MICROSENS

Product Manual | Firmware G6/ PLX

Version 10.8.4 / 12.8.2
Date 2026-02-13

Address
MICROSENS
GmbH & Co. KG
Küferstraße 16
59067 Hamm/Germany
www.microsens.com

Classification **MICROSENS PUBLICATION**

Table of Contents

1. Introduction
2. Command Line Interface (CLI)
3. System Access
4. Access Control List (ACL)
5. Web Manager
6. Simple Network Management Protocol (SNMP)
7. RADIUS Servers
8. Network Time Protocol (NTP)
9. File Operations
10. Event Messages (Syslog, SNMP Notifications)
11. System Event Manager
12. Miscellaneous
13. Factory Information
14. System Information
15. Hardware Information
16. IP Stack
17. Port-specific Functions
18. SFP Transceiver
19. Power-over-Ethernet (PoE)
20. MAC Table
21. Remote Monitoring (RMON)
22. Encryption
23. MSP 1000
24. SmartOffice
25. SmartOffice Controller
26. Wifi
27. Virtual LANs (VLANs)
28. Quality of Service (QoS)
29. Rapid Spanning Tree Protocol (RSTP)
30. Port-based Access Control
31. Multicast Traffic Filtering (IGMP Snooping)
32. Dynamic Host Configuration Protocol (DHCP)
33. Link Layer Discovery Protocol (LLDP)
34. Link Aggregation Control Protocol (LACP)
35. Ring
36. Message Queue Telemetry Transport (MQTT)
37. Modbus

©2026 MICROSENS GmbH & Co. KG - Hamm/Germany - www.microsens.com

38. Frequently Asked Questions
39. GNU General Public License v3
40. Disclaimer

©2026 MICROSENS GmbH & Co. KG - Hamm/Germany - www.microsens.com

1 Introduction

1.1 Scope of this Document

This document describes the detailed functionality of the firmware for MICROSENS G6 and G8 switch products. It does not describe hardware specific product features.

Some of the features or functions described in this document may not be available on all products, depending on the hardware capabilites of the individual device. Please consult the product's hardware data sheet for further reference.

Network Management Platform

Most of the firmware functions can be accessed via the MICROSENS Network Management Platform (NMP), which is a separate product. The description of NMP functionality in relationship with the firmware is beyond the scope this document. Please see the NMP Manual for further reference.

1.2 Intended Audience

This document is intended as handbook for network technicians and administrators involved with the installation, administration and maintenance of MICROSENS G6/G8 products.

1.3 Supported Products

The firmware G6/G8 described in this document supports the following hardware products:

Art.-No.	Description	Ports	Power
EQQ1032265	Micro Switch 6 ports Gigabit Eth., manageable, MicroSD card, PoE+, vert. mounting	Local: 4x 10/100/1000B-TX, EEE, PSE, RJ-45, Up: E2000 duplex, SM 1310nm, Down: 10/100/1000B-TX, PSE, RJ-45	DC (44-57V) max. 80W
EQQ1069013	Micro Switch 6 ports Gigabit Eth., manageable, MicroSD card, horiz. mounting	Local: 4x 10/100/1000B-TX, EEE, RJ-45, Up: E2000 duplex, SM 1310nm, Down: 10/100/1000B-TX, RJ-45	AC (230V) max. 10W
EQQ1069032	Micro Switch 6 ports Gigabit Eth., manageable, MicroSD card + internal Flash, horiz. mounting	Local: 4x 10/100/1000B-TX, EEE, RJ-45, Up: 100/1000B-X, SFP slot, Down: 10/100/1000B-TX, RJ-45	AC (230V) max. 10W
MS440200PM-48G6	Micro Switch 6 ports Gigabit Eth., manageable, MicroSD card, PoE+, horiz. mounting	Local: 4x 10/100/1000B-TX, EEE, PSE, RJ-45, Up: ST duplex, MM 850nm, Down: 10/100/1000B-TX, PSE, RJ-45	DC (44-57V) max. 80W
MS440201PM-48G6	Micro Switch 6 ports Gigabit Eth., manageable, MicroSD card, PoE+, horiz. mounting	Local: 4x 10/100/1000B-TX, EEE, PSE, RJ-45, Up: SC duplex, MM 850nm, Down: 10/100/1000B-TX, PSE, RJ-45	DC (44-57V) max. 80W
MS440202PM-48G6	Micro Switch 6 ports Gigabit Eth., manageable, MicroSD card, PoE+, horiz. mounting	Local: 4x 10/100/1000B-TX, EEE, PSE, RJ-45, Up: SC duplex, SM 1300nm, Down: 10/100/1000B-TX, PSE, RJ-45	DC (44-57V) max. 80W

©2026 MICROSENS GmbH & Co. KG - Hamm/Germany - www.microsens.com

MS440203PM-48G6	Micro Switch 6 ports Gigabit Eth., manageable, MicroSD card, PoE+, horiz. mounting	Local: 4x 10/100/1000B-TX, EEE, PSE, RJ-45, Up: ST duplex, SM 1300nm, Down: 10/100/1000B-TX, PSE, RJ-45	DC (44-57V) max. 80W
MS440207PM-48G6	Micro Switch 6 ports Gigabit Eth., manageable, MicroSD card, PoE+, horiz. mounting	Local: 4x 10/100/1000B-TX, EEE, PSE, RJ-45, Up: 2x 100/1000B-X, SFP slot, Down: -	DC (44-57V) max. 80W
MS440207PMX-48G6-GT	Ruggedized Micro Switch 6 ports Gigabit Eth., manageable, MicroSD card, PoE+, horiz. mounting, extended temperature range	Local: 4x 10/100/1000B-TX, EEE, PSE, RJ-45, Up: 2x 100/1000B-X, SFP slot, Down: -	DC (44-57V) max. 80W
MS440207PMXH-48G6	Ruggedized Micro Switch 6 ports Gigabit Eth., manageable, MicroSD card, PoE+, horiz. mounting, holder for DIN-rails, extended temperature range	Local: 4x 10/100/1000B-TX, EEE, PSE, RJ-45, Up: 2x 100/1000B-X, SFP slot, Down: -	DC (44-57V) max. 80W
MS440208PM-48G6	Micro Switch 6 ports Gigabit Eth., manageable, MicroSD card, PoE+, horiz. mounting	Local: 4x 10/100/1000B-TX, EEE, PSE, RJ-45, Up: 2x 100/1000B-X, Compact SFP Slot, Down: -	DC (44-57V) max. 80W
MS440208PMX-48G6-GT	Ruggedized Micro Switch 6 ports Gigabit Eth., manageable, MicroSD card, PoE+, horiz. mounting, extended temperature range	Local: 4x 10/100/1000B-TX, EEE, PSE, RJ-45, Up: 2x 100/1000B-X, Compact SFP Slot, Down: -	DC (44-57V) max. 80W
MS440208PMXH-48G6	Ruggedized Micro Switch 6 ports Gigabit Eth., manageable, MicroSD card, PoE+, horiz. mounting, holder for DIN-Rails, extended temperature range	Local: 4x 10/100/1000B-TX, EEE, PSE, RJ-45, Up: 2x 100/1000B-X, Compact SFP Slot, Down: -	DC (44-57V) max. 80W
MS440209PM-48G6	Micro Switch 6 ports Gigabit Eth., manageable, MicroSD card, PoE+, horiz. mounting	Local: 4x 10/100/1000B-TX, EEE, PSE, RJ-45, Up: 100/1000B-X, SFP slot, Down: 10/100/1000B-TX, PSE, RJ-45	DC (44-57V) max. 80W
MS440209PMX-48G6-GT	Ruggedized Micro Switch 6 ports Gigabit Eth., manageable, MicroSD card, PoE+, horiz. mounting, extended temperature range	Local: 4x 10/100/1000B-TX, EEE, PSE, RJ-45, Up: 100/1000B-X, SFP slot, Down: 10/100/1000B-TX, PSE, RJ-45	DC (44-57V) max. 80W
MS440209PMXH-48G6	Ruggedized Micro Switch 6 ports Gigabit Eth., manageable, MicroSD card, PoE+, horiz. mounting, holder for DIN-rails, extended temperature range	Local: 4x 10/100/1000B-TX, EEE, PSE, RJ-45, Up: 100/1000B-X, SFP slot, Down: 10/100/1000B-TX, PSE, RJ-45	DC (44-57V) max. 80W
MS450186PM-48G6	Micro Switch 6 ports Gigabit Eth., manageable, MicroSD card, PoE+, horiz. mounting	Local: 4x 10/100/1000B-TX, EEE, PSE, RJ-45, Up: 10/100/1000B-TX, PD, RJ-45, Down: 10/100/1000B-TX, PSE, RJ-45	DC (44-57V) max. 80W
MS450186MXH-G6+	Ruggedized Micro Switch 6 ports Gigabit Eth., manageable, MicroSD card + internal Flash, horiz. mounting, holder for DIN-rails, extended temperature range	Local: 4x 10/100/1000B-TX, EEE, PSE, RJ-45, Up: 10/100/1000B-TX, RJ-45, Down: 10/100/1000B-TX, RJ-45	AC (230V) max. 10W

MS450186MXH-24G6+	Ruggedized Micro Switch 6 ports Gigabit Eth., manageable, MicroSD card + internal Flash, horiz. mounting, holder for DIN-rails, extended temperature range	Local: 4x 10/100/1000B-TX, EEE, PSE, RJ-45, Up: 10/100/1000B-TX, RJ-45, Down: 10/100/1000B-TX, RJ-45	DC (20-57V) max. 10W
MS450186PMX-48G6	Ruggedized Micro Switch 6 ports Gigabit Eth., manageable, MicroSD card, PoE+, horiz. mounting, extended temperature range	Local: 4x 10/100/1000B-TX, EEE, PSE, RJ-45, Up: 10/100/1000B-TX, PD, RJ-45, Down: 10/100/1000B-TX, PSE, RJ-45	DC (44-57V) max. 80W
MS450186PMX-48G6+	Ruggedized Micro Switch 6 ports Gigabit Eth., manageable, MicroSD card + internal memory, PoE+, horiz. mounting, extended temperature range	Local: 4x 10/100/1000B-TX, EEE, PSE, RJ-45, Up: 10/100/1000B-TX, PD, RJ-45, Down: 10/100/1000B-TX, PSE, RJ-45	DC (44-57V) max. 80W
MS450186PMXH-48G6	Ruggedized Micro Switch 6 ports Gigabit Eth., manageable, MicroSD card, PoE+, horiz. mounting, holder for DIN-rails, extended temperature range	Local: 4x 10/100/1000B-TX, EEE, PSE, RJ-45, Up: 10/100/1000B-TX, PD, RJ-45, Down: 10/100/1000B-TX, PSE, RJ-45	DC (44-57V) max. 80W
MS450186PMXH-48G6+	Ruggedized Micro Switch 6 ports Gigabit Eth., manageable, MicroSD card + internal memory, PoE+, horiz. mounting, holder for DIN-rails, extended temperature range	Local: 4x 10/100/1000B-TX, EEE, PSE, RJ-45, Up: 10/100/1000B-TX, PD, RJ-45, Down: 10/100/1000B-TX, PSE, RJ-45	DC (44-57V) max. 80W
MS440210PM-48G6	Micro Switch 6 ports Gigabit Eth., manageable, MicroSD card, PoE+, vert. mounting	Local: 4x 10/100/1000B-TX, EEE, PSE, RJ-45, Up: ST duplex, MM 850nm, Down: 10/100/1000B-TX, PSE, RJ-45	DC (44-57V) max. 80W
MS440211PM-48G6	Micro Switch 6 ports Gigabit Eth., manageable, MicroSD card, PoE+, vert. mounting	Local: 4x 10/100/1000B-TX, EEE, PSE, RJ-45, Up: SC duplex, MM 850nm, Down: 10/100/1000B-TX, PSE, RJ-45	DC (44-57V) max. 80W
MS440212PM-48G6	Micro Switch 6 ports Gigabit Eth., manageable, MicroSD card, PoE+, vert. mounting	Local: 4x 10/100/1000B-TX, EEE, PSE, RJ-45, Up: SC duplex, SM 1300nm, Down: 10/100/1000B-TX, PSE, RJ-45	DC (44-57V) max. 80W
MS440213PM-48G6	Micro Switch 6 ports Gigabit Eth., manageable, MicroSD card, PoE+, vert. mounting	Local: 4x 10/100/1000B-TX, EEE, PSE, RJ-45, Up: ST duplex, SM 1300nm, Down: 10/100/1000B-TX, PSE, RJ-45	DC (44-57V) max. 80W
MS440217PM-48G6	Micro Switch 6 ports Gigabit Eth., manageable, MicroSD card, PoE+, vert. mounting	Local: 4x 10/100/1000B-TX, EEE, PSE, RJ-45, Up: 2x 100/1000B-X, SFP slots, Down: -	DC (44-57V) max. 80W
MS440217PMX-48G6-GT	Ruggedized Micro Switch 6 ports Gigabit Eth., manageable, MicroSD card, PoE+, vert. mounting, extended temperature range	Local: 4x 10/100/1000B-TX, EEE, PSE, RJ-45, Up: 2x 100/1000B-X, SFP slots, Down: -	DC (44-57V) max. 80W
MS440217PMXH-48G6	Ruggedized Micro Switch 6 ports Gigabit Eth., manageable, MicroSD card, PoE+, vert. mounting, holder for DIN-rails, extended temperature range	Local: 4x 10/100/1000B-TX, EEE, PSE, RJ-45, Up: 2x 100/1000B-X, SFP slots, Down: -	DC (44-57V) max. 80W

©2026 MICROSENS GmbH & Co. KG - Hamm/Germany - www.microsens.com

MS440217MX-12G6	Ruggedized Micro Switch 6 ports Gigabit Eth., manageable, MicroSD card, vert. mounting, extended temperature range	Local: 4x 10/100/1000B-TX, EEE, RJ-45, Up: 2x 100/1000B-X, SFP slots, Down: -	DC (12V) max. 10W
MS440217MXH-G6	Ruggedized Micro Switch 6 ports Gigabit Eth., manageable, MicroSD card, vert. mounting, holder for DIN-rails, extended temperature range	Local: 4x 10/100/1000B-TX, EEE, RJ-45, Up: 2x 100/1000B-X, SFP slots, Down: -	AC (230V) max. 10W
MS440217MXH-24G6	Ruggedized Micro Switch 6 ports Gigabit Eth., manageable, MicroSD card, vert. mounting, holder for DIN-rails, extended temperature range	Local: 4x 10/100/1000B-TX, EEE, RJ-45, Up: 2x 100/1000B-X, SFP slots, Down: -	DC (24V) max. 10W
MS440218PM-48G6	Micro Switch 6 ports Gigabit Eth., manageable, MicroSD card, PoE+, vert. mounting	Local: 4x 10/100/1000B-TX, EEE, PSE, RJ-45, Up: 2x 100/1000B-X, Compact SFP Slot, Down: -	DC (44-57V) max. 80W
MS440218PMX-48G6-GT	Ruggedized Micro Switch 6 ports Gigabit Eth., manageable, MicroSD card, PoE+, vert. mounting, extended temperature range	Local: 4x 10/100/1000B-TX, EEE, PSE, RJ-45, Up: 2x 100/1000B-X, Compact SFP Slot, Down: -	DC (44-57V) max. 80W
MS440218PMXH-48G6	Ruggedized Micro Switch 6 ports Gigabit Eth., manageable, MicroSD card, PoE+, vert. mounting, holder for DIN-Rails, extended temperature range	Local: 4x 10/100/1000B-TX, EEE, PSE, RJ-45, Up: 2x 100/1000B-X, Compact SFP Slot, Down: -	DC (44-57V) max. 80W
MS440219PM-48G6	Micro Switch 6 ports Gigabit Eth., manageable, MicroSD card, PoE+, vert. mounting	Local: 4x 10/100/1000B-TX, EEE, PSE, RJ-45, Up: 100/1000B-X, SFP slot, Down: 10/100/1000B-TX, PSE, RJ-45	DC (44-57V) max. 80W
MS440219PMX-48G6-GT	Ruggedized Micro Switch 6 ports Gigabit Eth., manageable, MicroSD card, PoE+, vert. mounting, extended temperature range	Local: 4x 10/100/1000B-TX, EEE, PSE, RJ-45, Up: 100/1000B-X, SFP slot, Down: 10/100/1000B-TX, PSE, RJ-45	DC (44-57V) max. 80W
MS440219PMXH-48G6	Ruggedized Micro Switch 6 ports Gigabit Eth., manageable, MicroSD card, PoE+, vert. mounting, holder for DIN-rails, extended temperature range	Local: 4x 10/100/1000B-TX, EEE, PSE, RJ-45, Up: 100/1000B-X, SFP slot, Down: 10/100/1000B-TX, PSE, RJ-45	DC (44-57V) max. 80W
MS450187PM-48G6	Micro Switch 6 ports Gigabit Eth., manageable, MicroSD card, PoE+, vert. mounting	Local: 4x 10/100/1000B-TX, EEE, PSE, RJ-45, Up: 10/100/1000B-TX, PD, RJ-45, Down: 10/100/1000B-TX, PSE, RJ-45	DC (44-57V) max. 80W
MS450187PMX-48G6	Ruggedized Micro Switch 6 ports Gigabit Eth., manageable, MicroSD card, PoE+, vert. mounting, extended temperature range	Local: 4x 10/100/1000B-TX, EEE, PSE, RJ-45, Up: 10/100/1000B-TX, PD, RJ-45, Down: 10/100/1000B-TX, PSE, RJ-45	DC (44-57V) max. 80W
MS450187PMX-48G6+	Ruggedized Micro Switch 6 ports Gigabit Eth., manageable, MicroSD card + internal memory, PoE+, vert. mounting, extended temperature range	Local: 4x 10/100/1000B-TX, EEE, PSE, RJ-45, Up: 10/100/1000B-TX, PD, RJ-45, Down: 10/100/1000B-TX, PSE, RJ-45	DC (44-57V) max. 80W

MS450187PMXH-48G6	Ruggedized Micro Switch 6 ports Gigabit Eth., manageable, MicroSD card, PoE+, vert. mounting, holder for DIN-rails, extended temperature range	Local: 4x 10/100/1000B-TX, EEE, PSE, RJ-45, Up: 10/100/1000B-TX, PD, RJ-45, Down: 10/100/1000B-TX, PSE, RJ-45	DC (44-57V) max. 80W
MS450187PMXH-48G6+	Ruggedized Micro Switch 6 ports Gigabit Eth., manageable, MicroSD card + internal memory, PoE+, vert. mounting, holder for DIN-rails, extended temperature range	Local: 4x 10/100/1000B-TX, EEE, PSE, RJ-45, Up: 10/100/1000B-TX, PD, RJ-45, Down: 10/100/1000B-TX, PSE, RJ-45	DC (44-57V) max. 80W
MS440200M-G6	Micro Switch 6 ports Gigabit Eth., manageable, MicroSD card, horiz. mounting	Local: 4x 10/100/1000B-TX, EEE, RJ-45, Up: ST duplex, MM 850nm, Down: 10/100/1000B-TX, RJ-45	AC (230V) max. 10W
MS440201M-G6	Micro Switch 6 ports Gigabit Eth., manageable, MicroSD card, horiz. mounting	Local: 4x 10/100/1000B-TX, EEE, RJ-45, Up: SC duplex, MM 850nm, Down: 10/100/1000B-TX, RJ-45	AC (230V) max. 10W
MS440202M-G6	Micro Switch 6 ports Gigabit Eth., manageable, MicroSD card, horiz. mounting	Local: 4x 10/100/1000B-TX, EEE, RJ-45, Up: SC duplex, SM 1300nm, Down: 10/100/1000B-TX, RJ-45	AC (230V) max. 10W
MS440203M-G6	Micro Switch 6 ports Gigabit Eth., manageable, MicroSD card, horiz. mounting	Local: 4x 10/100/1000B-TX, EEE, RJ-45, Up: ST duplex, SM 1300nm, Down: 10/100/1000B-TX, RJ-45	AC (230V) max. 10W
MS440207M-G6	Micro Switch 6 ports Gigabit Eth., manageable, MicroSD card, horiz. mounting	Local: x 10/100/1000B-TX, EEE, RJ-45, Up: 2x 100/1000B-X, SFP slot, Down: -	AC (230V) max. 10W
MS440208M-G6	Micro Switch 6 ports Gigabit Eth., manageable, MicroSD card, horiz. mounting	Local: 4x 10/100/1000B-TX, EEE, PSE, RJ-45, Up: 2x 100/1000B-X, Compact SFP Slot, Down: -	AC (230V) max. 10W
MS440209M-G6	Micro Switch 6 ports Gigabit Eth., manageable, MicroSD card, horiz. mounting	Local: 4x 10/100/1000B-TX, EEE, RJ-45, Up: 100/1000B-X, SFP slot, Down: 10/100/1000B-TX, RJ-45	AC (230V) max. 10W
MS450186M-G6	Micro Switch 6 ports Gigabit Eth., manageable, MicroSD card, horiz. mounting	Local: 4x 10/100/1000B-TX, EEE, RJ-45, Up: 10/100/1000B-TX, RJ-45, Down: 10/100/1000B-TX, RJ-45	AC (230V) max. 10W
MS440210M-G6	Micro Switch 6 ports Gigabit Eth., manageable, MicroSD card, vert. mounting	Local: 4x 10/100/1000B-TX, EEE, RJ-45, Up: ST duplex, MM 850nm, Down: 10/100/1000B-TX, RJ-45	AC (230V) max. 10W
MS440211M-G6	Micro Switch 6 ports Gigabit Eth., manageable, MicroSD card, vert. mounting	Local: 4x 10/100/1000B-TX, EEE, RJ-45, Up: SC duplex, MM 850nm, Down: 10/100/1000B-TX, RJ-45	AC (230V) max. 10W
MS440212M-G6	Micro Switch 6 ports Gigabit Eth., manageable, MicroSD card, vert. mounting	Local: 4x 10/100/1000B-TX, EEE, RJ-45, Up: SC duplex, SM 1300nm, Down: 10/100/1000B-TX, RJ-45	AC (230V) max. 10W
MS440213M-G6	Micro Switch 6 ports Gigabit Eth., manageable, MicroSD card, vert. mounting	Local: 4x 10/100/1000B-TX, EEE, RJ-45, Up: ST duplex, SM 1300nm, Down: 10/100/1000B-TX, RJ-45	AC (230V) max. 10W
MS440217M-G6	Micro Switch 6 ports Gigabit Eth., manageable, MicroSD card, vert. mounting	Local: 4x 10/100/1000B-TX, EEE, RJ-45, Up: 2x 100/1000B-X, SFP slots, Down: -	AC (230V) max. 10W
MS440218M-G6	Micro Switch 6 ports Gigabit Eth., manageable, MicroSD card, vert. mounting	Local: 4x 10/100/1000B-TX, EEE, RJ-45, Up: 2x 100/1000B-X, Compact SFP Slot, Down: -	AC (230V) max. 10W
MS440219M-G6	Micro Switch 6 ports Gigabit Eth., manageable, MicroSD card, vert. mounting	Local: 4x 10/100/1000B-TX, EEE, RJ-45, Up: 100/1000B-X, SFP slot, Down: 10/100/1000B-TX, RJ-45	AC (230V) max. 10W

©2026 MICROSENS GmbH & Co. KG - Hamm/Germany - www.microsens.com

MS450187M-G6	Micro Switch 6 ports Gigabit Eth., manageable, MicroSD card, vert. mounting	Local: 4x 10/100/1000B-TX, EEE, RJ-45, Up: 10/100/1000B-TX, RJ-45, Down: 10/100/1000B-TX, RJ-45	AC (230V) max. 10W
MS450187MXH-G6+	Ruggedized Micro Switch 6 ports Gigabit Eth., manageable, MicroSD card + internal Flash, vert. mounting, holder for DIN-rails, extended temperature range	Local: 4x 10/100/1000B-TX, EEE, PSE, RJ-45, Up: 10/100/1000B-TX, RJ-45, Down: 10/100/1000B-TX, RJ-45	AC (230V) max. 10W
MS450187MXH-24G6+	Ruggedized Micro Switch 6 ports Gigabit Eth., manageable, MicroSD card + internal Flash, vert. mounting, holder for DIN-rails, extended temperature range	Local: 4x 10/100/1000B-TX, EEE, PSE, RJ-45, Up: 10/100/1000B-TX, RJ-45, Down: 10/100/1000B-TX, RJ-45	DC (20-57V) max. 10W
MS440200PM-48G6+	Micro Switch 6 ports Gigabit Eth., manageable, MicroSD card + internal Flash, PoE+, horiz. mounting	Local: 4x 10/100/1000B-TX, EEE, PSE, RJ-45, Up: ST duplex, MM 850nm, Down: 10/100/1000B-TX, PSE, RJ-45	DC (44-57V) max. 80W
MS440201PM-48G6+	Micro Switch 6 ports Gigabit Eth., manageable, MicroSD card + internal Flash, PoE+, horiz. mounting	Local: 4x 10/100/1000B-TX, EEE, PSE, RJ-45, Up: SC duplex, MM 850nm, Down: 10/100/1000B-TX, PSE, RJ-45	DC (44-57V) max. 80W
MS440202PM-48G6+	Micro Switch 6 ports Gigabit Eth., manageable, MicroSD card + internal Flash, PoE+, horiz. mounting	Local: 4x 10/100/1000B-TX, EEE, PSE, RJ-45, Up: SC duplex, SM 1300nm, Down: 10/100/1000B-TX, PSE, RJ-45	DC (44-57V) max. 80W
MS440203PM-48G6+	Micro Switch 6 ports Gigabit Eth., manageable, MicroSD card + internal Flash, PoE+, horiz. mounting	Local: 4x 10/100/1000B-TX, EEE, PSE, RJ-45, Up: ST duplex, SM 1300nm, Down: 10/100/1000B-TX, PSE, RJ-45	DC (44-57V) max. 80W
MS440207PM-48G6+	Micro Switch 6 ports Gigabit Eth., manageable, MicroSD card + internal Flash, PoE+, horiz. mounting	Local: 4x 10/100/1000B-TX, EEE, PSE, RJ-45, Up: 2x 100/1000B-X, SFP slot, Down: -	DC (44-57V) max. 80W
MS440207PMX-48G6+GT	Ruggedized Micro Switch 6 ports Gigabit Eth., manageable, MicroSD card + internal Flash, PoE+, horiz. mounting, extended temperature range	Local: 4x 10/100/1000B-TX, EEE, PSE, RJ-45, Up: 2x 100/1000B-X, SFP slot, Down: -	DC (44-57V) max. 80W
MS440207PMXH-48G6+	Ruggedized Micro Switch 6 ports Gigabit Eth., manageable, MicroSD card + internal Flash, PoE+, horiz. mounting, holder for DIN-rails, extended temperature range	Local: 4x 10/100/1000B-TX, EEE, PSE, RJ-45, Up: 2x 100/1000B-X, SFP slot, Down: -	DC (44-57V) max. 80W
MS440208PM-48G6+	Micro Switch 6 ports Gigabit Eth., manageable, MicroSD card + internal Flash, PoE+, horiz. mounting	Local: 4x 10/100/1000B-TX, EEE, PSE, RJ-45, Up: 2x 100/1000B-X, Compact SFP Slot, Down: -	DC (44-57V) max. 80W
MS440208PMX-48G6+GT	Ruggedized Micro Switch 6 ports Gigabit Eth., manageable, MicroSD card + internal Flash, PoE+, horiz. mounting, extended temperature range	Local: 4x 10/100/1000B-TX, EEE, PSE, RJ-45, Up: 2x 100/1000B-X, Compact SFP Slot, Down: -	DC (44-57V) max. 80W

MS440208PMXH-48G6+	Ruggedized Micro Switch 6 ports Gigabit Eth., manageable, MicroSD card + internal Flash, PoE+, horiz. mounting, holder for DIN-Rails, extended temperature range	Local: 4x 10/100/1000B-TX, EEE, PSE, RJ-45, Up: 2x 100/1000B-X, Compact SFP Slot, Down: -	DC (44-57V) max. 80W
MS440209PM-48G6+	Micro Switch 6 ports Gigabit Eth., manageable, MicroSD card + internal Flash, PoE+, horiz. mounting	Local: 4x 10/100/1000B-TX, EEE, PSE, RJ-45, Up: 100/1000B-X, SFP slot, Down: 10/100/1000B-TX, PSE, RJ-45	DC (44-57V) max. 80W
MS440209PMX-48G6+GT	Ruggedized Micro Switch 6 ports Gigabit Eth., manageable, MicroSD card + internal Flash, PoE+, horiz. mounting, extended temperature range	Local: 4x 10/100/1000B-TX, EEE, PSE, RJ-45, Up: 100/1000B-X, SFP slot, Down: 10/100/1000B-TX, PSE, RJ-45	DC (44-57V) max. 80W
MS440209PMXH-48G6+	Ruggedized Micro Switch 6 ports Gigabit Eth., manageable, MicroSD card + internal Flash, PoE+, horiz. mounting, holder for DIN-rails, extended temperature range	Local: 4x 10/100/1000B-TX, EEE, PSE, RJ-45, Up: 100/1000B-X, SFP slot, Down: 10/100/1000B-TX, PSE, RJ-45	DC (44-57V) max. 80W
MS440209MXH-24G6+	Ruggedized Micro Switch 6 ports Gigabit Eth., manageable, MicroSD card + internal Flash, horiz. mounting, holder for DIN-rails, extended temperature range	Local: 4x 10/100/1000B-TX, EEE, RJ-45, Up: 100/1000B-X, SFP slot, Down: 10/100/1000B-TX, RJ-45	DC (24V) max. 10W
MS440210PM-48G6+	Micro Switch 6 ports Gigabit Eth., manageable, MicroSD card + internal Flash, PoE+, vert. mounting	Local: 4x 10/100/1000B-TX, EEE, PSE, RJ-45, Up: ST duplex, MM 850nm, Down: 10/100/1000B-TX, PSE, RJ-45	DC (44-57V) max. 80W
MS440211PM-48G6+	Micro Switch 6 ports Gigabit Eth., manageable, MicroSD card + internal Flash, PoE+, vert. mounting	Local: 4x 10/100/1000B-TX, EEE, PSE, RJ-45, Up: SC duplex, MM 850nm, Down: 10/100/1000B-TX, PSE, RJ-45	DC (44-57V) max. 80W
MS440212PM-48G6+	Micro Switch 6 ports Gigabit Eth., manageable, MicroSD card + internal Flash, PoE+, vert. mounting	Local: 4x 10/100/1000B-TX, EEE, PSE, RJ-45, Up: SC duplex, SM 1300nm, Down: 10/100/1000B-TX, PSE, RJ-45	DC (44-57V) max. 80W
MS440213PM-48G6+	Micro Switch 6 ports Gigabit Eth., manageable, MicroSD card + internal Flash, PoE+, vert. mounting	Local: 4x 10/100/1000B-TX, EEE, PSE, RJ-45, Up: ST duplex, SM 1300nm, Down: 10/100/1000B-TX, PSE, RJ-45	DC (44-57V) max. 80W
MS440217PM-48G6+	Micro Switch 6 ports Gigabit Eth., manageable, MicroSD card + internal Flash, PoE+, vert. mounting	Local: 4x 10/100/1000B-TX, EEE, PSE, RJ-45, Up: 2x 100/1000B-X, SFP slot, Down: -	DC (44-57V) max. 80W
MS440217PMX-48G6+GT	Ruggedized Micro Switch 6 ports Gigabit Eth., manageable, MicroSD card + internal Flash, PoE+, vert. mounting, extended temperature range	Local: 4x 10/100/1000B-TX, EEE, PSE, RJ-45, Up: 2x 100/1000B-X, SFP slots, Down: -	DC (44-57V) max. 80W
MS440217PMXH-48G6+	Ruggedized Micro Switch 6 ports Gigabit Eth., manageable, MicroSD card + internal Flash, PoE+, vert. mounting, holder for DIN-rails, extended temperature range	Local: 4x 10/100/1000B-TX, EEE, PSE, RJ-45, Up: 2x 100/1000B-X, SFP slots, Down: -	DC (44-57V) max. 80W

©2026 MICROSENS GmbH & Co. KG - Hamm/Germany - www.microsens.com

MS440217MXH-G6+	Ruggedized Micro Switch 6 ports Gigabit Eth., manageable, MicroSD card + internal Flash, vert. mounting, holder for DIN-rails, extended temperature range	Local: 4x 10/100/1000B-TX, EEE, RJ-45, Up: 2x 100/1000B-X, SFP slots, Down: -	AC (230V) max. 10W
MS440217MXH-24G6+	Ruggedized Micro Switch 6 ports Gigabit Eth., manageable, MicroSD card + internal Flash, vert. mounting, holder for DIN-rails, extended temperature range	Local: 4x 10/100/1000B-TX, EEE, RJ-45, Up: 2x 100/1000B-X, SFP slots, Down: -	DC (24V) max. 10W
MS440218PM-48G6+	Micro Switch 6 ports Gigabit Eth., manageable, MicroSD card + internal Flash, PoE+, vert. mounting	Local: 4x 10/100/1000B-TX, EEE, PSE, RJ-45, Up: 2x 100/1000B-X, Compact SFP Slot, Down: -	DC (44-57V) max. 80W
MS440218PMX-48G6+GT	Ruggedized Micro Switch 6 ports Gigabit Eth., manageable, MicroSD card + internal Flash, PoE+, vert. mounting, extended temperature range	Local: 4x 10/100/1000B-TX, EEE, PSE, RJ-45, Up: 2x 100/1000B-X, Compact SFP Slot, Down: -	DC (44-57V) max. 80W
MS440218PMXH-48G6+	Ruggedized Micro Switch 6 ports Gigabit Eth., manageable, MicroSD card + internal Flash, PoE+, vert. mounting, holder for DIN-Rails, extended temperature range	Local: 4x 10/100/1000B-TX, EEE, PSE, RJ-45, Up: 2x 100/1000B-X, Compact SFP Slot, Down: -	DC (44-57V) max. 80W
MS440219PM-48G6+	Micro Switch 6 ports Gigabit Eth., manageable, MicroSD card + internal Flash, PoE+, vert. mounting	Local: 4x 10/100/1000B-TX, EEE, PSE, RJ-45, Up: 100/1000B-X, SFP slot, Down: 10/100/1000B-TX, PSE, RJ-45	DC (44-57V) max. 80W
MS440219PMX-48G6+GT	Ruggedized Micro Switch 6 ports Gigabit Eth., manageable, MicroSD card + internal Flash, PoE+, vert. mounting, extended temperature range	Local: 4x 10/100/1000B-TX, EEE, PSE, RJ-45, Up: 100/1000B-X, SFP slot, Down: 10/100/1000B-TX, PSE, RJ-45	DC (44-57V) max. 80W
MS440219PMXH-48G6+	Ruggedized Micro Switch 6 ports Gigabit Eth., manageable, MicroSD card + internal Flash, PoE+, vert. mounting, holder for DIN-rails, extended temperature range	Local: 4x 10/100/1000B-TX, EEE, PSE, RJ-45, Up: 100/1000B-X, SFP slot, Down: 10/100/1000B-TX, PSE, RJ-45	DC (44-57V) max. 80W
MS440219MXH-24G6+	Ruggedized Micro Switch 6 ports Gigabit Eth., manageable, MicroSD card + internal Flash, vert. mounting, holder for DIN-rails, extended temperature range	Local: 4x 10/100/1000B-TX, EEE, RJ-45, Up: 100/1000B-X, SFP slot, Down: 10/100/1000B-TX, RJ-45	DC (24V) max. 10W
MS440219MXH-G6+	Ruggedized Micro Switch 6 ports Gigabit Eth., manageable, MicroSD card + internal Flash, vert. mounting, holder for DIN-rails, extended temperature range	Local: 4x 10/100/1000B-TX, EEE, RJ-45, Up: 100/1000B-X, SFP slot, Down: 10/100/1000B-TX, RJ-45	AC (230V) max. 10W
MS445186PM-48G6+	Medical Micro Switch 6 ports Gigabit Eth., manageable, MicroSD card + internal Flash, horiz. mounting	Local: 4x 10/100/1000B-TX, EEE, RJ-45, Up: 10/100/1000B-TX, PoE+ PD, RJ-45, Down: 10/100/1000B-TX, PoE+ PSE, RJ-45	DC (44-57V) max. 30W

MS445207M-48G6+	Medical Micro Switch, 6 ports Gigabit Eth., manageable, MicroSD card + internal Flash, horiz. mounting	Local: 4x 10/100/1000B-TX, EEE, RJ-45, Up: 2x 100/1000B-X, SFP slot, Down: -	DC (44-57V) max. 10W
MS445207M-48G6	Medical Micro Switch, 6 ports Gigabit Eth., manageable, MicroSD card, horiz. mounting	Local: 4x 10/100/1000B-TX, EEE, RJ-45, Up: 2x 100/1000B-X, SFP slot, Down: -	DC (44-57V) max. 10W
MS445207M-G6+	Medical Micro Switch, 6 ports Gigabit Eth., manageable, MicroSD card + internal Flash, horiz. mounting	Local: 4x 10/100/1000B-TX, EEE, RJ-45, Up: 2x 100/1000B-X, SFP slot, Down: -	AC (230V) max. 10W
MS445207M-G6	Medical Micro Switch, 6 ports Gigabit Eth., manageable, MicroSD card, horiz. mounting	Local: 4x 10/100/1000B-TX, EEE, RJ-45, Up: 2x 100/1000B-X, SFP slot, Down: -	AC (230V) max. 10W
MS445209M-48G6+	Medical Micro Switch, 6 ports Gigabit Eth., manageable, MicroSD card + internal Flash, horiz. mounting	Local: 4x 10/100/1000B-TX, EEE, RJ-45, Up: 1x 100/1000B-X, SFP slot, Down: 10/100/1000B-TX, PSE, RJ-45	DC (44-57V) max. 10W
MS445209M-48G6	Medical Micro Switch, 6 ports Gigabit Eth., manageable, MicroSD card, horiz. mounting	Local: 4x 10/100/1000B-TX, EEE, RJ-45, Up: 1x 100/1000B-X, SFP slot, Down: 10/100/1000B-TX, PSE, RJ-45	DC (44-57V) max. 10W
MS445209M-G6+	Medical Micro Switch, 6 ports Gigabit Eth., manageable, MicroSD card + internal Flash, horiz. mounting	Local: 4x 10/100/1000B-TX, EEE, RJ-45, Up: 1x 100/1000B-X, SFP slot, Down: 10/100/1000B-TX, RJ-45	AC (230V) max. 10W
MS445209PM-48G6+	Medical Micro Switch, 6 ports Gigabit Eth., manageable, MicroSD card + internal Flash, horiz. mounting	Local: 4x 10/100/1000B-TX, EEE, RJ-45, Up: 1x 100/1000B-X, SFP slot, Down: 10/100/1000B-TX, PSE, RJ-45	DC (44-57V) max. 10W
MS450186PM-48G6+	Micro Switch 6 ports Gigabit Eth., manageable, MicroSD card + internal Flash, PoE+, horiz. mounting	Local: 4x 10/100/1000B-TX, EEE, PSE, RJ-45, Up: 10/100/1000B-TX, PD, RJ-45, Down: 10/100/1000B-TX, PSE, RJ-45	DC (44-57V) max. 80W
MS450187PM-48G6+	Micro Switch 6 ports Gigabit Eth., manageable, MicroSD card + internal Flash, PoE+, vert. mounting	Local: 4x 10/100/1000B-TX, EEE, PSE, RJ-45, Up: 10/100/1000B-TX, PD, RJ-45, Down: 10/100/1000B-TX, PSE, RJ-45	DC (44-57V) max. 80W
MS440200M-G6+	Micro Switch 6 ports Gigabit Eth., manageable, MicroSD card + internal Flash, horiz. mounting	Local: 4x 10/100/1000B-TX, EEE, RJ-45, Up: ST duplex, MM 850nm, Down: 10/100/1000B-TX, RJ-45	AC (230V) max. 10W
MS440201M-G6+	Micro Switch 6 ports Gigabit Eth., manageable, MicroSD card + internal Flash, horiz. mounting	Local: 4x 10/100/1000B-TX, EEE, RJ-45, Up: SC duplex, MM 850nm, Down: 10/100/1000B-TX, RJ-45	AC (230V) max. 10W
MS440202M-G6+	Micro Switch 6 ports Gigabit Eth., manageable, MicroSD card + internal Flash, horiz. mounting	Local: 4x 10/100/1000B-TX, EEE, RJ-45, Up: SC duplex, SM 1300nm, Down: 10/100/1000B-TX, RJ-45	AC (230V) max. 10W
MS440203M-G6+	Micro Switch 6 ports Gigabit Eth., manageable, MicroSD card + internal Flash, horiz. mounting	Local: 4x 10/100/1000B-TX, EEE, RJ-45, Up: ST duplex, SM 1300nm, Down: 10/100/1000B-TX, RJ-45	AC (230V) max. 10W
MS440207M-G6+	Micro Switch 6 ports Gigabit Eth., manageable, MicroSD card + internal Flash, horiz. mounting	Local: 4x 10/100/1000B-TX, EEE, RJ-45, Up: 2x 100/1000B-X, SFP slot, Down: -	AC (230V) max. 10W
MS440208M-G6+	Micro Switch 6 ports Gigabit Eth., manageable, MicroSD card + internal Flash, horiz. mounting	Local: 4x 10/100/1000B-TX, EEE, RJ-45, Up: 2x 100/1000B-X, Compact SFP Slot, Down: -	AC (230V) max. 10W

©2026 MICROSENS GmbH & Co. KG - Hamm/Germany - www.microsens.com

MS440209M-G6+	Micro Switch 6 ports Gigabit Eth., manageable, MicroSD card + internal Flash, horiz. mounting	Local: 4x 10/100/1000B-TX, EEE, RJ-45, Up: 100/1000B-X, SFP slot, Down: 10/100/1000B-TX, RJ-45	AC (230V) max. 10W
MS450186M-G6+	Micro Switch 6 ports Gigabit Eth., manageable, MicroSD card + internal Flash, horiz. mounting	Local: 4x 10/100/1000B-TX, EEE, RJ-45, Up: 10/100/1000B-TX, RJ-45, Down: 10/100/1000B-TX, RJ-45	AC (230V) max. 10W
MS440210M-G6+	Micro Switch 6 ports Gigabit Eth., manageable, MicroSD card + internal Flash, vert. mounting	Local: 4x 10/100/1000B-TX, EEE, RJ-45, Up: ST duplex, MM 850nm, Down: 10/100/1000B-TX, RJ-45	AC (230V) max. 10W
MS440211M-G6+	Micro Switch 6 ports Gigabit Eth., manageable, MicroSD card + internal Flash, vert. mounting	Local: 4x 10/100/1000B-TX, EEE, RJ-45, Up: SC duplex, MM 850nm, Down: 10/100/1000B-TX, RJ-45	AC (230V) max. 10W
MS440212M-G6+	Micro Switch 6 ports Gigabit Eth., manageable, MicroSD card + internal Flash, vert. mounting	Local: 4x 10/100/1000B-TX, EEE, RJ-45, Up: SC duplex, SM 1300nm, Down: 10/100/1000B-TX, RJ-45	AC (230V) max. 10W
MS440213M-G6+	Micro Switch 6 ports Gigabit Eth., manageable, MicroSD card + internal Flash, vert. mounting	Local: 4x 10/100/1000B-TX, EEE, RJ-45, Up: ST duplex, SM 1300nm, Down: 10/100/1000B-TX, RJ-45	AC (230V) max. 10W
MS440217M-G6+	Micro Switch 6 ports Gigabit Eth., manageable, MicroSD card + internal Flash, vert. mounting	Local: 4x 10/100/1000B-TX, EEE, RJ-45, Up: 2x 100/1000B-X, SFP slots, Down: -	AC (230V) max. 10W
MS440218M-G6+	Micro Switch 6 ports Gigabit Eth., manageable, MicroSD card + internal Flash, vert. mounting	Local: 4x 10/100/1000B-TX, EEE, RJ-45, Up: 2x 100/1000B-X, Compact SFP Slot, Down: -	AC (230V) max. 10W
MS440219M-24G6+	Micro Switch 6 ports Gigabit Eth., manageable, MicroSD card + internal Flash, vert. mounting	Local: 4x 10/100/1000B-TX, EEE, RJ-45, Up: 100/1000B-X, SFP slot, Down: 10/100/1000B-TX, RJ-45	DC (24V) max. 10W
MS440219M-G6+	Micro Switch 6 ports Gigabit Eth., manageable, MicroSD card + internal Flash, vert. mounting	Local: 4x 10/100/1000B-TX, EEE, RJ-45, Up: 100/1000B-X, SFP slot, Down: 10/100/1000B-TX, RJ-45	AC (230V) max. 10W
MS450187M-G6+	Micro Switch 6 ports Gigabit Eth., manageable, MicroSD card + internal Flash, vert. mounting	Local: 4x 10/100/1000B-TX, EEE, RJ-45, Up: 10/100/1000B-TX, RJ-45, Down: 10/100/1000B-TX, RJ-45	AC (230V) max. 10W
MS450330M-G6+	Micro Switch 6 ports Fast Eth., manageable, MicroSD card + internal Flash, horiz. mounting	Local: 4x 10/100B-TX, EEE, RJ-45, Up: ST duplex, MM 1310nm, Down: 10/100B-TX, RJ-45	AC (230V) max. 10W
MS450330PM-48G6+	Micro Switch 6 ports Fast Eth., manageable, MicroSD card + internal Flash, horiz. mounting	Local: 4x 10/100B-TX, EEE, RJ-45, Up: ST duplex, MM 1310nm, Down: 10/100B-TX, RJ-45	DC (44-57V) max. 80W
MS450331M-G6+	Micro Switch 6 ports Fast Eth., manageable, MicroSD card + internal Flash, horiz. mounting	Local: 4x 10/100B-TX, EEE, RJ-45, Up: SC duplex, MM 1310nm, Down: 10/100B-TX, RJ-45	AC (230V) max. 10W
MS450331PM-48G6+	Micro Switch 6 ports Fast Eth., manageable, MicroSD card + internal Flash, horiz. mounting	Local: 4x 10/100B-TX, EEE, RJ-45, Up: SC duplex, MM 1310nm, Down: 10/100B-TX, RJ-45	DC (44-57V) max. 80W
MS450340M-G6+	Micro Switch 6 ports Fast Eth., manageable, MicroSD card + internal Flash, vert. mounting	Local: 4x 10/100B-TX, EEE, RJ-45, Up: ST duplex, MM 1310nm, Down: 10/100B-TX, RJ-45	AC (230V) max. 10W

©2026 MICROSENS GmbH & Co. KG - Hamm/Germany - www.microsens.com

MS450340PM-48G6+	Micro Switch 6 ports Fast Eth., manageable, MicroSD card + internal Flash, vert. mounting	Local: 4x 10/100B-TX, EEE, RJ-45, Up: ST duplex, MM 1310nm, Down: 10/100B-TX, RJ-45	DC (44-57V) max. 80W
MS450341M-G6+	Micro Switch 6 ports Fast Eth., manageable, MicroSD card + internal Flash, vert. mounting	Local: 4x 10/100B-TX, EEE, RJ-45, Up: SC duplex, MM 1310nm, Down: 10/100B-TX, RJ-45	AC (230V) max. 10W
MS450341PM-48G6+	Micro Switch 6 ports Fast Eth., manageable, MicroSD card + internal Flash, vert. mounting	Local: 4x 10/100B-TX, EEE, RJ-45, Up: SC duplex, MM 1310nm, Down: 10/100B-TX, RJ-45	DC (44-57V) max. 80W
MS453501PM-G6	Desktop Switch 6 Ports Gigabit Eth., manageable, MicroSD card, PoE	Local: 4x 10/100/1000B-TX, EEE, PoE (PSE), RJ-45, Up: 100/1000B-X, SFP slot, Down: 10/100/1000B-TX, RJ-45	AC (230V) max. 80W
MS453501M-48G6	Desktop Switch 6 Ports Gigabit Eth., manageable, MicroSD card	Local: 4x 10/100/1000B-TX, EEE, RJ-45, Up: 100/1000B-X, SFP slot, Down: 10/100/1000B-TX, RJ-45	DC (44-57V) max. 20W
MS453501PM-G6+	Desktop Switch 6 Ports Gigabit Eth., manageable, MicroSD card + internal Flash, PoE	Local: 4x 10/100/1000B-TX, EEE, PoE (PSE), RJ-45, Up: 100/1000B-X, SFP slot, Down: 10/100/1000B-TX, RJ-45	AC (230V) max. 80W
MS453501M-48G6+	Desktop Switch 6 Ports Gigabit Eth., manageable, MicroSD card + internal Flash	Local: 4x 10/100/1000B-TX, EEE, RJ-45, Up: 100/1000B-X, SFP slot, Down: 10/100/1000B-TX, RJ-45	DC (44-57V) max. 80W
MS453501PM-48G6	Desktop Switch 6 Ports Gigabit Eth., manageable, MicroSD card, PoE	Local: 4x 10/100/1000B-TX, EEE, PoE (PSE), RJ-45, Up: 100/1000B-X, SFP slot, Down: 10/100/1000B-TX, RJ-45	DC (44-57V) max. 80W
MS453501PM-48G6+	Desktop Switch 6 Ports Gigabit Eth., manageable, MicroSD card + internal Flash, PoE	Local: 4x 10/100/1000B-TX, EEE, PoE (PSE), RJ-45, Up: 100/1000B-X, SFP slot, Down: 10/100/1000B-TX, RJ-45	DC (44-57V) max. 80W
MS453502PM-G6	Desktop Switch 6 Ports Gigabit Eth., manageable, MicroSD card, PoE+	Local: 4x 10/100/1000B-TX, EEE, PoE+ (PSE), RJ-45, Up: 100/1000B-X, SFP slot, Down: 10/100/1000B-TX, RJ-45	AC (230V) max. 80W
MS453502PM-G6+	Desktop Switch 6 Ports Gigabit Eth., manageable, MicroSD card + internal Flash, PoE+	Local: 4x 10/100/1000B-TX, EEE, PoE+ (PSE), RJ-45, Up: 100/1000B-X, SFP slot, Down: 10/100/1000B-TX, RJ-45	AC (230V) max. 80W
MS453502PM-48G6	Desktop Switch 6 Ports Gigabit Eth., manageable, MicroSD card, PoE+	Local: 4x 10/100/1000B-TX, EEE, PoE+ (PSE), RJ-45, Up: 100/1000B-X, SFP slot, Down: 10/100/1000B-TX, RJ-45	DC (44-57V) max. 80W
MS453502PM-48G6+	Desktop Switch 6 Ports Gigabit Eth., manageable, MicroSD card + internal Flash, PoE+	Local: 4x 10/100/1000B-TX, EEE, PoE+ (PSE), RJ-45, Up: 100/1000B-X, SFP slot, Down: 10/100/1000B-TX, RJ-45	DC (44-57V) max. 80W
MS453502PMX-48G6+	Ruggedized Desktop Switch 6 Ports Gigabit Eth., manageable, MicroSD card + internal Flash, PoE+	Local: 4x 10/100/1000B-TX, EEE, PoE+ (PSE), RJ-45, Up: 100/1000B-X, SFP slot, Down: 10/100/1000B-TX, RJ-45	DC (44-57V) max. 80W
MS453503PM-48G6	Desktop Switch 6 Ports Gigabit Eth., manageable, MicroSD card, PoE	Local: 4x 10/100/1000B-TX, EEE, PoE (PSE), RJ-45, Up: 100/1000B-X, SFP slot, Down: 10/100/1000B-TX, RJ-45	DC (44-57V) max. 80W
MS453504PM-G6	Desktop Switch 6 Ports Gigabit Eth., manageable, MicroSD card, PoE+	Local: 4x 10/100/1000B-TX, EEE, PoE+ (PSE), RJ-45, Up: 100/1000B-X, SFP slot, Down: 10/100/1000B-TX, RJ-45	AC (230V) max. 80W

©2026 MICROSENS GmbH & Co. KG - Hamm/Germany - www.microsens.com

MS453504PM-G6+	Desktop Switch 6 Ports Gigabit Eth., manageable, MicroSD card + internal Flash, PoE+	Local: 4x 10/100/1000B-TX, EEE, PoE+ (PSE), RJ-45, Up: 100/1000B-X, SFP slot, Down: 10/100/1000B-TX, RJ-45	AC (230V) max. 80W
MS453504PM-48G6	Desktop Switch 6 Ports Gigabit Eth., manageable, MicroSD card, PoE+	Local: 4x 10/100/1000B-TX, EEE, PoE+ (PSE), RJ-45, Up: 100/1000B-X, SFP slot, Down: 10/100/1000B-TX, RJ-45	DC (44-57V) max. 80W
MS453504PM-48G6+	Desktop Switch 6 Ports Gigabit Eth., manageable, MicroSD card + internal Flash, PoE+	Local: 4x 10/100/1000B-TX, EEE, PoE+ (PSE), RJ-45, Up: 100/1000B-X, SFP slot, Down: 10/100/1000B-TX, RJ-45	DC (44-57V) max. 80W
MS650919PM	Industrial Gigabit Switch PL+, 7 Ethernet-Ports, SD card, Serial Port, I/O-Ports: 2x in, 2x out,	4x 10/100/1000B-TX, PoE+ (PSE), RJ-45, 1x 10/100/1000B-TX, PoE+ (PD), RJ-45, 2x Dual Media: 100/1000B-X, SFP slot or 10/100/1000B-TX, RJ-45, 1x USB, 2x I/O	2x DC Input 24-57VDC, redundant, max. 200W
MS650919PM-BS	Industrial Gigabit Switch PL+, 7 Ethernet-Ports, SD card, Serial Port, I/O-Ports: 2x in, 2x out, Railway, Substation	4x 10/100/1000B-TX, PoE+ (PSE), RJ-45, 1x 10/100/1000B-TX, PoE+ (PD), RJ-45, 2x Dual Media: 100/1000B-X, SFP slot or 10/100/1000B-TX, RJ-45, 1x USB, 2x I/O	2x DC Input 24-57VDC, redundant, max. 200W
MS650929PM	Industrial Gigabit Switch PL+, 7 Ethernet-Ports, SD card, Serial Port, I/O-Ports: 2x in, 2x out,	4x 10/100/1000B-TX, 2x 60W PoE+ (PSE), RJ-45, 1x 10/100/1000B-TX, PoE+ (PD), RJ-45, 2x Dual Media: 100/1000B-X, SFP slot or 10/100/1000B-TX, RJ-45, 1x USB, 2x I/O	2x DC Input 24-57VDC, redundant, max. 200W
MS652119PM	Industrial Gigabit Switch PLM, 13 Ethernet-Ports, SD card, Serial Port, I/O-Ports: 2x in, 2x out, Expansion-Bus: 1x out	8x 10/100/1000B-TX, PoE+ (PSE), RJ-45, 1x 10/100/1000B-TX, PoE+ (PD), RJ-45, 4x Dual Media: 100/1000B-X, SFP slot or 10/100/1000B-TX, RJ-45, 1x USB, 2x I/O	2x DC Input 24-57VDC, redundant, max. 200W
MS652119PM-V2	Industrial Gigabit Switch PLM, 13 Ethernet-Ports, SD card, Serial Port, I/O-Ports: 2x in, 2x out, Expansion-Bus: 1x out	8x 10/100/1000B-TX, PoE+ (PSE), RJ-45, 1x 10/100/1000B-TX, PoE+ (PD), RJ-45, 4x Dual Media: 100/1000B-X, SFP slot or 10/100/1000B-TX, RJ-45, 1x USB, 2x I/O	2x DC Input 24-57VDC, redundant, max. 240W
MS652119PM-B	Industrial Gigabit Switch PLM, 13 Ethernet-Ports, SD card, Serial Port, I/O-Ports: 2x in, 2x out, Expansion-Bus: 1x out, Railway	8x 10/100/1000B-TX, PoE+ (PSE), RJ-45, 1x 10/100/1000B-TX, PoE+ (PD), RJ-45, 4x Dual Media: 100/1000B-X, SFP slot or 10/100/1000B-TX, RJ-45, 1x USB, 2x I/O	2x DC Input 24-57VDC, redundant, max. 200W
MS652119PM-BS	Industrial Gigabit Switch PLM, 13 Ethernet-Ports, SD card, Serial Port, I/O-Ports: 2x in, 2x out, Expansion-Bus: 1x out, Railway, Substation	8x 10/100/1000B-TX, PoE+ (PSE), RJ-45, 1x 10/100/1000B-TX, PoE+ (PD), RJ-45, 4x Dual Media: 100/1000B-X, SFP slot or 10/100/1000B-TX, RJ-45, 1x USB, 2x I/O	2x DC Input 24-57VDC, redundant, max. 60W
MS652129PM	Industrial Gigabit Switch PLM, 13 Ethernet-Ports, SD card, Serial Port, I/O-Ports: 2x in, 2x out, Expansion-Bus: 1x out	8x 10/100/1000B-TX, 4x 60W PoE+ (PSE), RJ-45, 1x 10/100/1000B-TX, PoE+ (PD), RJ-45, 4x Dual Media: 100/1000B-X, SFP slot or 10/100/1000B-TX, RJ-45, 1x USB, 2x I/O	2x DC Input 24-57VDC, redundant, max. 200W

MS652159PM	Industrial Gigabit Switch PLM, 13 Ethernet-Ports, SD card, Serial Port, I/O-Ports: 2x in, 2x out, Expansion-Bus: 1x out	8x 10/100/1000B-TX, 4x 60W PoE+ (PSE), RJ-45, 1x 10/100/1000B-TX, PoE+ (PD), RJ-45, 4x Dual Media: 100/1000B-X, SFP slot or 10/100/1000B-TX, RJ-45, 1x USB, 2x I/O	1x DC Input 24-57VDC, max. 480W
MS652219M	Profi Line Modular (PLM) 6 Port Expansion Module	4x 10/100/1000B-TX, PoE+ (PSE), RJ-45, 2x Dual Media: 100/1000B-X, SFP slot or 10/100/1000B-TX, RJ-45	
MS652419M	Profi Line Modular (PLM) 12 Port Expansion Module	8x 10/100/1000B-TX, PoE+ (PSE), RJ-45, 4x Dual Media: 100/1000B-X, SFP slot or 10/100/1000B-TX, RJ-45	
MS652615M	Industrial 10 Gigabit Ethernet Switch PLX, 9 Ethernet Ports, SD card, Serial Port, I/O-Ports: 2x in, 2x out	6x 10/100/1000B-TX, RJ-45, 1x 10/100/1000B-TX, PoE+ (PD), RJ-45, 2x 1G/10G SFP/SFP+ slots, 1x USB	2x DC Input 24-57VDC, redundant, max. 25W
MS652619MX	8-Port 10G Industrial Switch, managed, DIN-Rail, USB-A, SD-Slot, 2x I/O, console port (USB-C)	2x 1/10GBase-X SFP+-Slots, 6x 10/100/1000T	2x DC Input 12..36VDC, redundant, max. 20W
MS652619PMX	8-Port 10G Industrial Switch, PoE+, managed, DIN-Rail, USB-A, SD-Slot, 2x I/O, console port (USB-C)	2x 1/10GBase-X SFP+-Slots, 6x 10/100/1000T PoE+	2x DC Input 24..57VDC, redundant, max. 255W
MS652629PMX	8-Port 10G Industrial Switch, PoE++, managed, DIN-Rail, USB-A, SD-Slot, 2x I/O, console port (USB-C)	2x 1/10GBase-X SFP+-Slots, 6x 10/100/1000T, thereof 3x PoE++	2x DC Input 24..57VDC, redundant, max. 255W
MS652719PMX	16-Port 10G Industrial Switch, PoE+, managed, DIN-Rail, USB-A, SD-Slot, 2x I/O, console port (USB-C)	4x 1/10GBase-X SFP+-Slots, 12x 10/100/1000T PoE+	2x DC Input 24..57VDC, redundant, max. 500W
MS652719MX	16-Port 10G Industrial Switch, managed, DIN-Rail, USB-A, SD-Slot, 2x I/O, console port (USB-C)	4x 1/10GBase-X SFP+-Slots, 12x 10/100/1000T	2x DC Input 12..36VDC, redundant, max. 30W
MS652729PMX	16-Port 10G Industrial Switch, PoE++, managed, DIN-Rail, USB-A, SD-Slot, 2x I/O, console port (USB-C)	4x 1/10GBase-X SFP+-Slots, 12x 10/100/1000T, thereof 6x PoE++	2x DC Input 24..57VDC, redundant, max. 500W
MS652819PMX	16-Port 10G Industrial Switch Multigigabit PoE+/++, managed, DIN-Rail, USB-A, SD-Slot, 2x I/O, console port (USB-C)	4x 1/10GBase-X SFP+-Slots, thereof 2x 1/2.5/5/10GBase-T Combo PoE++, 12x 10/100/1000T PoE+	2x DC Input 24..57VDC, redundant, max. 500W
MS652829PMX	16-Port 10G Industrial Switch, Multigigabit, PoE++, managed, DIN-Rail, USB-A, SD-Slot, 2x I/O, console port (USB-C)	4x 1/10GBase-X SFP+-Slots, thereof 2x 1/2.5/5/10GBase-T Combo PoE++, 12x 10/100/1000T, davon 6x PoE++	2x DC Input 24..57VDC, redundant, max. 500W
MS400890MX	Ruggedized 19" Gigabit Switch PLR, 25 Ethernet-Ports, SD card, Serial Port, I/O-Ports: 2x in, 2x out	16x 10/100/1000B-TX, PoE+ (PSE), RJ-45, 1x 10/100/1000B-TX, PoE+ (PD), RJ-45, 8x Dual Media: 100/1000B-X, SFP slot or 10/100/1000B-TX, RJ-45, 1x USB, 2x I/O	2x DC Input 24-57VDC, redundant, max. 200W
MS400890MX-V2	Ruggedized 19" Gigabit Switch PLR, 25 Ethernet-Ports, SD card, Serial Port, I/O-Ports: 2x in, 2x out	16x 10/100/1000B-TX, PoE+ (PSE), RJ-45, 1x 10/100/1000B-TX, PoE+ (PD), RJ-45, 8x Dual Media: 100/1000B-X, SFP slot or 10/100/1000B-TX, RJ-45, 1x USB, 2x I/O	2x DC Input 24-57VDC, redundant, max. 240W

©2026 MICROSENS GmbH & Co. KG - Hamm/Germany - www.microsens.com

MS400890MX-BS	Ruggedized 19" Gigabit Switch PLR, 25 Ethernet-Ports, SD card, Serial Port, I/O-Ports: 2x in, 2x out, Railway, Substation	16x 10/100/1000B-TX, PoE+ (PSE), RJ-45, 1x 10/100/1000B-TX, PoE+ (PD), RJ-45, 8x Dual Media: 100/1000B-X, SFP slot or 10/100/1000B-TX, RJ-45, 1x USB, 2x I/O	2x DC Input 24-57VDC, redundant, max. 200W
MS400895MX	Ruggedized 19" Gigabit Switch PLR, 25 Ethernet-Ports, SD card, Serial Port, I/O-Ports: 2x in, 2x out	16x 10/100/1000B-TX, PoE+ (PSE), RJ-45, 1x 10/100/1000B-TX, PoE+ (PD), RJ-45, 8x Dual Media: 100/1000B-X, SFP slot or 10/100/1000B-TX, RJ-45, 1x USB, 2x I/O	1x DC Input 24-57VDC, redundant, max. 480W
MS425523M	NM3 Management Agent Module for MSP 1000 Platform, SNMP, Web-Server, 4 Ethernet-Ports, MicroSD card, Console Port, 2x SFP Slots	2x 10/100/1000B-TX, RJ-45, 1x RS-232 (RJ-45), 2x 100/1000B-X, SFP slot	
MS425524M	NM3+ Management Agent Module for MSP 1000 Platform, SNMP, Web-Server, 6 Ethernet-Ports, MicroSD card, Console Port, 2x SFP Slots, I/O-Ports: 2x in, 2x out	4x 10/100/1000B-TX, RJ-45, 1x RS-232 (RJ-45), 2x 100/1000B-X, SFP slot, 1x USB, 2x I/O	
MS660301M	Central Smart Lighting Controller, Mgmt, SD card, 1x GBE/FE, 24x LED RJ45, 4x Sensor RJ45, 2x Input, 2x Output	1x 10/100/1000B-TX, 24x LED RJ45, 4x Sensor RJ45, 2x Input, 2x Output	2x DC Input 54VDC, redundant, max. 1000W
MS660301M-V2	Central Smart Lighting Controller, Mgmt, SD card, 1x GBE/FE, 24x LED RJ45, 4x Sensor RJ45, 2x Input, 2x Output, Fan	1x 10/100/1000B-TX, 24x LED RJ45, 4x Sensor RJ45, 2x Input, 2x Output	2x DC Input 54VDC, redundant, max. 1000W
MS660301M-V4	Central Smart Lighting Controller, Mgmt, SD card, 3x FE Uplink, 24x LED, 2x Sensor Inputs, Fan	3x 10/100B-TX, 24x LED RJ45, 2x Sensor RJ45	1x DC Input 54VDC

1.4 Document Structure

This document describes each firmware subject in a separate section – beginning with the different ways to manage the switch (for instance: 'CLI', 'System Access', 'Web Manager', 'SNMP'), followed by the hard- and software features of the device (for instance: 'Factory', 'Hardware', 'SFPs', 'POE') and the available protocols (for instance: 'VLAN', 'QOS', 'RSTP', 'PACC').

Key Features

This section lists and decribes the key features of the feature-group.

Functional Description

This section describes and explaines the concept and functionality of the feature-group.

CLI Command Reference

This section lists all parameters applicable for the feature-group and gives the possible access modes ('Read Only', 'Read/Write' or 'Executable Action'). For each group the path in the CLI is provided. When navigating in the CLI, with this path from the root the individual parameter can be addressed. See 'Command Line Interface (CLI)' section of this manual for further reference.

©2026 MICROSENS GmbH & Co. KG - Hamm/Germany - www.microsens.com

Configuration Parameters

This section lists all configuration parameters provided by the feature-group and shows all possible values a configuration parameter can adopt as well as the object identifier (OID), which is needed to configure the parameter by SNMP. See 'Simple Network Management Protocol (SNMP)' section of this manual for further reference.

The parameters may be arranged in groups or lists. For each list the size of the index is provided.

Configuration values can be written and control the behaviour of individual features. Configuration values are stored device internally in configuration files (per feature-section). These files can be accessed for backup and restore purposes. See 'File Operations' section of this manual for further reference.

Status Parameters

This section lists all status parameters provided by the feature-group and shows all possible values a status parameter can adopt as well as the object identifier (OID), which is needed to access the parameter by SNMP. See 'Simple Network Management Protocol (SNMP)' section of this manual for further reference. Status values are read-only and refer to internal states of the device.

1.5 Default User Accounts

The following user accounts are predefined:

Username	Password	Access Permissions
admin	administrator	Read / Write
user	microsens	Read / Write (limited)
public	microsens	Read Only

See 'System Access' section of this manual for further reference.

1.6 Device Interface Reference

As the firmware supports different hardware models, the following sections define the location and designations of all interfaces used by the firmware for the individual models.

©2026 MICROSENS GmbH & Co. KG - Hamm/Germany - www.microsens.com

Interface definitions for Micro Switch (incl. ruggedized version), horizontal mounting:

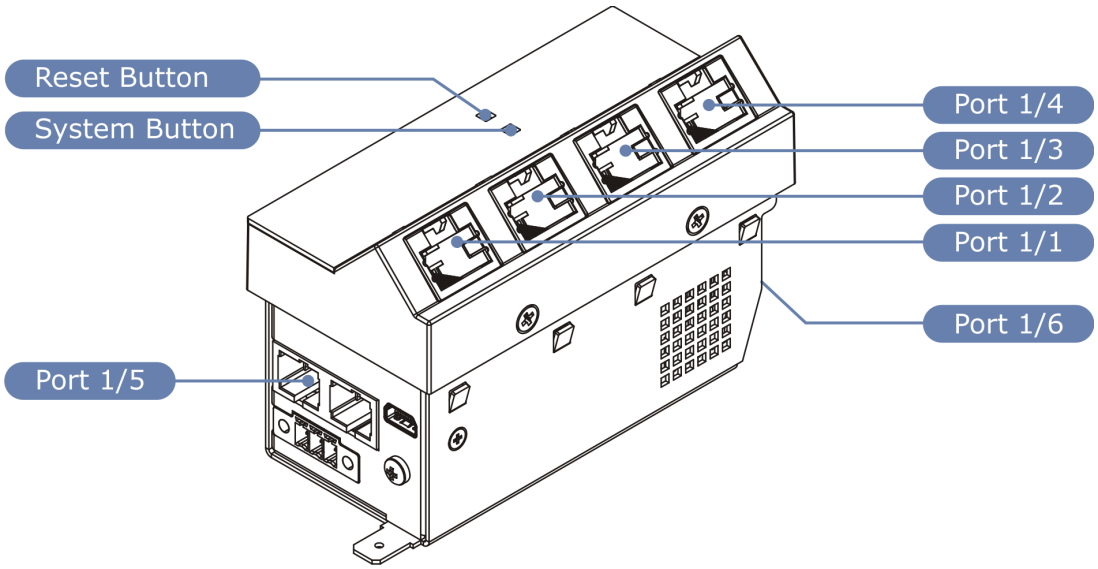

Interface definitions for Micro Switch (incl. ruggedized version), vertical mounting:

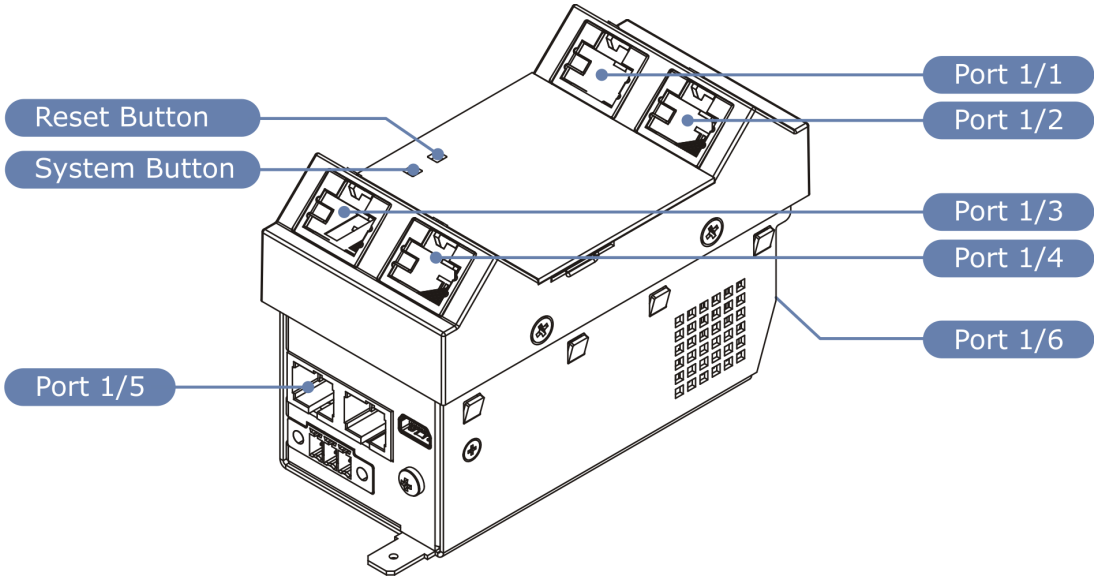

©2026 MICROSENS GmbH & Co. KG - Hamm/Germany - www.microsens.com

Interface definitions for Desktop Switch:

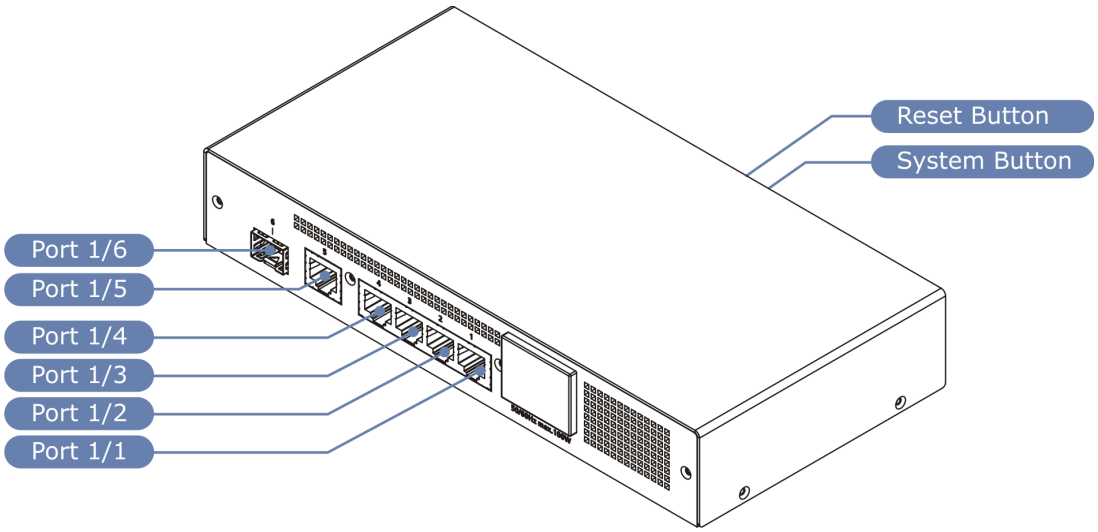

Interface definitions for Industrial 19" Switch Profi Line Rack (PLR):

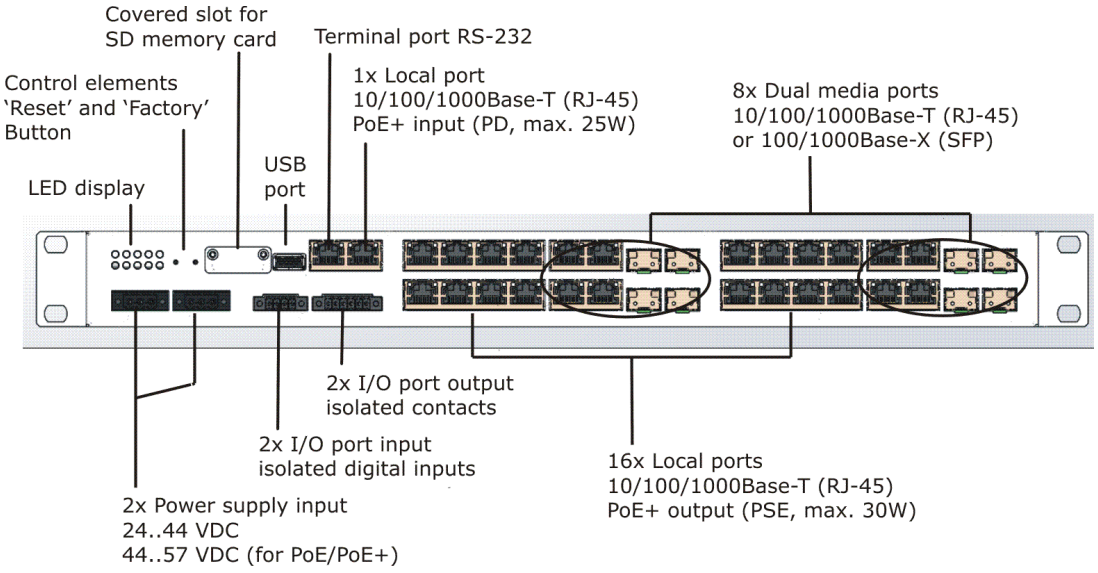

©2026 MICROSENS GmbH & Co. KG - Hamm/Germany - www.microsens.com

Interface definitions for Industrial Switch Profi Line + (PL+):

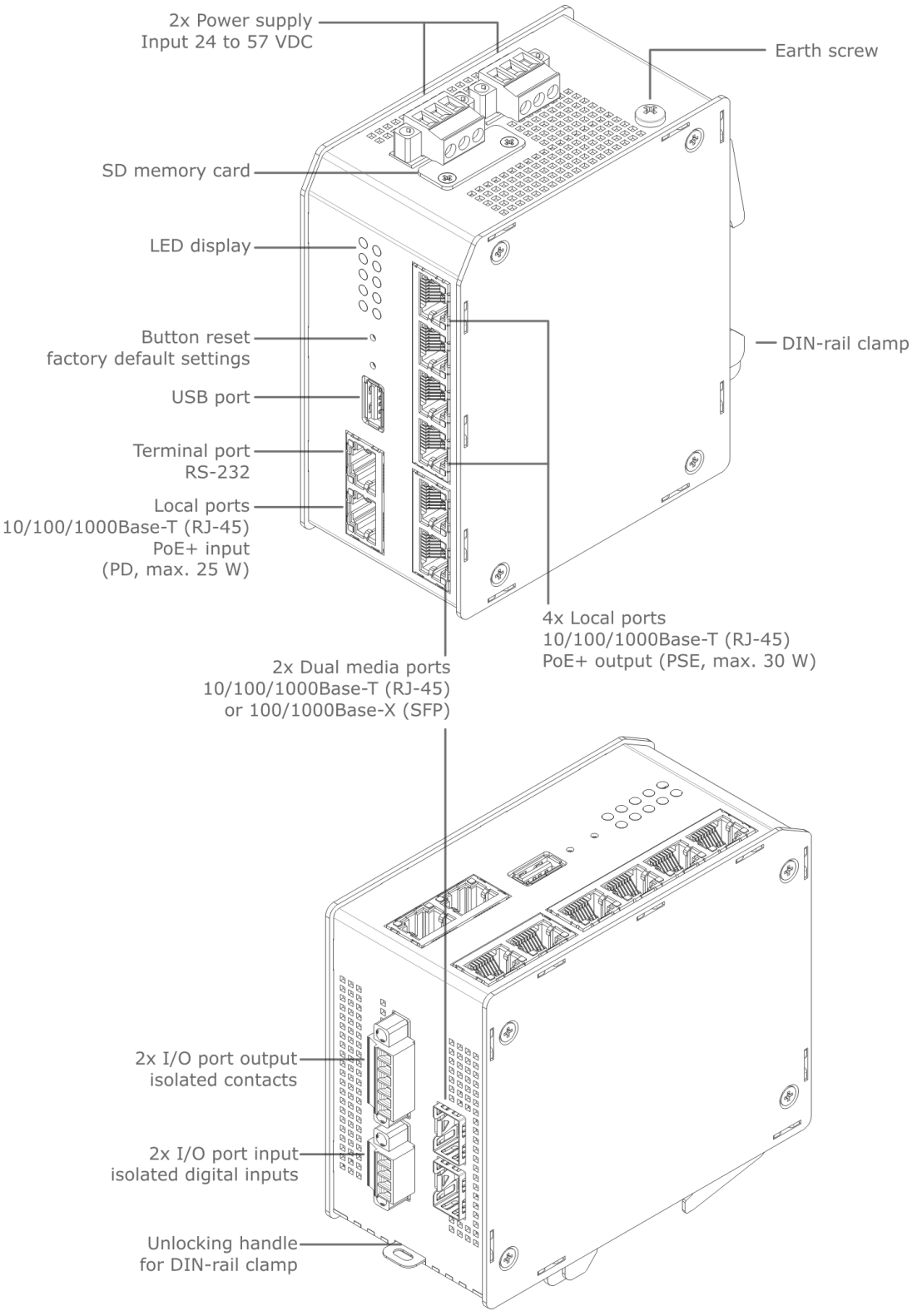

©2026 MICROSENS GmbH & Co. KG - Hamm/Germany - www.microsens.com

Interface definitions for Industrial Switch Profi Line Modular (PLM):

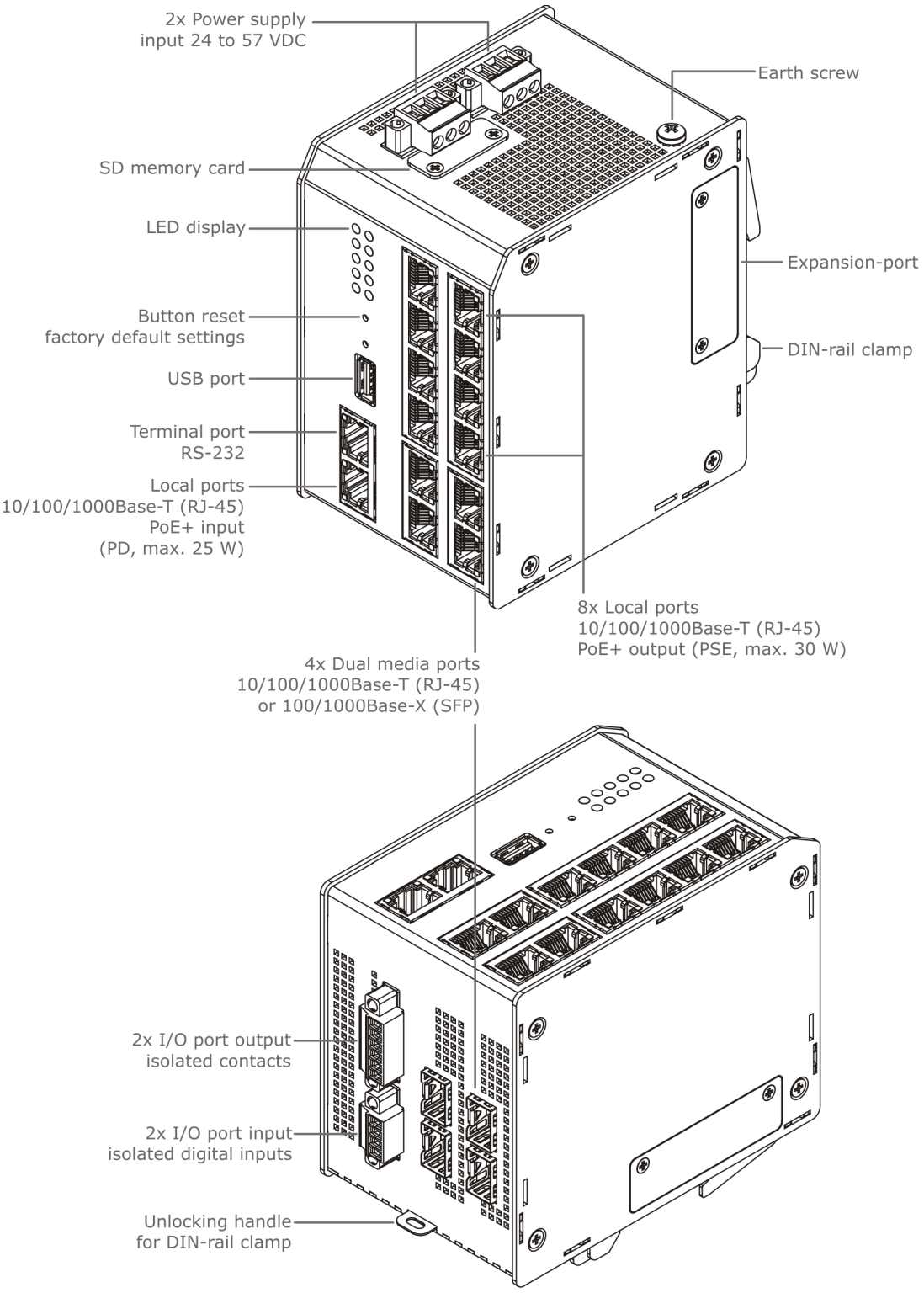

©2026 MICROSENS GmbH & Co. KG - Hamm/Germany - www.microsens.com

Interface definitions for Industrial Switch Profi Line 10G:

©2026 MICROSENS GmbH & Co. KG - Hamm/Germany - www.microsens.com

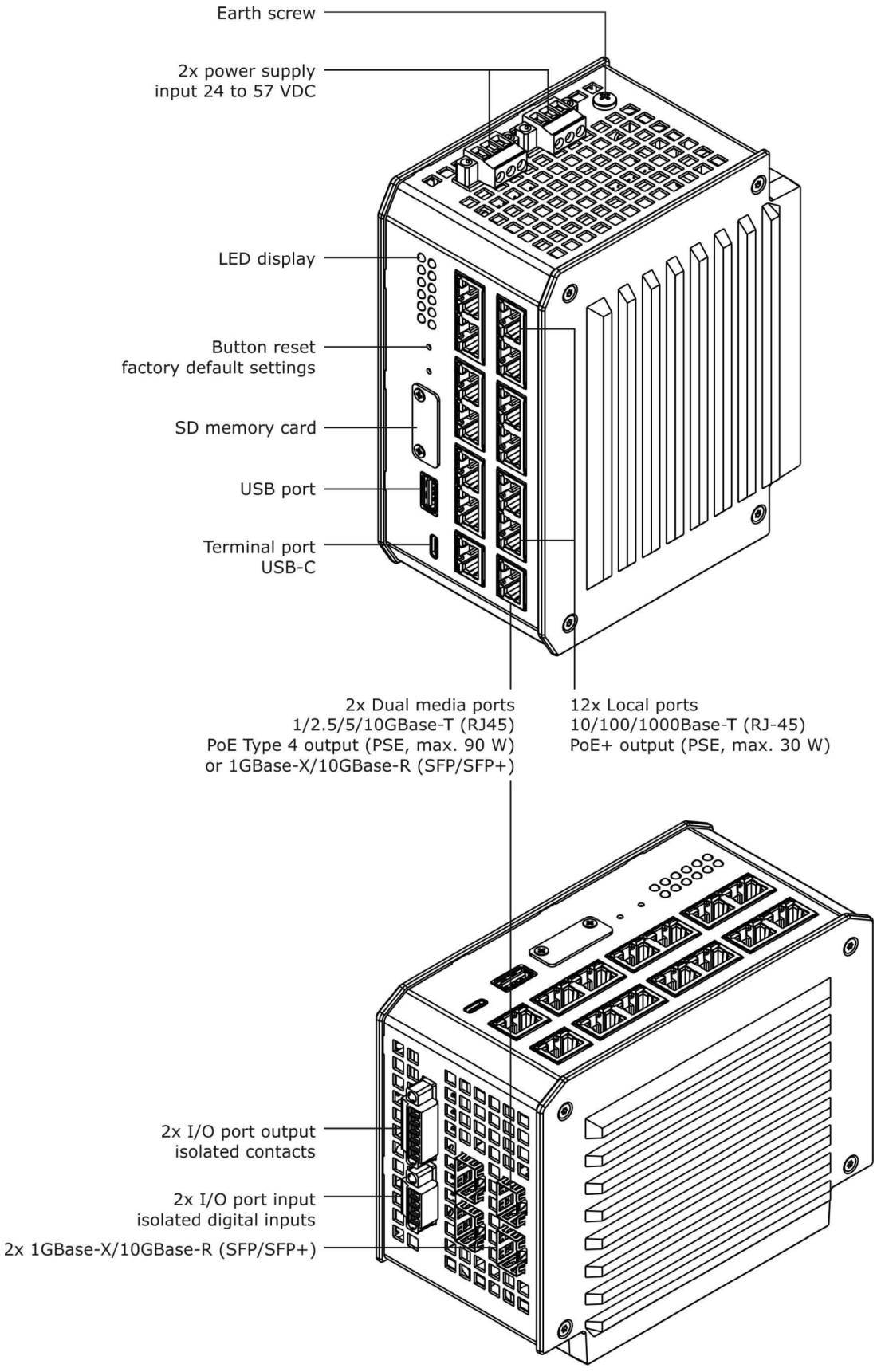

©2026 MICROSENS GmbH & Co. KG - Hamm/Germany - www.microsens.com

Interface definitions for MSP 1000 Network Management Agents (NM3 and NM3+):

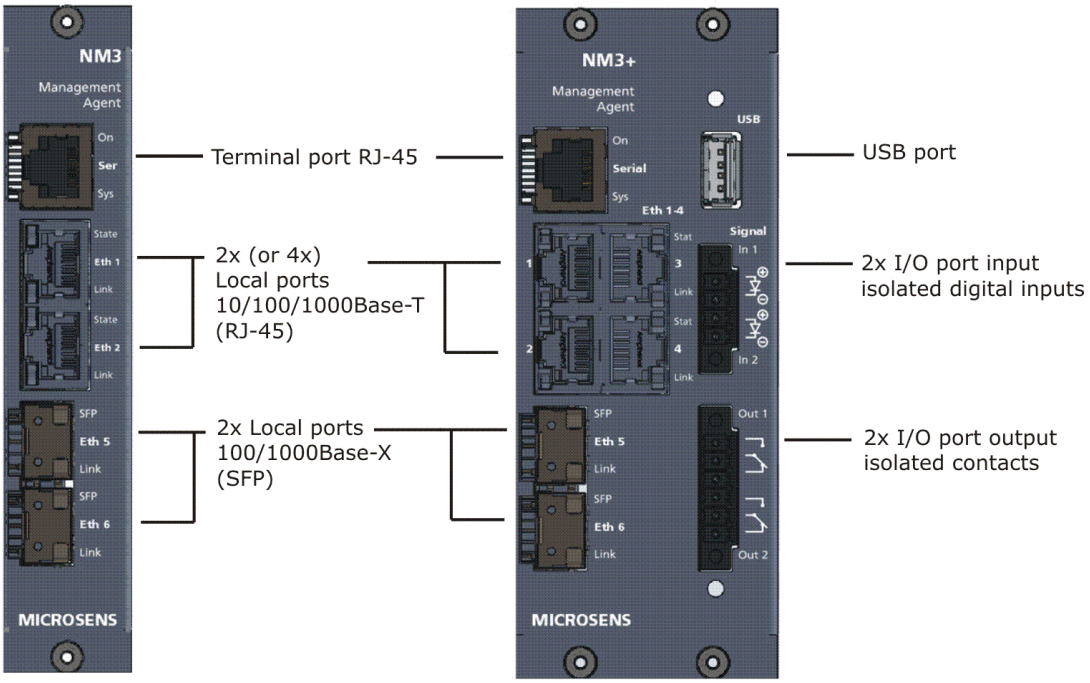

1.7 System Button Reset Sequence

The 'System' button provides different functionalities when pressed. The 'sys' LED changes display to indicate action performed when button is released.

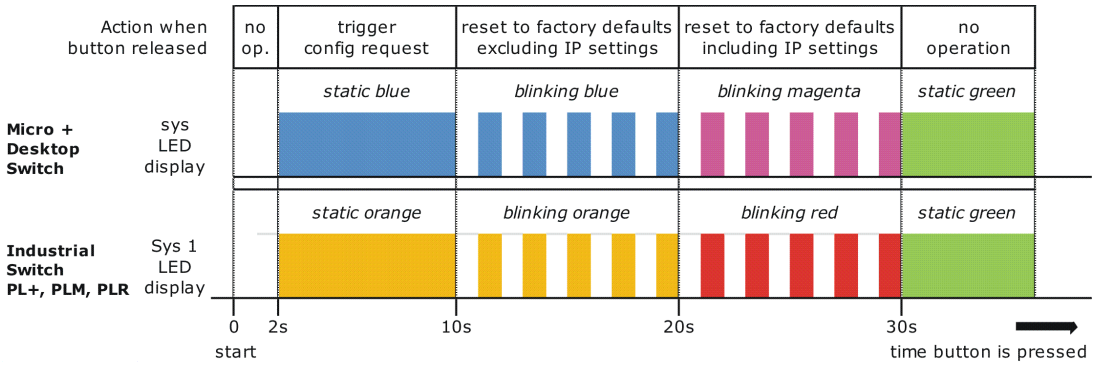

©2026 MICROSENS GmbH & Co. KG - Hamm/Germany - www.microsens.com

Duration pressed	Action performed
less than 2 sec.	No operation is performed. This minimum delay prevents accidential triggering of an action by pressing the 'System' button. The 'sys' LED remains switched off
2-10 sec.	Switch sends configuration request packet to NMP software, requesting for initialisation of IP interface. This function is only available when NMP software is running on a PC connected to the same network segment as the switch. When receiving the config request packet, a message box opens up showing the current IP settings. This function is very useful to set the initial IP stack values if the switch is unconfigured. This mode is indicated by the 'sys' LED static blue (Industrial Switch: static orange).
10-20 sec.	Switch resets the running configuration to the factory default configuration. All parameters are overwritten except the IP address settings. This mode is indicated by the 'sys' LED blinking blue (Industrial Switch: blinking orange).
20-30 sec.	Switch resets the running configuration to the factory default configuration. All parameters are overwritten including the IP address settings. This mode is indicated by the 'sys' LED blinking magenta (Industrial Switch: blinking red).
more than 30 sec.	Switch goes back to normal operation without performing any special action. This mode is indicated by the 'sys' LED static green.

1.8 Permitted / not permitted Characters

1.8.1 Generally not permitted characters

ASCII codes <32 and >126 (unless ISO 8859 is permitted)

Characters: < > ' & " „ “ Â Ã (TAB)

1.8.2 Permitted characters for usage in passwords

Digits: 0-9

Letters: a-z, A-Z

Characters: # $ * ? ( ) ! . @ % = { } ~ + - , ^ _(underscore) (space)in the middle

> ***INFO:*** *In passwords leading and subsequent blanks will be cut off and multiple blanks will be merged to one single blank.*

©2026 MICROSENS GmbH & Co. KG - Hamm/Germany - www.microsens.com

1.8.3 Permitted characters for usage in CLI, web manager, scripting, text, strings, etc.

Digits: 0-9

Letters: a-z, A-Z

Characters: # $ * ? ( ) [ ] / \ ' @ % = { | } ~ + - ! . : ; , ^ _(underscore) (space)

1.8.4 Support of ISO/IEC 8859-1 (Since V10.4.1):

Since Firmware version 10.4.1 German Umlaute, French Accents, etc. are supported in all user interfaces for selected descriptive parameters.

Support of ISO 8859-1 coding as follows:

ISO/IEC 8859-1

Code	...0	...1	...2	...3	...4	...5	...6	...7	...8	...9	...A	...B	...C	...D	...E	...F
0...	not used															
1...																
2...	SP	!	"	#	$	%	&	'	(	)	*	+	,	-	.	/
3...	0	1	2	3	4	5	6	7	8	9	:	;	<	=	>	?
4...	@	A	B	C	D	E	F	G	H	I	J	K	L	M	N	O
5...	P	Q	R	S	T	U	V	W	X	Y	Z	[	\	]	^	_
6...	`	a	b	C	d	e	f	g	h	i	j	k	l	m	n	o
7...	p	q	r	S	t	u	v	w	x	y	z	{	|	}	~	
8...	not used															
9...																
A...	NBSP	¡	¢	£	¤	¥	¦	§	¨	©	ª	«	¬	SHY	®	¯
B...	°	±	²	³	´	µ	¶	·	¸	¹	º	»	¼	½	¾	¿
C...	À	Á	Â	Ã	Ä	Å	Æ	Ç	È	É	Ê	Ë	Ì	Í	Î	Ï
D...	Ð	Ñ	Ò	Ó	Ô	Õ	Ö	×	Ø	Ù	Ú	Û	Ü	Ý	Þ	ß
E...	à	á	â	ã	ä	å	æ	ç	è	é	ê	ë	ì	í	î	ï
F...	ð	ñ	ò	ó	ô	õ	ö	÷	ø	ù	ú	û	ü	ý	þ	ÿ

Generally not permitted character

INFO: *In CLI search for Keyword "$ISO8859" to find out, which character range is permitted for an individual parameter.*

©2026 MICROSENS GmbH & Co. KG - Hamm/Germany - www.microsens.com

2 Command Line Interface (CLI)

2.1 Key Features

Base Features

Intuitive command line interface to manage every aspect of the device. Supports wildcards and named ports as variables. Quick command entry due to auto-completion and command recall buffer. Individual console prompt string, Console inactivity timeout automatically logs out unattended terminal. Supports color displays. Online help for each parameter by typing a ?.

The command line interface (CLI) is the most direct way to manage the device. Guided operation leads the operator with just a brief learning phase. The CLI it is very convenient and quick to use. The CLI is invoked when a Telnet or SSH session in opened.

Context Sensitive Help

Type ? anywhere while editing and context sensitive help regarding the current parameter is provided.

Helps unexperienced user. No need for a handbook. All options individually explained similar to the handbook.

Offline Configuration

Offline configuration permits editing of an unlimited number of user configuration sets. These configurations may be copied, viewed, up and downloaded by file transfer protocols. Offline configurations can be made online at any time.

Offline configurations or alternate configuration permit complex setups without affecting the device operation. On completion the entire configuration changes are activated in one go. Of course direct editing with immediate effect is available too.

Comprehensive Editing

All parameter are shown and edited with the same syntax. No handbook needed for operation. Command options can be scrolled. For numbers values ranges are shown. Parameter can be written for ranges or wildcards.

Even complex settings are quickly accomplished. No need to memorize a complex syntax.

Scripting

Supports full scripting and editing of script files. A script may execute any CLI command provided the access rights are valid. Scripts may locally be edited or downloaded. A script may also be downloaded by DHCP/BOOTP function when a unit is newly connected to the network. Such script may reconfigure the device, load other scripts or even download and install a software update.

Scripts are a powerful tool to automate operation with a large number of devices that require a similar customer setup.

microScript Language

Powerful and comprehensive script language permits customized active functions which greatly increase flexibility of the product.

Special functions that in past would have required a specially made firmware can now be implemented by the customer himself or by the technical support team.

©2026 MICROSENS GmbH & Co. KG - Hamm/Germany - www.microsens.com

Timer Controlled Scripting

Scripts support timed single shot or cyclical invocation. Useful to implement time outs for error handling,

Simplifies exception script handling. May also be used for timed execution.

Show All Config

With the ShowAllConfig command the entire configuration can be displayed to console and simultaneously to a script file. The script can be used as backup or to configure other units. The command may also be used to display only the differences to any stored or default configuration.

The script output can be used for automation purposes for example in combination with DHCP option 66/67. The script can also form the basis for manually written scripts.

Show All Status

With the ShowAllStatus command the entire status of any parameter is displayed to console and simultaneously to a script file.

The script can be saved as backup for later reference or may be used as input to an automated test script.

Create Snapshot

Creates a snapshot of all relevant system information inluding all config, status, internal process details.

The snapshot file can be uploaded to support team for comprehensive analysis. This is especially helpful in a secured network, where remote access is not permitted.

Live Syslog

Syslog events can be forwarded to the active console the moment they occur. Filtering according to logging setup applies.

Unexpected events are shown on the console. Usually terminals of other products do not show events.

Telnet

A telnet session automatically invokes the cli. Telnet may be disabled in total or per user to enforce use of the more secure SSH method.

Popular terminal interface for device management. It is safeguarded by the login/password process but offers no further security.

Secure Shell (SSH)

An SSH session automatically invokes the cli. SSH may be disabled by configuration.

Terminal interface for device management. It is saveguarded by the login/password process plus the data transfer is encrypted. The use of this interface is encouraged.

SSH CLI-Commands

It is possible to supply any CLI command directly in the SSH connect. The CLI command is executed and the connection is dropped immediately.

Provides an alternate way of secure remote configuration.

©2026 MICROSENS GmbH & Co. KG - Hamm/Germany - www.microsens.com

Welcome Message

A customer programmable welcome message can be defined. This is shown prior to login prompt. May also be used to indicate warning to deter malicious user. Multiline output supported.

Helps to identify the proper device prior to login. May also be used to indicate warning to deter malicious user.

Umlaut Support

Support for German Umlaute, French Accents, etc. in all user interfaces for selected parameters. Supports ISO 8859-1 coding.

User defined names and information field can be written in correct spelling even if non-ASCII characters are required.

Favorites

Most often used commands can be entered as favorites and then be executed with a single key stroke (F).

Further simplifies use for frequent CLI operators.

2.2 Functional Description

2.2.1 Introduction

The command line interface (CLI) may be used to control and monitor the device. The CLI permits full access to every aspect of the device. Access to the CLI is established via the local serial port or by Telnet or SSH access via one of the Ethernet ports. The device uses a state-of-the-art data driven and XML based configuration scheme. The CLI automatically learns the available XML templates and as such can never be out of date, even should extensive firmware upgrades occur.

2.2.2 Access Control

The CLI uses a user/password scheme for access control. The same names scheme applies as used for SNMPv3. Access may be restricted to Telnet or SSH individually and for each user independently. Furthermore a view based restriction applies. A user may be allowed to see and/or modify only certain aspects of the product. All of these functions are governed by the '*management.access*' section of the configuration tree structure.

Default User Accounts

The following user accounts are predefined:

Username	Password	Access Permissions
admin	administrator	Read / Write
user	microsens	Read / Write (limited)
public	microsens	Read Only

Logout

Use '*Logout*' command to exit the CLI and close the session. There is an inactivity timer that automatically logs-off the CLI after 5 minutes (Default value).

©2026 MICROSENS GmbH & Co. KG - Hamm/Germany - www.microsens.com

2.2.3 Basic Operation

The CLI is started automatically upon successful login.

```
Command Line Interface (CLI) / MICROSENS GmbH / Co. KG
You are logged in as admin (id:1) from IP -
Your general access rights are: Read/Write

Type ? for help on operation and for parameter details.
>>
```

The welcome lines indicates your login name and the associated general access rights. Type '?' for a brief summary of the CLI basic operation.

The CLI is designed for convenient operation without the need to remember the various keywords. The cursor keys can be used to navigate through the options. Alternatively, typing the first letters of the keywords, the input is auto-expanded to the full word when it is clearly detected. The two modes of operation may be mixed freely as desired.

2.2.4 Cursor Operation

[*CursorRight*] shows the first keyword of the next branch in the tree.
[*CursorLeft*] steps back to the previous tree level. This deletes the entire keyword at once.
[*CursorUp/Down*] shows the keywords available at the current tree layer.

A '.' (dot) behind the keyword indicates that there is a further layer available that may be selected by [*CursorRight*]. At any time it is possible to type [*Return*]. For incomplete commands a help is displayed which lists the available keywords. Whenever possible, the CLI will display the information of all elements in that layer.

> ***INFO:*** *[CursorUp] redisplays the last command line for further editing.*

Any further [*CursorUp*] will change the last keyword. There is a recall buffer that keeps the last 10 commands. The recall buffer is accessed using the [*PageUp*] and [*PageDown*] keys.

> ***INFO:*** *Not every terminal supports these keys. (VT102/VT220 emulation)*

Some operators prefer to type the commands in full. This mode is facilitated by setting

```
Management.CLI.auto_text_expansion = Disabled
```

Even in this mode, it is always possible to type [*CursorRight*] to auto-complete a keyword. A few examples:

User typed [*Return*] right after 'Device.' first level in the tree:

```
>>Device.
INCOMPLETE COMMAND: Type . or cursor right for next keyword level.
Add any of the following keywords:
    Factory
    System
    Hardware
```

```
    IP
    Port
    SFP
    POE
    MAC
    RMON
>>
```

When on the last level before the end of the tree, typing [*Return*] displays the underlying data at once. Like in this example:

```
>>Management.CLI.
enable_telnet           :  Enabled
enable_ssh              :  Enabled
prompt_source           :  HOSTNAME
user_prompt             :  MICROSENS
colors                  :  Enabled
script_mode             :  Disabled
auto_text_expansion     :  Enabled
dont_ask_questions      :  Disabled
inactivity_timeout      :  300
num_of_clis             :  1
last_command            :  Management.CLI.
Note additional tables  : .recall_buffer
>>
```

INFO: *Often data is grouped in tables. When data is available for display in the current tree layer, and others require more depth to execute, then the data at the current layer is shown and an indication to the other data in a further layer is made in this way: 'Note additional table: xxxx'*

2.2.5 Setting Values

When a command is fully typed in, no trailing dot is displayed. Type [*Return*] to display or type '=' to set a new value.

Depending on the type of parameter, either a string or value can be entered or a list of options may be scrolled through using [*Cursor Up/Down*] keys.

2.2.6 Getting Help

At any level it is possible to retrieve help information for the currently selected layer or parameter by simply typing '?' (question mark). New lines with information are shown, then the edited line is redisplayed for further editing.

```
>>Device.IP.local_mtu ?
MTU value for locally generated data.
Default Value: 1500
```

©2026 MICROSENS GmbH & Co. KG - Hamm/Germany - www.microsens.com

```
Range: 128-9000
>>Device.IP.local_mtu
```

This help is available even for every individual parameter item, when such items are displayed.

Example:

```
>>Management.CLI.prompt_source = USER_DEFINED ?
A user defined string as defined in 'user_prompt' is used as prompt
Default Value: 3
>>Management.CLI.prompt_source = USER_DEFINED
```

2.2.7 Script Mode

While the default editing is intended for human input, the CLI is fully scriptable and may be operated through command files and from scripting engines. For this purpose the CLI settings should be changed.

For script mode enter the following commands:

```
Management.CLI.auto_text_expansion = Disabled
Management.CLI.script_mode = Enabled
```

The CLI comes with an editor that permits to write CLI scripts. A CLI script may contain any command that could be written.

Note that the line editor discards wrong characters. For example the word *devixce* would be treated like *device*. The extra *x* is ignored. Likewise *devic.hardware* would fail due to the missing *e* in *device*.

> ***INFO:*** *When 'script_mode' is enabled, the command output is changed to reflect the required input line to set that value.*

Example with script mode disabled:

```
>>Management.CLI.colors = Disabled
colors: Disabled
>>
```

The same example with script mode enabled:

```
>>Management.CLI.colors = Disabled
Management.CLI.colors = Disabled
>>
```

The output of the command can be used to set the value again. Therefore it is convenient to display what should go into the script file. Copy that output into the terminal clipboard and then paste the contents in the script editor. Then modify to taste.

©2026 MICROSENS GmbH & Co. KG - Hamm/Germany - www.microsens.com

Lists all available script files

To display all available script files stored on the device use the following command:

```
Management.Files.scripts.list_files
```

Execute a script file

To execute a script files use the following command:

```
RunScriptFile = filename
```

INFO: *It is not required to switch the CLI configuration to 'script_mode' before executing a script. The 'RunScriptFile' command does this automatically and returns to the previously selected mode afterwards.*

Comments in Script Files

Script files can contain comments for documentation and simplified understanding. A comment line must start with the character '#', all following characters are ignored until the end of the line.

```
# This is a comment line
# All text is ignored until line end
...
```

Built-in script editor

To edit a script simply use the following command. If the name does not already exist, a new file is created:

```
EditScriptFile = filename
```

This action starts the integrated MCEdit text editor. As this editor runs in full-screen mode, there may be compatibility issues with the terminal emulation used by the CLI session. For best results we recommend using 'PuTTY', which is a powerful, free Telnet and SSH client.

©2026 MICROSENS GmbH & Co. KG - Hamm/Germany - www.microsens.com

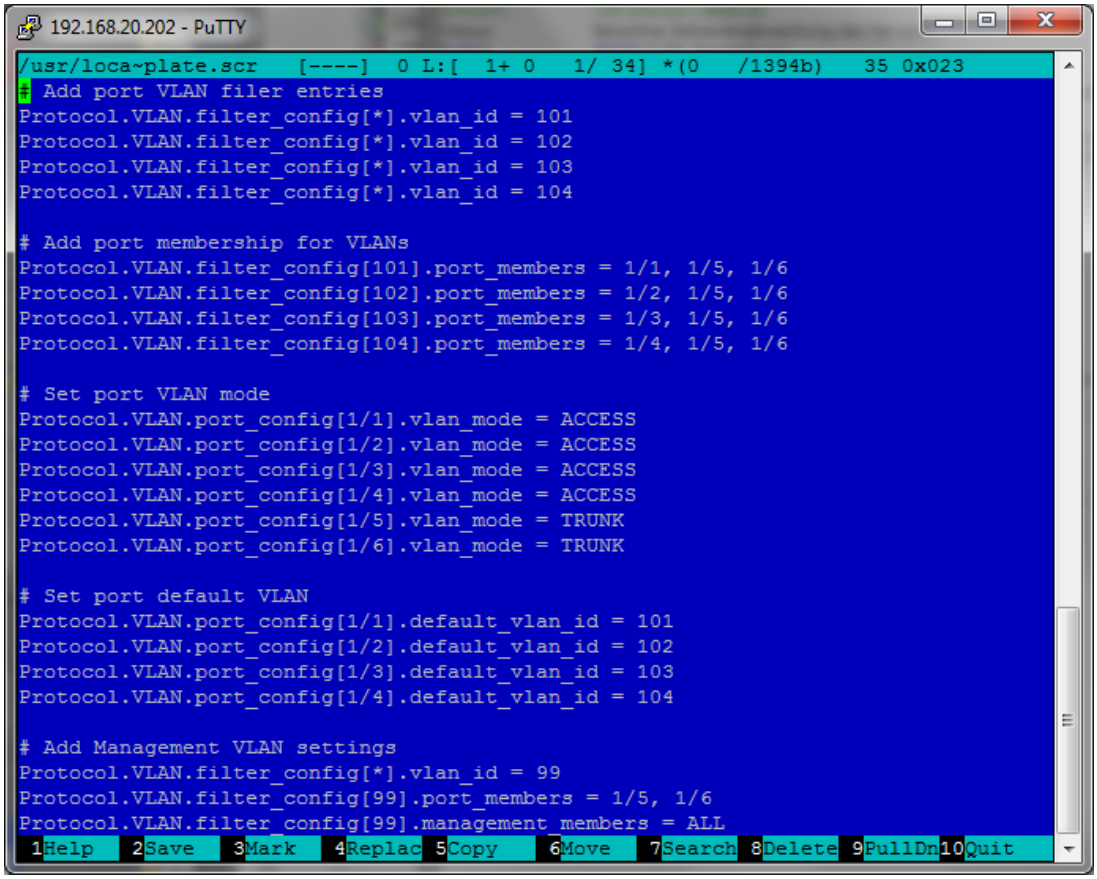

The editor supports function keys and pull-down menus. Please see the documentation section at 'www.midnight-commander.org' for a detailed description of all functions.

Pressing 'F10' function key closes the editor and returns to normal CLI mode.

Up-/Download of script files

```
Management.Files.scripts.download_from_server =
    ftp://name:passwd@machine.domain:port/full/path/to/scriptfile

Management.Files.scripts.upload_to_server = scriptfile -u
    user:passwd ftp://ftp.upload.com/
```

These last two commands permit transfer of script files from/to external servers. There is a variety of protocols available for transfer. This includes HTTP, HTTPS, FTP, SFTP and TFTP.

For a more detailed description please refer to the detailed description of these parameter in the section 'File Operations' of this document.

©2026 MICROSENS GmbH & Co. KG - Hamm/Germany - www.microsens.com

INFO: *Script files use UNIX-style line termination (LF). When editing and downloading scripts from a Windows environment, please use an editor program or tool to convert Windows-style (CR+LF) line termination to UNIX compatible.*

Script execution via DHCP

A script file may also be transferred triggered by DHCP. The DHCP options 66/67 for Bootp may be used to inform the device of a certain host and filename. Upon initiating the DHCP function, this name is retrieved. Subsequently the file itself is automatically loaded. Upon success, the file is treated as an CLI script and an instance of the CLI will be run in background.

This script may for example contain commands to perform a configuration or even firmware download. Thus this is a very powerful tool used for rollout and maintenance.

2.2.8 List Handling with Indexes

So far only parameter have been shown that do not require an index. However, many parameters apply to a particular port or VLAN. The CLI simplifies operation here too.

An index is marked by square brackets such as in this example.

```
Protocol.VLAN.filter_config[1].alias = Any Name
```

When *auto_text_expansion* is enabled, the opening bracket is automatically displayed. This is also a hint that a value is expected. Now either type the desired index or hit [*CursorRight*], then [*CursorUp/Down*] to scroll through the available range.

Once the index is selected either way type ')' or ']' or [*Cursor Right*]. The index is completed and the next '.' (dot) is displayed. Now [*CursorUp/Down*] may be used to scroll through the following parameter.

A port range works similar to a normal index range with the exception, that a port is defined by its slot location and a port on this slot. For the installation switch or a desktop switch there is only one slot (1).

The slot becomes important when the Industrial Switch with extendable port modules is used. Here several slots with data ports exists. A typical port index looks like this: (Slot 1, Port 2)

```
Device.Port.config[1/2].speed = 1000_MBIT
```

It is possible to assign alias names to a port for convenience. When the cursor keys are used to navigate the indicies, then the alias names are displayed where available.

```
# Define Alias
Device.Port.config[1/3].alias = My Name

# Alias displayed when using auto-complete function
>>Device.Port.config[1/3 ('My Name')].speed
[1/3].speed: 1000_MBIT
>>
```

The port alias name may also be used to address a port. Use double quotes to delimit the name. Blanks may appear and up to 32 characters for alias names are permitted.

©2026 MICROSENS GmbH & Co. KG - Hamm/Germany - www.microsens.com

```
>>Device.Port.config['My Name'].
alias : My Name
enable_port : Enabled
speed : 1000_MBIT
enable_full_duplex : Enabled
enable_auto_negotiation : Enabled
enable_flowcontrol : Enabled
enable_fefi : Disabled
enable_mdi : AUTO
>>
```

***ATTENTION:* All alias addressing is disabled in 'script_mode'. It is not possible to use alias addressing in scripts. Wildcards are available to view several ports at once.**

Allowed options are:

- [1/*] - Display all ports on slot 1.
- [*/*] - Display all ports on all slots.

Depending on the section to display, the screen width may not be sufficient to display all elements. In such a case limit the display to only one parameter like *[*/*].speed*. If the list is too long, a break is displayed.

***INFO:** When script_mode is enabled, the screen does not stop after a full screen and content may roll off the screen. This is done so that capturing programs and scripts are easier to implement.*

Adding/Removing new list entry

A new entry to a list parameter is generated by using the '*'-character (star) as index value. The following example adds a new filter entry for VLAN '101' into the VLAN filter table:

```
Protocol.VLAN.filter_config[*].vlan_id = 101
```

The field 'vlan_id' is the reference field for the index.

By leaving the reference field empty, the entry can be removed. The following example removes the VLAN filter entry for VLAN '101':

```
Protocol.VLAN.filter_config[101].vlan_id =
```

A security question is asked before the action is executed.

2.2.9 Offline Configuration

The device uses an XML file based configuration scheme. A device configuration consists of a collection of files grouped in a folder (directory).

©2026 MICROSENS GmbH & Co. KG - Hamm/Germany - www.microsens.com

The CLI, and other user interfaces, allow to copy, modify and transfer such configurations without affecting the running device.

Principle of Operation

Normal operation of the CLI affects the currently running and active configuration. Changes are immediately in effect.

Use *backup_to_folder* to create a user copy of the running configuration. This backed up configuration can be modified using the *OfflineConfiguration* command. This mode of operation is identified by a special prompt. Use the *OnlineConfiguration* command to return to normal live mode of operation.

Example:

```
MICROSENS>>Management.Files.configuration.backup_to_folder = MyConfig
NOTE: This will execute an action command with the following
function:
Copies running configurationto a new or existing folder. If the
folder name already exists the previous configuration is
overwritten. Syntax: backup_to_folder = my_new_config
Type y to continue, else to quit: y
executing..
Backup running configuration files to MyConfig.
ok
MICROSENS>>
MICROSENS>>OfflineConfiguration = MyConfig
You are now working on folder: MyConfig
Folder: MyConfig>>
...
Folder: MyConfig>>OnlineConfiguration
You are now working on the live configuration again.
MICROSENS>>
```

The *list*, *copy* and *delete* commands may be used as required. To activate a user configuration it must be made the running configuration. This is achieved using the *restore_from_folder* command.

The configuration is not simply replaced. Instead each individual parameter is evaluated to be valid (especially required when downloaded configurations are used). If the parameter value is changed compared to the currently running, the changes are executed and logged like every parameter change. This ensures that every change is noticed and can be traced back to the operator and time.

Please see the section 'File Operations' of this document for a more detailed description of all commands.

2.2.10 Advanced Features

Timeout

The CLI automatically logs off when unattended for a certain time. The default time out value is 5 minutes. This time can be changed and the time out may be turned off altogether. This is especially useful in lab situations.

```
Management.CLI.console_timeout = 0
```

©2026 MICROSENS GmbH & Co. KG - Hamm/Germany - www.microsens.com

The CLI uses the access right and views as defined in the *management.access* section of the parameter tree.

Logname

Any change here is immediately reflected and takes effect. To verify the currently active settings use the following command:

```
>>WhoAmI
Your are logged in as admin with general access rights: Read / Write
>>
```

Expert Mode

Before any action command that executes a function, the CLI displays a warning text and requires 'y' before execution. For experienced user this check may be disabled.

```
Management.CLI.dont_ask_questions = Enabled
```

Colors

The CLI uses colors for better readability. Help information are shown green, the prompt in yellow. Parameter values are magenta and action details may appear cyan. Errors are shown in red.

When colors are not desired or when a terminal does not support colors and strange characters appear, then colors may be turned off.

```
Management.CLI.colors = Disabled
```

Screen Size

The CLI adapts to the size of the terminal. When several columns are shown due to *[*]* wildcards, the individual fields are resized and trimmed automatically for best fit. The wider the terminal, the more data fit. When resizing the screen on the fly, simply press return on an empty line and the CLI will relearn the size.

Similarly, the line break for long lists adapts to the screen height.

©2026 MICROSENS GmbH & Co. KG - Hamm/Germany - www.microsens.com

2.3 CLI CLI Command Reference

The following table lists all CLI commands applicable for this feature section. For each parameter, the access mode is given:

R = Read Only, R/W = Read/Write, X = Executable Action.

Please note that the effective access rights are dependent on the login level of the user.

Category	Group	Table	Parameter	Options	Access	Description
Management.						
	cli.					Command Line Interface (CLI) accessible via local terminal port, Telnet or SSH.
			enable_telnet		R/W	Enable TELNET for CLI access. Note: Disable TELNET and enable only SSH when only secure access is desired.
			enable_ssh		R/W	Enable SSH for CLI access. Note: When disabled also the SFTP file transfer server is disabled.
			prompt_source		R/W	Decides which prompt is shown.
			welcome_message		R/W	This welcome message is displayed prior to the login prompt. Use \n to enter a new line for multiline messages.
			user_prompt		R/W	User definable prompt string.
			colors		R/W	Color enhances readability but may not work with every terminal. Disable function when funny character appear.
			script_mode		R/W	When set the output will include the full command which permits to pipe the output into a script file.
			auto_text_expansion		R/W	When enabled typing characters will automatically be expanded on the command line for quicker access. This may conflict with batch file processing.
			dont_ask_questions		R/W	When enabled security questions are avoided for experienced operators.
			inactivity_timeout		R/W	An unattended CLI terminal logs off automatically after specified seconds. Use 0 to disable timeout.
			named_status_selection		R/W	When enabled dynamic status tables can comfortably be referenced by name. Otherwise a numerical index is used.
			live_help		R/W	When enabled a help text is automatically displayed while browsing through the CLI commands.

©2026 MICROSENS GmbH & Co. KG - Hamm/Germany - www.microsens.com

	script_tracing	R/W	This feature may be used to debug scripts and should otherwise be disabled. When enabled the program flow of a microScript or app is traced. To limit the trace to certain file(s) specify the file names in the script_filter parameter.
	script_debugging	R/W	This feature may be used to debug scripts and should otherwise be disabled. When enabled possible debug messages are displayed. To limit the output to sections of interest, the debug output is filtered according to the file names specified under script_filter.
	script_filter	R/W	When left blank, and debugging is enabled, all debug output is displayed. Enter a comma separated list of script file names to limit the debug output to these files.
favorites[16].			This table may be for a customized the favorites display. The commands are displayed in the entered order using the Favorites command.
	command_line	R/W	Enter full command as it would be typed on the CLI console. This may also include calling scripts using RunScriptFile = file syntax.
	last_instance	R	Number of times a CLI was started. Note: this value wraps at 255.
script_status.			Statistics about script file execution. Note that multiple CLI instances or command line invokations add up in the same statistics.
	last_script_name	R	Name of last CLI script executed.
	executed_files	R	Counts each time a CLI script is executed.
	executed_commands	R	Counts each command executed within the current/ last script file. The value is reset each time a script starts executing.
	command_errors	R	Counts each executed command within the current/ last script file that returned an error code. The value is reset each time a script starts executing.
compare_status.			Displays status results of the % operator to compare parameter or status to a set value.
	last_dotstring	R	Copy of last dot_string tested.
	matched	R	Displays True when the last comparision matched.

©2026 MICROSENS GmbH & Co. KG - Hamm/Germany - www.microsens.com

	items_compared	R	Counts the number of items tested. May be more than 1 when wildcards are used.
	items_different	R	Counts the number of items the were different. May be more than 0 when wildcards are used.
script_monitor[16].			Displays status results of the % operator to compare parameter or status to a set value.
	state	R	Indicates if this record displays a currently running script or a history entry of a previously running script which has ended by now.
	script_name	R	Name of the script
	launched_by	R	Name of event or or other means of starting
	cli_instance	R	Index identifying the executing cli instance
	launch_time_stamp	R	Indicates the time when this record was created and the time this script was started.
	run_time	R	Indicates how long the script has been executing. For history entries indicates the last run time taken.
	current_file	R	Indicates the currently executed script file.
	current_subroutine	R	Indicates the currently executed subroutine.
	lines_executed	R	Counts how many script lines were executed.
	current_line_number	R	This gives a snapshot of the currently executed line of code.
	script_errors	R	In real time counts errors during script execution.
instances[256].			This table indicates how many CLI are currently running and for which operator and reason.
	user_name	R	User that is logged in.
	command_line	R	Displays optional command line parameter or script names that are executed by this CLI instance.
	process_id	R	Indicates the process id for debugging purposes. 0 is no process.
	launch_time_stamp	R	Indicates the time when this cli was started.

©2026 MICROSENS GmbH & Co. KG - Hamm/Germany - www.microsens.com

2.4 CLI Configuration Parameters

Group **Path**	**General Parameters** Management.CLI
enable_telnet	Enable TELNET for CLI access. Note: Disable TELNET and enable only SSH when only secure access is desired. **Values** enabled, disabled **OID** 1.3.6.1.4.1.3181.10.6.3.62.1 (cliEnableTelnet)
enable_ssh	Enable SSH for CLI access. Note: When disabled also the SFTP file transfer server is disabled. **Values** enabled, disabled **OID** 1.3.6.1.4.1.3181.10.6.3.62.2 (cliEnableSsh)
prompt_source	Decides which prompt is shown. **Values** *HOSTNAME* The device hostname is used as prompt *DEVICE_LOCATION* The user specified device location is used as prompt *USER_NAME* The login name of the user is used as prompt *USER_DEFINED* A user defined string as defined in 'user_prompt' is used as prompt **OID** 1.3.6.1.4.1.3181.10.6.3.62.3 (cliPromptSource)
welcome_message	This welcome message is displayed prior to the login prompt. Use \n to enter a new line for multiline messages. **Value** String, max. 512 characters. **OID** 1.3.6.1.4.1.3181.10.6.3.62.4 (cliWelcomeMessage)
user_prompt	User definable prompt string. **Value** String, max. 32 characters. **OID** 1.3.6.1.4.1.3181.10.6.3.62.5 (cliUserPrompt)
colors	Color enhances readability but may not work with every terminal. Disable function when funny character appear. **Values** enabled, disabled **OID** 1.3.6.1.4.1.3181.10.6.3.62.6 (cliColors)

©2026 MICROSENS GmbH & Co. KG - Hamm/Germany - www.microsens.com

script_mode	When set the output will include the full command which permits to pipe the output into a script file. **Values** enabled, disabled **OID** 1.3.6.1.4.1.3181.10.6.3.62.7 (cliScriptMode)
auto_text_expansion	When enabled typing characters will automatically be expanded on the command line for quicker access. This may conflict with batch file processing. **Values** enabled, disabled **OID** 1.3.6.1.4.1.3181.10.6.3.62.8 (cliAutoTextExpansion)
dont_ask_questions	When enabled security questions are avoided for experienced operators. **Values** enabled, disabled **OID** 1.3.6.1.4.1.3181.10.6.3.62.9 (cliDontAskQuestions)
inactivity_timeout	An unattended CLI terminal logs off automatically after specified seconds. Use 0 to disable timeout. **Value** Number in range 0-10000 **OID** 1.3.6.1.4.1.3181.10.6.3.62.10 (cliInactivityTimeout)
named_status_selection	When enabled dynamic status tables can comfortably be referenced by name. Otherwise a numerical index is used. **Values** enabled, disabled **OID** 1.3.6.1.4.1.3181.10.6.3.62.11 (cliNamedStatusSelection)
live_help	When enabled a help text is automatically displayed while browsing through the CLI commands. **Values** enabled, disabled **OID** 1.3.6.1.4.1.3181.10.6.3.62.12 (cliLiveHelp)
script_tracing	This feature may be used to debug scripts and should otherwise be disabled. When enabled the program flow of a microScript or app is traced. To limit the trace to certain file(s) specify the file names in the script_filter parameter. **Values** enabled, disabled **OID** 1.3.6.1.4.1.3181.10.6.3.62.13 (cliScriptTracing)
script_debugging	This feature may be used to debug scripts and should otherwise be disabled. When enabled possible debug messages are displayed. To limit the output to sections of interest, the debug output is filtered according to the file names specified under script_filter. **Values** enabled, disabled **OID** 1.3.6.1.4.1.3181.10.6.3.62.14 (cliScriptDebugging)

©2026 MICROSENS GmbH & Co. KG - Hamm/Germany - www.microsens.com

script_filter	When left blank, and debugging is enabled, all debug output is displayed. Enter a comma separated list of script file names to limit the debug output to these files. **Value** String, max. 128 characters. **OID** 1.3.6.1.4.1.3181.10.6.3.62.15 (cliScriptFilter)

©2026 MICROSENS GmbH & Co. KG - Hamm/Germany - www.microsens.com

2.5 CLI Status Parameters

Group	**General Parameters**
Path	Management.CLI

last_instance	Number of times a CLI was started. Note: this value wraps at 255.	
	Value	Number in range 0-255
	OID	1.3.6.1.4.1.3181.10.6.3.62.100 (cliLastInstance)

Group	**script_status**
Path	Management.CLI.script_status
Description	Statistics about script file execution. Note that multiple CLI instances or command line invokations add up in the same statistics.

last_script_name	Name of last CLI script executed.	
	Value	String, max. 256 characters.
	OID	1.3.6.1.4.1.3181.10.6.3.62.101.1.2 (scriptStatusLastScriptName)
executed_files	Counts each time a CLI script is executed.	
	Value	Number in range 0-0xFFFFFFFF
	OID	1.3.6.1.4.1.3181.10.6.3.62.101.1.3 (scriptStatusExecutedFiles)
executed_commands	Counts each command executed within the current/last script file. The value is reset each time a script starts executing.	
	Value	Number in range 0-0xFFFFFFFF
	OID	1.3.6.1.4.1.3181.10.6.3.62.101.1.4 (scriptStatusExecutedCommands)

©2026 MICROSENS GmbH & Co. KG - Hamm/Germany - www.microsens.com

command_errors	Counts each executed command within the current/last script file that returned an error code. The value is reset each time a script starts executing. **Value** Number in range 0-0xFFFFFFFF **OID** 1.3.6.1.4.1.3181.10.6.3.62.101.1.5 (scriptStatusCommandErrors)

Group	**compare_status**
Path	Management.CLI.compare_status
Description	Displays status results of the % operator to compare parameter or status to a set value.
last_dotstring	Copy of last dot_string tested. **Value** String, max. 256 characters. **OID** 1.3.6.1.4.1.3181.10.6.3.62.102.1.2 (compareStatusLastDotstring)
matched	Displays True when the last comparision matched. **Values** true, false **OID** 1.3.6.1.4.1.3181.10.6.3.62.102.1.3 (compareStatusMatched)
items_compared	Counts the number of items tested. May be more than 1 when wildcards are used. **Value** Number in range 0-0xFFFFFFFF **OID** 1.3.6.1.4.1.3181.10.6.3.62.102.1.4 (compareStatusItemsCompared)
items_different	Counts the number of items the were different. May be more than 0 when wildcards are used. **Value** Number in range 0-0xFFFFFFFF **OID** 1.3.6.1.4.1.3181.10.6.3.62.102.1.5 (compareStatusItemsDifferent)

©2026 MICROSENS GmbH & Co. KG - Hamm/Germany - www.microsens.com

3 System Access

3.1 Key Features

Unlimited number of Users

Three default users are created and any number of additional users may be created.

Default settings permit simple security setup. However, when desired advanced and precise access control down to parameter level can be achieved.

View Based Access Model

Access right can be precisely tailored for each user. Similar to SNMP V3 view model but applied to all user interfaces including CLI.

Default settings permit simple security setup. However, when desired advanced and precise access control down to parameter level can be achieved.

General access rights

For quick and effective rights management the general read/write privileges of a user can be selected.

Disable Insecure Interfaces

It is possible to restrict management access to secure interfaces such as HTTPS, SSH, SNMP V3

Enforce secure access policies

Interface Restrictions

For each user the permitted user interfaces can be selected.

Fine granulation of access rights

Public key encrypted passwords

For each user an access password plus an SNMP V3 password is assigned. Proper AES256 public key encrpyted passwords are stored.

Secure and robust access control.

View Model for SNMP V1,V2c

The access view model may be applied to SNMP V1 or V2c access, practically creating SNMP V3 like access protection.

SNMP V3 like access protection without the complication associated with SNMP V3.

Firewall with Black and White List

Setup a dynamic list of IP addresses that may or may not gain access to the management interface. Blacklist is combined with firewall function.

Layer 3 security

©2026 MICROSENS GmbH & Co. KG - Hamm/Germany - www.microsens.com

TACACS+ Authentication

Users can be authenticated using central TACACS+ server. The supplied privilege levels can be mapped to any local security level.

Centralized access control. Especially useful in Cisco environment.

RADIUS access verification

Users that wish to gain system access may be authenticated via a RADIUS server instead of the locally stored names. Fallback to local is possible.

Centralized access control.

3.2 Functional Description

3.2.1 User Access

Users with individual access rights to the system information can be defined. Access rights can be fine tuned by defining user groups and views.

Adding, editing and removing of users, groups and views can be done as described in 'Command Line Interface (CLI)' section of this document.

3.2.2 Interface Selection

Each management interface can be enabled or disabled depending on the security policies required. By disabling an interface, access via the corresponding protocol is completely blocked.

©2026 MICROSENS GmbH & Co. KG - Hamm/Germany - www.microsens.com

3.3 Access CLI Command Reference

The following table lists all CLI commands applicable for this feature section. For each parameter, the access mode is given:

R = Read Only, R/W = Read/Write, X = Executable Action.

Please note that the effective access rights are dependent on the login level of the user.

Category	Group	Table	Parameter	Options	Access	Description
Management.						
	access.					Local access control for user login authentication and element access limitation
			authentication_mode		R/W	This parameter defines against which database incoming user and password are verified.
		user[DYNAMIC].				
			name		R/W	Unique name used to login to the system regardless of the management interface used. At least 3 character are required.
			associated_groups		R/W	A user must be part of a group and inherits the rights of the groups and their views.
			general_access_rights		R/W	Limited access rights here overrule rights granted by the associated groups and their views. Use NO_ACCESS to temporarily suspend a user account.
			enable_telnet_access		R/W	Permit CLI user access via insecure telnet session or via local serial port.
			enable_ssh_access		R/W	Permit CLI user access via secure shell.
			enable_web_access		R/W	Permit user access via the web interface.
			enable_snmp_access		R/W	Permit user access via SNMP of any version. Additionally use SNMP settings to restrict to only secure SNMP v3 if desired.
			enable_nmp_access		R/W	Permit user access via the nmp network management application.
			enable_ftp_access		R/W	Permit ftp access for file transfers.

©2026 MICROSENS GmbH & Co. KG - Hamm/Germany - www.microsens.com

	enter_password	X	Set a new authentication password which replaces the previous one. This password applies to all user access methods except SNMP. For SNMP v3 a separate set of passwords is used. Note: trailing spaces or multiple spaces in the password are automatically removed. Important when a software downgrade to a version prior 10.7.0 is intended, re-enter the admin password followed by the words: md5 before the downgrade. This stores the password compatible with older releases.
	encrypted_auth_password	R/W	
	snmp_v3_security_level	R/W	Defines if login authorization and/or privacy are used.
	snmp_v3_auth_algorithm	R/W	Defines with which algorithm the authorization key is created and decoded.
	snmp_v3_privacy_algorithm	R/W	Defines which encryption method is used security level includes privacy.
	enter_snmp_v3_auth_password	X	Set a new SNMP v3 authentication password. This parameter only is required when SNMP v3 is used. This value correlates to the authorization key. No spaces are permitted and at least 8 character are required.
	encrypted_snmp_auth_password	R/W	
	enter_snmp_v3_privacy_password	X	Set a new encryption password. This parameter only is required when SNMP v3 user based privacy is used. If left empty, the SNMP v3 authentication password is also used for SNMP v3 privacy. No spaces are permitted and at least 8 character are required. IMPORTANT: This password must be different to the authentication password !
	encrypted_snmp_privacy_password	R/W	
group[DYNAMIC].			
	name	R/W	Enter a unique and descriptive name that identifies the group. At least 3 character are required.
	associated_views	R/W	A list which may point to one or several views that make up this group.
view[DYNAMIC].			
	name	R/W	Enter a unique and descriptive name that identifies the view. At least 3 character are required.

©2026 MICROSENS GmbH & Co. KG - Hamm/Germany - www.microsens.com

	associated_pattern	R/W	A list which may point to one or several pattern that make up this view.
pattern[DYNAMIC].			
	name	R/W	Enter a unique and descriptive name that identifies the pattern. At least 3 character are required.
	dotstring	R/W	A dotstring or partial dotstring can be defined here. Note that the first keyword (device, protocol, Management,App) must not be included. Example: port (for device.port) or port.config.alias
	access_rights	R/W	This defines in which way the dotstring is to be treated.
radius.			
	primary_auth_server_name	R/W	Symbolic name of the RADIUS server used for authentication.
	fallback_auth_server_name	R/W	Symbolic name of the RADIUS server used for authentication if the primary server is down. Leave empty when no fallback is required.
tacacs.			
	primary_auth_server_name	R/W	Symbolic name of the TACACS+ server used for authentication.
	fallback_auth_server_name	R/W	Symbolic name of the TACACS+ server used for authentication if the primary server is down. Leave empty when no fallback is required.
	privilege_level_0_user	R/W	This maps TACACS+ privilege levels to internal access model. Level 0 is lowest privilege level. Make sure the name entered here exists as local user name.
	privilege_level_1_user	R/W	This maps TACACS+ privilege levels to internal access model. Level 1 is a basic privilege level. Make sure the name entered here exists as local user name.
	privilege_level_15_user	R/W	This maps TACACS+ privilege levels to internal access model. Level 15 is highest privilege level and would usually be mapped to the admin user.
restrictions[DYNAMIC].			This table may be used to restrict access to the management system. Be careful not to lock your self out.
	name	R/W	Enter a unique and descriptive name that identifies the ip_address. At least 3 character are required.

©2026 MICROSENS GmbH & Co. KG - Hamm/Germany - www.microsens.com

	mode	R/W	The associated IP address may be permitted or denied. Use UNUSED to temporarily suspend an entry.
	ip_address	R/W	Enter an IP address or address range which is denied or permitted. For example, to describe a range of IP addresses from 192.168.0.1 to 192.168.255.255 you use: 192.168.0.0/16. Where 16 describes the number of bits in the IP address that are used for comparison (here192.168).
	number_of_logins	R	This value is incremented for each successful login.
login_status[32].			This table displays data which are read from the inserted SFPs.
	state	R	Indicates if this login record displays a currently active login or a history entry of a previous login which is logged off by now.
	user_name	R	User name for which this record applies.
	auth_name	R	Authorization name which maps to the local user names to define the actual access rights. For local authentication this value mirrors the user name. When RADIUS authentication is used, this reflects the name provided by the RADIUS server.
	login_id	R	Unique value to reference this login operation
	login_time_stamp	R	Indicated the time when this user has connected to this service.
	login_epoch	R	Login time stamp in Linux time since the epoch format.
	connect_time	R	Indicates since how long the connection is established. For logged off entries this indicates the last connect time of this entry.
	service	R	Displays which service was used to perform the login.
	remote_host	R	Displays from which remote host the login was performed. Details depend on the chosen interface.

©2026 MICROSENS GmbH & Co. KG - Hamm/Germany - www.microsens.com

3.4 Access Configuration Parameters

Group	**General Parameters**		
Path	Management.Access		
authentication_mode	This parameter defines against which database incoming user and password are verified.		
	Values	*LOCAL*	Verify against local database
		LOCAL_THEN_RADIUS	Verify against local database then try RADIUS server if user is not locally defined
		RADIUS	Verify against RADIUS server
		LOCAL_THEN_TACACS	Verify against local database then try TACACS+ server if user is not locally defined
		TACACS	Verify against TACACS+ server
		RADIUS_THEN_LOCAL	Verify against RADIUS server then try local database
		TACACS_THEN_LOCAL	Verify against TACACS+ server then try local database
	OID	1.3.6.1.4.1.3181.10.6.3.76.1 (accessAuthenticationMode)	

Group	**user**, dynamical size	
Path	Management.Access.user	
Description		
name	Unique name used to login to the system regardless of the management interface used. At least 3 character are required.	
	Value	String, max. 32 characters.
	OID	1.3.6.1.4.1.3181.10.6.3.76.2.1.2 (userName)
associated_groups	A user must be part of a group and inherits the rights of the groups and their views.	
	Value	String, max. 32 characters.
	OID	1.3.6.1.4.1.3181.10.6.3.76.2.1.3 (userAssociatedGroups)

©2026 MICROSENS GmbH & Co. KG - Hamm/Germany - www.microsens.com

general_access_rights	Limited access rights here overrule rights granted by the associated groups and their views. Use NO_ACCESS to temporarily suspend a user account. **Values** *NO_ACCESS* Neither read nor write of any parameter is permitted *READ_ONLY* This group may only read parameter *READ_WRITE* This group can read and write parameter **OID** 1.3.6.1.4.1.3181.10.6.3.76.2.1.4 (userGeneralAccessRights)
enable_telnet_access	Permit CLI user access via insecure telnet session or via local serial port. **Values** enabled, disabled **OID** 1.3.6.1.4.1.3181.10.6.3.76.2.1.5 (userEnableTelnetAccess)
enable_ssh_access	Permit CLI user access via secure shell. **Values** enabled, disabled **OID** 1.3.6.1.4.1.3181.10.6.3.76.2.1.6 (userEnableSshAccess)
enable_web_access	Permit user access via the web interface. **Values** enabled, disabled **OID** 1.3.6.1.4.1.3181.10.6.3.76.2.1.7 (userEnableWebAccess)
enable_snmp_access	Permit user access via SNMP of any version. Additionally use SNMP settings to restrict to only secure SNMP v3 if desired. **Values** enabled, disabled **OID** 1.3.6.1.4.1.3181.10.6.3.76.2.1.8 (userEnableSnmpAccess)
enable_nmp_access	Permit user access via the nmp network management application. **Values** enabled, disabled **OID** 1.3.6.1.4.1.3181.10.6.3.76.2.1.9 (userEnableNmpAccess)
enable_ftp_access	Permit ftp access for file transfers. **Values** enabled, disabled **OID** 1.3.6.1.4.1.3181.10.6.3.76.2.1.10 (userEnableFtpAccess)

©2026 MICROSENS GmbH & Co. KG - Hamm/Germany - www.microsens.com

enter_password

Set a new authentication password which replaces the previous one. This password applies to all user access methods except SNMP. For SNMP v3 a separate set of passwords is used. Note: trailing spaces or multiple spaces in the password are automatically removed. Important when a software downgrade to a version prior 10.7.0 is intended, re-enter the admin password followed by the words: md5 before the downgrade. This stores the password compatible with older releases.

Action Excecute command with parameter string max. 128 characters.

OID 1.3.6.1.4.1.3181.10.6.3.76.2.1.11 (userEnterPassword)

encrypted_auth_password

Value String, max. 128 characters.

OID 1.3.6.1.4.1.3181.10.6.3.76.2.1.12 (userEncryptedAuthPassword)

snmp_v3_security_level

Defines if login authorization and/or privacy are used.

Values

NO_AUTH_NO_PRIV	Open access. No authentication, no privacy.
AUTH_NO_PRIV	Use authentication to login but no encryption of the managed data.
AUTH_PRIV	Use authentication to login as well as encryption of the managed data.

OID 1.3.6.1.4.1.3181.10.6.3.76.2.1.13 (userSnmpV3SecurityLevel)

snmp_v3_auth_algorithm

Defines with which algorithm the authorization key is created and decoded.

Values

NO_AUTHENTICATION	No authentication is used.
MD5	MD-5 algorithm is used.
SHA	SHA-1 algorithm is used.

OID 1.3.6.1.4.1.3181.10.6.3.76.2.1.14 (userSnmpV3AuthAlgorithm)

©2026 MICROSENS GmbH & Co. KG - Hamm/Germany - www.microsens.com

snmp_v3_privacy_algorithm	Defines which encryption method is used security level includes privacy. **Values** *NO_PRIVACY* — No encryption for privacy is used. *DES* — CBC_DES is used to encrypt the payload. *AES* — AES-128 encryption is used to encrypt the payload *AES_192* — AES-192 bit encryption is used to encrypt the payload *AES_256* — AES-256 bit encryption is used to encrypt the payload **OID** 1.3.6.1.4.1.3181.10.6.3.76.2.1.15 (userSnmpV3PrivacyAlgorithm)
enter_snmp_v3_auth_password	Set a new SNMP v3 authentication password. This parameter only is required when SNMP v3 is used. This value correlates to the authorization key. No spaces are permitted and at least 8 character are required. **Action** Excecute command with parameter string max. 128 characters. **OID** 1.3.6.1.4.1.3181.10.6.3.76.2.1.16 (userEnterSnmpV3AuthPassword)
encrypted_snmp_auth_password	**Value** String, max. 128 characters. **OID** 1.3.6.1.4.1.3181.10.6.3.76.2.1.17 (userEncryptedSnmpAuthPassword)
enter_snmp_v3_privacy_password	Set a new encryption password. This parameter only is required when SNMP v3 user based privacy is used. If left empty, the SNMP v3 authentication password is also used for SNMP v3 privacy. No spaces are permitted and at least 8 character are required. IMPORTANT: This password must be different to the authentication password ! **Action** Excecute command with parameter string max. 128 characters. **OID** 1.3.6.1.4.1.3181.10.6.3.76.2.1.18 (userEnterSnmpV3PrivacyPassword)
encrypted_snmp_privacy_password	**Value** String, max. 128 characters. **OID** 1.3.6.1.4.1.3181.10.6.3.76.2.1.19 (userEncryptedSnmpPrivacyPassword)

©2026 MICROSENS GmbH & Co. KG - Hamm/Germany - www.microsens.com

Group	**group**, dynamical size
Path	Management.Access.group
Description	

name	Enter a unique and descriptive name that identifies the group. At least 3 character are required.	
	Value	String, max. 32 characters.
	OID	1.3.6.1.4.1.3181.10.6.3.76.3.1.2 (groupName)
associated_views	A list which may point to one or several views that make up this group.	
	Value	String, max. 32 characters.
	OID	1.3.6.1.4.1.3181.10.6.3.76.3.1.3 (groupAssociatedViews)

Group	**view**, dynamical size
Path	Management.Access.view
Description	

name	Enter a unique and descriptive name that identifies the view. At least 3 character are required.	
	Value	String, max. 32 characters.
	OID	1.3.6.1.4.1.3181.10.6.3.76.4.1.2 (viewName)
associated_pattern	A list which may point to one or several pattern that make up this view.	
	Value	String, max. 32 characters.
	OID	1.3.6.1.4.1.3181.10.6.3.76.4.1.3 (viewAssociatedPattern)

Group	**pattern**, dynamical size
Path	Management.Access.pattern
Description	

name	Enter a unique and descriptive name that identifies the pattern. At least 3 character are required.	
	Value	String, max. 32 characters.
	OID	1.3.6.1.4.1.3181.10.6.3.76.5.1.2 (patternName)

©2026 MICROSENS GmbH & Co. KG - Hamm/Germany - www.microsens.com

dotstring	A dotstring or partial dotstring can be defined here. Note that the first keyword (device, protocol, Management,App) must not be included. Example: port (for device.port) or port.config.alias **Value** String, max. 128 characters. **OID** 1.3.6.1.4.1.3181.10.6.3.76.5.1.3 (patternDotstring)
access_rights	This defines in which way the dotstring is to be treated. **Values** *NO_ACCESS* Do not permit any access. (Not even read) *READ_ONLY* View of associated dotstring is enabled *READ_WRITE* View of associated dotstring is disabled **OID** 1.3.6.1.4.1.3181.10.6.3.76.5.1.4 (patternAccessRights)

Group	**restrictions**, dynamical size
Path	Management.Access.restrictions
Description	This table may be used to restrict access to the management system. Be careful not to lock your self out.

name	Enter a unique and descriptive name that identifies the ip_address. At least 3 character are required. **Value** String, max. 32 characters. **OID** 1.3.6.1.4.1.3181.10.6.3.76.8.1.2 (restrictionsName)
mode	The associated IP address may be permitted or denied. Use UNUSED to temporarily suspend an entry. **Values** *UNUSED* Entry is suspended *PERMIT* Associated IP address is permitted *DENY* Associated IP address is not accepted. **OID** 1.3.6.1.4.1.3181.10.6.3.76.8.1.3 (restrictionsMode)
ip_address	Enter an IP address or address range which is denied or permitted. For example, to describe a range of IP addresses from 192.168.0.1 to 192.168.255.255 you use: 192.168.0.0/16. Where 16 describes the number of bits in the IP address that are used for comparison (here192.168). **Value** String, max. 64 characters. **OID** 1.3.6.1.4.1.3181.10.6.3.76.8.1.4 (restrictionsIpAddress)

Group	**radius**
Path	Management.Access.radius
Description	

©2026 MICROSENS GmbH & Co. KG - Hamm/Germany - www.microsens.com

primary_auth_server_name	Symbolic name of the RADIUS server used for authentication. **Value** String, max. 32 characters. **OID** 1.3.6.1.4.1.3181.10.6.3.76.6.1.2 (radiusPrimaryAuthServerName)
fallback_auth_server_name	Symbolic name of the RADIUS server used for authentication if the primary server is down. Leave empty when no fallback is required. **Value** String, max. 32 characters. **OID** 1.3.6.1.4.1.3181.10.6.3.76.6.1.3 (radiusFallbackAuthServerName)

Group	**tacacs**
Path	Management.Access.tacacs
Description	

primary_auth_server_name	Symbolic name of the TACACS+ server used for authentication. **Value** String, max. 32 characters. **OID** 1.3.6.1.4.1.3181.10.6.3.76.7.1.2 (tacacsPrimaryAuthServerName)
fallback_auth_server_name	Symbolic name of the TACACS+ server used for authentication if the primary server is down. Leave empty when no fallback is required. **Value** String, max. 32 characters. **OID** 1.3.6.1.4.1.3181.10.6.3.76.7.1.3 (tacacsFallbackAuthServerName)
privilege_level_0_user	This maps TACACS+ privilege levels to internal access model. Level 0 is lowest privilege level. Make sure the name entered here exists as local user name. **Value** String, max. 32 characters. **OID** 1.3.6.1.4.1.3181.10.6.3.76.7.1.4 (tacacsPrivilegeLevel0User)
privilege_level_1_user	This maps TACACS+ privilege levels to internal access model. Level 1 is a basic privilege level. Make sure the name entered here exists as local user name. **Value** String, max. 32 characters. **OID** 1.3.6.1.4.1.3181.10.6.3.76.7.1.5 (tacacsPrivilegeLevel1User)

©2026 MICROSENS GmbH & Co. KG - Hamm/Germany - www.microsens.com

privilege_level_15_user	This maps TACACS+ privilege levels to internal access model. Level 15 is highest privilege level and would usually be mapped to the admin user.	
	Value	String, max. 32 characters.
	OID	1.3.6.1.4.1.3181.10.6.3.76.7.1.6 (tacacsPrivilegeLevel15User)

©2026 MICROSENS GmbH & Co. KG - Hamm/Germany - www.microsens.com

3.5 Access Status Parameters

Group	General Parameters
Path	Management.Access
number_of_logins	This value is incremented for each successful login. Value Number in range 0-0xFFFFFFFF OID 1.3.6.1.4.1.3181.10.6.3.76.100 (accessNumberOfLogins)

©2026 MICROSENS GmbH & Co. KG - Hamm/Germany - www.microsens.com

4 Access Control List (ACL)

4.1 Key Features

Access Control Lists (ACL)

(Not available with hardware 1.5 / Only available on ports [2/*] with hardware 1.6)
ACL permit comprehensive wirespeed filtering of incoming data. This advanced feature may be used to block malicious or unwanted data from entering the network.

Properly defined ACLs greatly increase network security by blocking undesired traffic.

Dynamic ACL via RADIUS

(Not available with hardware 1.5 / Only available on ports [2/*] with hardware 1.6)
Dynamic ACL ease deployment of ACL settings by centralizing their setup. The ACL setting are received during 802.1X port authentication and are automatically applied.

Simplifies ACL configuration in larger deployments.

4.2 Functional Description

Access Control Lists (ACL) are used to limit access to the network by filtering at frame layer. Rules are the heart of the logic. Rules may be defined to specify certain IP address ranges, a certain MAC, a certain VLAN or special protocol that is to be filtered out of the data stream to be treated specially.

Usually, a number of rules are needed to perform a certain function and thus several rules can be specified as a single list entry. A list in turn can contain many such entries. The active_filter_port_config table contains a pointer to name of acl list entries. The port filter are capable of filtering the data traffic entering a port in real time, with no additional latency being introduced. This works much like a firewall, albeit at frame level.

In addition to the port filter, there are other tables that reference the ACL list. The security feature ARP inspection, for example, points to ACL lists elements for manually declared IP/MAC relations. Note that this application only uses a subset of the options available for a rules definition. Another reference to ACL tables in made from the WIFI section, whereby the ACL list is used to define the firewall rules that protect from malicious data entering the wireless network.

The setup of rules, grouped in list entries and lists elements being referenced from yet other tables can become complex to setup. Therefore, it is highly recommended to make use of the various description fields to comment the use and function of each entry. Also note that rules are evaluated in the order of appearance in the configuration. Thus place more specific entries first, and less precise entries last. In all tables where ACLs are used there is also a default logic parameter that defines what happens if none of the ACL rules has matched.

In this way it is generally possible to provide a blocking list, where everything is permitted except the matched frames or an acceptance list, where everything is blocked except for specifically matched frames. Which behavior is more suitable depends on the desired result and the type of input data to match.

©2026 MICROSENS GmbH & Co. KG - Hamm/Germany - www.microsens.com

4.2.1 Important notes with regard to ACL use

Note 1

Be sure to thoroughly test ACLs in a test bed before going online. As soon as the first permit rule is applied, it implies that all other devices, not part of the permission, are blocked. This even includes the local switch itself. Also with a deny rule it easy to lock yourself out unintentionally.

Note 2

It is strongly recommended to add a permit-rule that covers ARP (address resolution protocol) in order to ensure address resolution can operate correctly. Failure to do so may result in the attached device to not even be able to send out ping.

Note 3

ACL are designed to operate with IPv4 addresses. (Ethertype = 0x0800, e.g. TCP or UDP via IPv4). ARP is not supported automatically and need to be permitted separately. A possible solution is the following additional rule (the source MAC may be defined optionally):

```
Management.ACL.rules[permit_arp_pc1].name = permit_arp_pc1
Management.ACL.rules[permit_arp_pc1].description = Permit all ARP from PC1
Management.ACL.rules[permit_arp_pc1].mode = PERMIT
Management.ACL.rules[permit_arp_pc1].ether_type = 2054
Management.ACL.rules[permit_arp_pc1].protocol =
Management.ACL.rules[permit_arp_pc1].vlan_id =
Management.ACL.rules[permit_arp_pc1].source_mac = 00:11:22:33:44:55
Management.ACL.rules[permit_arp_pc1].source_ip =
Management.ACL.rules[permit_arp_pc1].source_mask =
Management.ACL.rules[permit_arp_pc1].source_port =
Management.ACL.rules[permit_arp_pc1].destination_mac =
Management.ACL.rules[permit_arp_pc1].destination_ip =
Management.ACL.rules[permit_arp_pc1].destination_mask =
Management.ACL.rules[permit_arp_pc1].destination_port =
```

©2026 MICROSENS GmbH & Co. KG - Hamm/Germany - www.microsens.com

4.3 ACL CLI Command Reference

The following table lists all CLI commands applicable for this feature section. For each parameter, the access mode is given:

R = Read Only, R/W = Read/Write, X = Executable Action.

Please note that the effective access rights are dependent on the login level of the user.

Category	Group	Table	ParameterOptions	Access	Description
Management.					
	acl.				Access Control Lists
			enable_acl_filtering	R/W	General enable of access control list operation. Note that this function need only be enabled when port filtering is used. For WIFI, DHCP or ARP inspection function this enable parameter is meaningless..
		active_filter_port_config[PORT].			This table defines the parameter for access control of incoming data.
			enable_acl_filtering	R/W	Generally enables access control checking for this particular port. The details need to be configured in the list and rules tables. Tip: Be sure to include a permit-rule for ARP when creating the tables. Also include the switch itself in the rules.
			acl_list_name	R/W	Name of the ACL (access control list) which apply to this port. Several ACL lists may be specified with a comma separated list. Example acl1, otherlist
		list[DYNAMIC].			This table is used to combine and group individual rules for easier reference.
			name	R/W	Unique name to reference this entry and to remember whose MAC address is entered.
			description	R/W	Enter any information required to remember what this rule is intended to do.
			rules	R/W	Contains the names of rules that apply to this list separated by commas. Please beware of typing errors. Example: rule1,rule2,other_rule
		rules[DYNAMIC].			For filtering of incoming data this table defines the filter rules. The same table also applies to ARP inspection. In this use this table statically defines valid MAC/IP/ VLAN relationships. Tip: Be sure to include a permit-rule for ARP when creating ACL tables. Also include the switch itself in these rules.

©2026 MICROSENS GmbH & Co. KG - Hamm/Germany - www.microsens.com

name	R/W	Unique name to reference this entry and to remember whose MAC address is entered.
description	R/W	Enter any information required to remember what this rule is intended to do.
mode	R/W	Use UNUSED to temporarily suspend an entry. Use ACCEPT when the matched entry should be treated as valid. Use DENY when a matched entry should be treated as invalid match.
ether_type	R/W	Use 2048 to match IPv4 (0x800), 34525 to match IPv6 (0x86DD). A value of 0 ignores this field. The field is also ignored for ARP inspection rules.
protocol	R/W	Use 6 to specifiy TCP, 17 for UDP, etc. Use to ignore the protocol field. This field is also ignored for ARP inspection rules.
vlan_id	R/W	VLAN ID for which this entry is valid. A value of 0 ignores this field.
source_mac	R/W	MAC address entry.
source_ip	R/W	IP address associated with the given MAC.
source_mask	R/W	The mask my be used to create a valid address range.
source_port	R/W	May be used to specify a specific udp/tcp port. A value of 0 ignores this field. The field is also ignored for ARP inspection rules.
destination_mac	R/W	MAC address entry. This field is ignored for ARP inspection rules.
destination_ip	R/W	IP address associated with the given MAC. This field is ignored for ARP inspection rules.
destination_mask	R/W	The mask my be used to create a valid address range. This field is ignored for ARP inspection rules.
destination_port	R/W	May be used to specify a specific udp/tcp port. A value of 0 ignores this field. The field is also ignored for ARP inspection rules.

©2026 MICROSENS GmbH & Co. KG - Hamm/Germany - www.microsens.com

4.4 ACL Configuration Parameters

Group	**General Parameters**
Path	Management.ACL

enable_acl_filtering	General enable of access control list operation. Note that this function need only be enabled when port filtering is used. For WIFI, DHCP or ARP inspection function this enable parameter is meaningless.. **Values** enabled, disabled **OID** 1.3.6.1.4.1.3181.10.6.3.51.1 (aclEnableAclFiltering)

Group	**active_filter_port_config**, for all ports[0..31]
Path	Management.ACL.active_filter_port_config[port]
Description	This table defines the parameter for access control of incoming data.

enable_acl_filtering	Generally enables access control checking for this particular port. The details need to be configured in the list and rules tables. Tip: Be sure to include a permit-rule for ARP when creating the tables. Also include the switch itself in the rules. **Values** enabled, disabled **OID** 1.3.6.1.4.1.3181.10.6.3.51.2.1.2 (activeFilterPortConfigEnableAclFiltering)
acl_list_name	Name of the ACL (access control list) which apply to this port. Several ACL lists may be specified with a comma separated list. Example acl1, otherlist **Value** String, max. 128 characters. **OID** 1.3.6.1.4.1.3181.10.6.3.51.2.1.3 (activeFilterPortConfigAclListName)

Group	**list**, dynamical size
Path	Management.ACL.list
Description	This table is used to combine and group individual rules for easier reference.

name	Unique name to reference this entry and to remember whose MAC address is entered. **Value** String, max. 32 characters. **OID** 1.3.6.1.4.1.3181.10.6.3.51.3.1.2 (listName)

©2026 MICROSENS GmbH & Co. KG - Hamm/Germany - www.microsens.com

description	Enter any information required to remember what this rule is intended to do.
	Value String, max. 128 characters.
	OID 1.3.6.1.4.1.3181.10.6.3.51.3.1.3 (listDescription)
rules	Contains the names of rules that apply to this list separated by commas. Please beware of typing errors. Example: rule1,rule2,other_rule
	Value String, max. 512 characters.
	OID 1.3.6.1.4.1.3181.10.6.3.51.3.1.4 (listRules)

Group	**rules**, dynamical size
Path	Management.ACL.rules
Description	For filtering of incoming data this table defines the filter rules. The same table also applies to ARP inspection. In this use this table statically defines valid MAC/IP/VLAN relationships. Tip: Be sure to include a permit-rule for ARP when creating ACL tables. Also include the switch itself in these rules.

name	Unique name to reference this entry and to remember whose MAC address is entered.
	Value String, max. 32 characters.
	OID 1.3.6.1.4.1.3181.10.6.3.51.4.1.2 (rulesName)
description	Enter any information required to remember what this rule is intended to do.
	Value String, max. 128 characters.
	OID 1.3.6.1.4.1.3181.10.6.3.51.4.1.3 (rulesDescription)
mode	Use UNUSED to temporarily suspend an entry. Use ACCEPT when the matched entry should be treated as valid. Use DENY when a matched entry should be treated as invalid match.
	Values *UNUSED* Entry is suspended
	PERMIT Associated IP address is permitted
	DENY Associated IP address is not accepted.
	OID 1.3.6.1.4.1.3181.10.6.3.51.4.1.4 (rulesMode)
ether_type	Use 2048 to match IPv4 (0x800), 34525 to match IPv6 (0x86DD). A value of 0 ignores this field. The field is also ignored for ARP inspection rules.
	Value Number in range 0-65535
	OID 1.3.6.1.4.1.3181.10.6.3.51.4.1.5 (rulesEtherType)
protocol	Use 6 to specifiy TCP, 17 for UDP, etc. Use to ignore the protocol field. This field is also ignored for ARP inspection rules.
	Value Number in range 0-255
	OID 1.3.6.1.4.1.3181.10.6.3.51.4.1.6 (rulesProtocol)

©2026 MICROSENS GmbH & Co. KG - Hamm/Germany - www.microsens.com

vlan_id	VLAN ID for which this entry is valid. A value of 0 ignores this field.	
	Value	Number in range 0-4095
	OID	1.3.6.1.4.1.3181.10.6.3.51.4.1.7 (rulesVlanId)
source_mac	MAC address entry.	
	Format	MAC Address *hh-hh-hh-hh-hh-hh* (*hh* = hexadecimal number between 00 to ff)
	OID	1.3.6.1.4.1.3181.10.6.3.51.4.1.8 (rulesSourceMac)
source_ip	IP address associated with the given MAC.	
	Format	IPv4 Address *ddd.ddd.ddd.ddd* (*ddd* = decimal number between 000 to 255)
	OID	1.3.6.1.4.1.3181.10.6.3.51.4.1.9 (rulesSourceIp)
source_mask	The mask my be used to create a valid address range.	
	Format	IPv4 Address *ddd.ddd.ddd.ddd* (*ddd* = decimal number between 000 to 255)
	OID	1.3.6.1.4.1.3181.10.6.3.51.4.1.10 (rulesSourceMask)
source_port	May be used to specify a specific udp/tcp port. A value of 0 ignores this field. The field is also ignored for ARP inspection rules.	
	Value	Number in range 0-65535
	OID	1.3.6.1.4.1.3181.10.6.3.51.4.1.11 (rulesSourcePort)
destination_mac	MAC address entry. This field is ignored for ARP inspection rules.	
	Format	MAC Address *hh-hh-hh-hh-hh-hh* (*hh* = hexadecimal number between 00 to ff)
	OID	1.3.6.1.4.1.3181.10.6.3.51.4.1.12 (rulesDestinationMac)
destination_ip	IP address associated with the given MAC. This field is ignored for ARP inspection rules.	
	Format	IPv4 Address *ddd.ddd.ddd.ddd* (*ddd* = decimal number between 000 to 255)
	OID	1.3.6.1.4.1.3181.10.6.3.51.4.1.13 (rulesDestinationIp)
destination_mask	The mask my be used to create a valid address range. This field is ignored for ARP inspection rules.	
	Format	IPv4 Address *ddd.ddd.ddd.ddd* (*ddd* = decimal number between 000 to 255)
	OID	1.3.6.1.4.1.3181.10.6.3.51.4.1.14 (rulesDestinationMask)

©2026 MICROSENS GmbH & Co. KG - Hamm/Germany - www.microsens.com

destination_port	May be used to specify a specific udp/tcp port. A value of 0 ignores this field. The field is also ignored for ARP inspection rules. **Value** Number in range 0-65535 **OID** 1.3.6.1.4.1.3181.10.6.3.51.4.1.15 (rulesDestinationPort)

©2026 MICROSENS GmbH & Co. KG - Hamm/Germany - www.microsens.com

5 Web Manager

5.1 Key Features

Base Features

Integrated Web Manager with graphical user interface (GUI) for device configuration and administration using a standard web browser. The web interface may be used to configure all aspects of the device in a convient manner.

Web Authentication

In order access the web interface a login/password sequence as globally defined for the device in the access section is required.

Same access protection and credentials regardsless if selected user interface type enforces uniform security.

RADIUS access verification

Users that wish to gain system access may be authenticated via a RADIUS server instead of the locally stored names. Fallback to local is possible.

Centralized access control.

HTTPS

HTTPS offers secure encrypted data transport. Alternative standard HTTP is also supported. When HTTPS is configured unsecure HTTP traffic is automatically blocked. Since 10.7.7 only TLS 1.2 is supported. For older TLS versions a new parameter setting (LESS_SECURE) was added.

Enforce secure web access with high security level. In HTTPS setting only TLS1.2 encryption is accepted.

Less Secure HTTPS

Since 10.7.7 the less secure standards TSL1.0 and TSL1.1 as well as SSLv2 and SSLv3 are no longer supported when HTTPS is selected. The less secure setting for HTTPS makes these older standard available if required.

Permit use with older equipment that does not support current TLS1.2 standard. In default setting this feature is disabled and thus use of more secure TLS1.2 is automatically enforced.

Custom SSL Certificates

Custom SSL certificate for secure web access can be up and downloaded via file transfer. Also chain files are supported.

Enables operator to use private certificates that adhere to a given company policy.

Full Functional Support

All features of the device, including actions functions, are accessible from the web interface.

No need to open a parallel Telnet session for ping tests or similar special functions

©2026 MICROSENS GmbH & Co. KG - Hamm/Germany - www.microsens.com

Animated Device Graphics

When a device is selected all LED and connectors are shown as located on the device. Colored borders indicate the individual status. LEDs are showing identical to the real device.

Graphic help to locate the connectors. Visual display illustrates overall status at one glance.

Firmware Update

Since all functions of the device are available, also firmware update is easily possible.

All management can be done from the web interface.

Online Documentation

The product offers a detailed and automatically updated handbook. This handbook is readily available from the web interface.

Up-to-date documentation readily accessible.

SNMP MIB download

All MICROSENS specific SNMP MIB files can be downloaded from the web interface. The MIB files are required when G6 specific functions shall be accessible via SNMP interface.

Up-to-date online MIBs help operator to select and find the proper MIBs.

Event Display

the 20 latest events (traps) are visible in the web interface for immediate detection of special conditions. An individual log filter may be set.

Previously, event where only visible in the CLI or via NMP or SNMP.

REST API interface

All configuration, status and SmartOffice parameter can be accessed remotely using an REST interface. Versions with and without JSON are available. Multiple objects can be processed per message. All access protection schemes apply. SSH is used.

This permits secure machine-to-machine communication mostly intenden for but not limited to IoT applications.

Configurable Web GUI

In addition to the normal Web interface, an additonal fully configurable interface exist which can be used to provide custom GUI for SmartOffice and other applications.

Simple operation of Smart Application can be realized.

Responsive Web GUI

The configurable Web GUI has been further enhanced to support PC and Mobile devices and in any orientation with adapting screen elements.

Enhanced mobile device support.

Web GUI Styles

The configurable Web GUI supports style templates which can fully alter the appearance including color, background images and fonts.

Enhanced customizing for SmartOffice installations.

©2026 MICROSENS GmbH & Co. KG - Hamm/Germany - www.microsens.com

5.2 Functional Description

Switch status and configuration parameter values can be accessed via the integrated Web Manager using a standard web browser. For secure access, HTTPS protocol can be enabled (default setting).

> ***ATTENTION:*** ***When using NMP for device management, HTTPS protocol is mandatory. When changing access protocol to HTTP, NMP cannot communicate with device.***

5.2.1 Browser Compatibility

The Web manager content was designed for maximum compatibility with standard web browsers like Microsoft® Internet Explorer® 8 and Mozilla® Firefox® 14. For correct function the Web Manager requires Jave Script suppport to be enabled. For best view we recommend Firefox Version 14.

5.2.2 Start Page

To access the Web Manager, open a web browser and insert the device IP address into the address field. The start page of the device should be displayed immediately. Without a valid login, only basic device status information is displayed. No changes to the device settings can be made, most of the menu items on the sidebar are deactivated.

> ***INFO:*** *For security reasons, the default protocol for Web Manager access is HTTPS. When typing the device IP address, use 'https://' prefix for protocol selection. It may be required to confirm a security exception before the page is displayed by the browser. This is no security risk. The protocol used can be changed in the Web Manager configuration section (CLI command: 'Management.WEB.protocol = DISABLED|HTTP|HTTPS').*

©2026 MICROSENS GmbH & Co. KG - Hamm/Germany - www.microsens.com

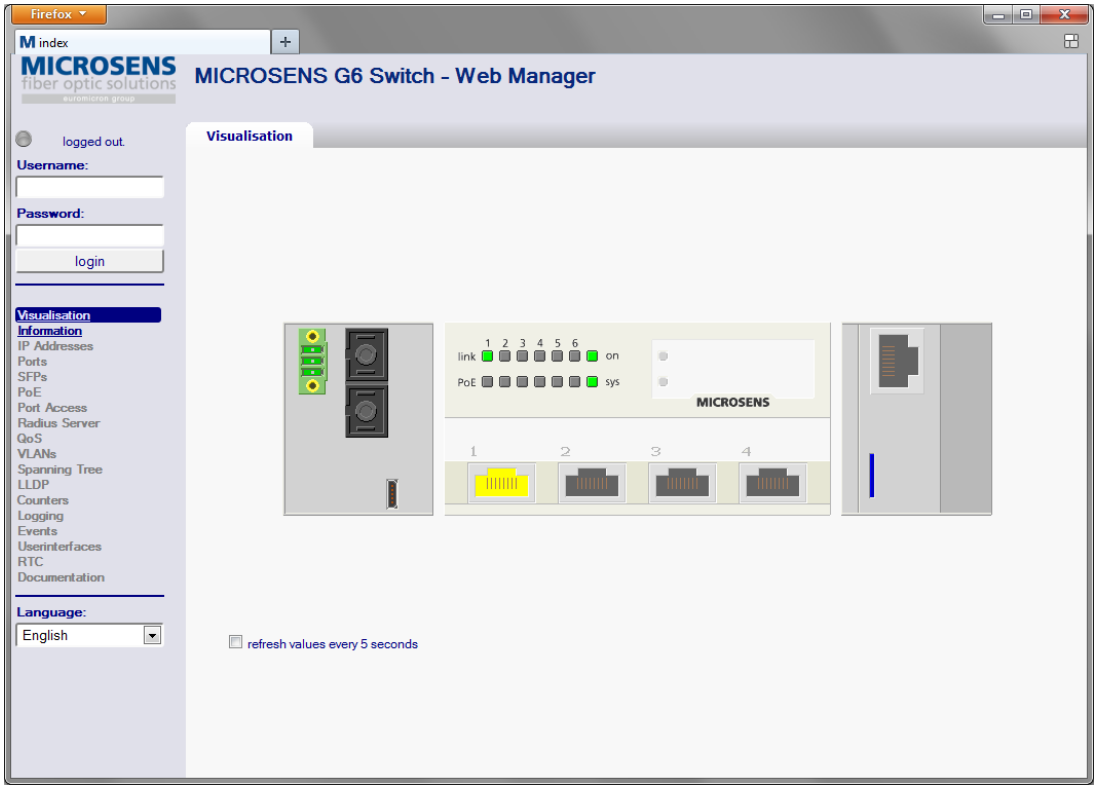

5.2.3 Login

For full access to the Web Manager, a login with a valid user name/password is required. Enter the login credential into the fields on the sidebar and click the 'Login' button. The sidebar menu items become activated for full access to all functions.

©2026 MICROSENS GmbH & Co. KG - Hamm/Germany - www.microsens.com

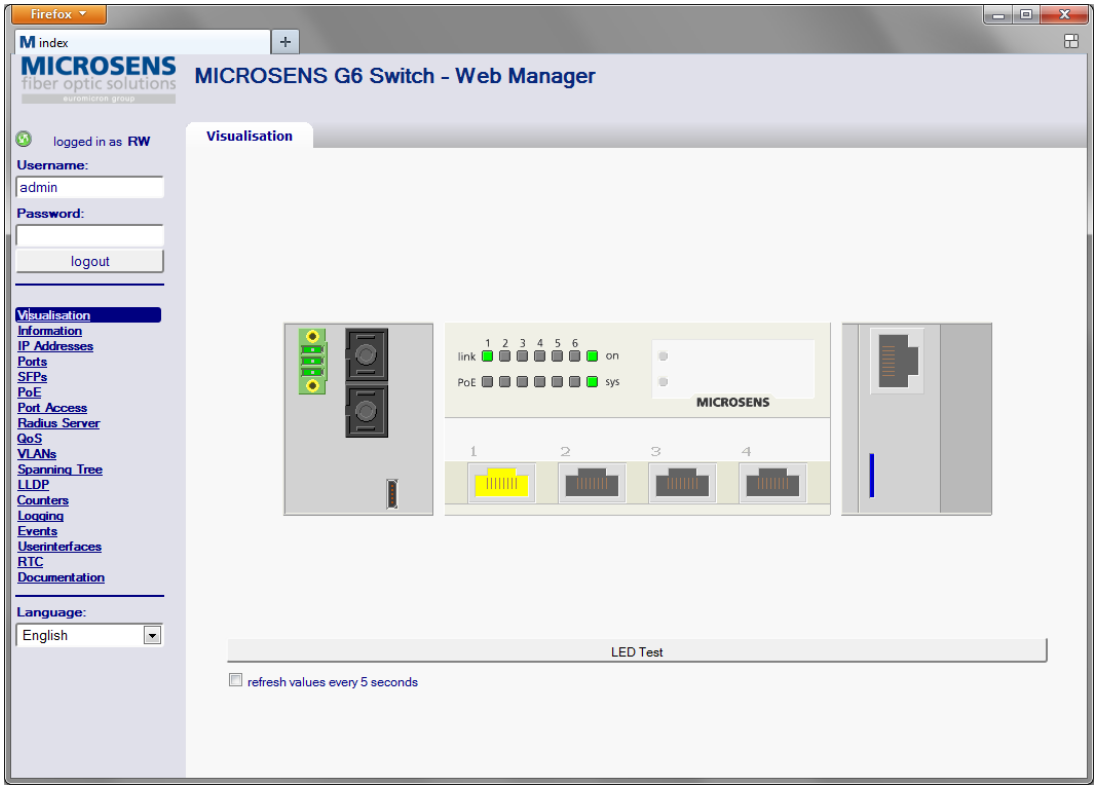

©2026 MICROSENS GmbH & Co. KG - Hamm/Germany - www.microsens.com

5.3 WEB CLI Command Reference

The following table lists all CLI commands applicable for this feature section. For each parameter, the access mode is given:

R = Read Only, R/W = Read/Write, X = Executable Action.

Please note that the effective access rights are dependent on the login level of the user.

Category	Group	Table	Parameter	Options	Access	Description
Management.						
	web.					Web interface settings and SmartOffice web gui definitions
			protocol		R/W	Define which web client access protocol is used. Changes only become active after restarting the web server or the whole device.
			web_timeout		R/W	Inactivity time out in seconds. When a web session is unused for the specified duration, the user is logged off. Value change applied on next login.
			http_port_web		R/W	Port used for http protocol access. Standard port is 80. Can be changed when non-standard port shall be used for Web management traffic. Changes only become active after restarting the web server or the whole device.
			https_port_web		R/W	Port used for https protocol access. Standard port is 443. Can be changed when non-standard port shall be used for Web management traffic. Changes only become active after restarting the web server or the whole device.
			certificate_source		R/W	Determines if internal default certificate is used or a customer downloaded certificate is used. The custom certificate needs to be specified after selecting the CUSTOM option using the Management.files.certificate.activate_for_web command.
			enter_cert_passphrase		X	Set a new certificate passphrase. This parameter is only required when certificate_source is set to CUSTOM and the activated certificate requires a passphrase
			encrypted_cert_passphrase		R/W	
			login_message		R/W	This message is displayed during login to the management web server. Changes only become active after restarting the web server or the whole device.
			options		R/W	Optional parameter may be defined here in a comma separated list. Rendering options defined here, will be applied to all gui_pages and gui_elements, unless overridden with options defined at element level.
			restart_web_server		X	This command will restart the web server. Currently open web sessions will be lost. The connection to nmp will briefly be interrupted. Syntax: restart_web_server = CONFIRM.
		gui_page[DYNAMIC].				Define the look and feel of the SmartOffice graphical user interface.
			name		R/W	Unique name under which the page is reference a in the web gui.
			style_name		R/W	Enter a style name as defined in gui_style table. The style defines the colors of the page and its elements.

©2026 MICROSENS GmbH & Co. KG - Hamm/Germany - www.microsens.com

element_placement	R/W	Determines how the gui_elements are placed in the browser window.
limited_to_users	R/W	When left blank, every user has access to the gui page and its associated elements. When one or more comma separated user names are defined, then local or remote access to the page and its elements is limited to the listed users.
options	R/W	Optional additional parameter may be defined here in a comma separated list. Rendering options defined here, will be applied to all elements placed on the page, unless overridden with options defined at element level.
gui_element[DYNAMIC].		Defines a single element of the user interface gui. Defines position as well as content and function.
name	R/W	Unique name of the element.
type	R/W	Predefined type of element. Choose to suit the functionality needed.
page	R/W	Name of gui page(s) on which this element is placed on. Use comma to specify several pages.
style_name	R/W	When undefined, the style of the parent element is inherited. Can be set to a style name as defined in gui_style table. The style defines the colors of the element.
visibility	R/W	Defines if an element is rendered on the gui.
auto_save	R/W	When enabled, this gui element saves the current setting as the default value to be used should the system restart.
remote_accessible	R/W	When enabled, this gui element may be accessed via the remote access interface. Use this parameter to restrict the remote interface to the required elements only.
sensor_attribute	R/W	Indicates which type of sensor this gui element simulates when being operated. If left blank the element will register with its type as default.
script_name	R/W	When this element is updated the script specified in this parameter is executed. If the parameter is left blank, the standard MS_SmartOfficeControl.ms script is executed. The specified script should not contain any time consuming functions. Syntax: app/file:sub par1 par2 Parameter are optional. When the app part is not supplied the file is expected in xml_cli_scripts folder.
watched_element	R/W	Here a valid CLI command may be entered to display any system parameter. Status or config values may be specified. Alternatively, the content of a persistent variable may be watched. Such variables can be maintained by microScript. Syntax: $varname.
order	R/W	Elements are displayed in this order. Elements with same index appear in the order they are configured. There may be gaps in the order of elements.
height	R/W	Height of element in percent of container height. To specify different values for horizontal and vertical display use hor/vert syntax like 10/20.
width	R/W	Width of element in percent of container width. To specify different values for horizontal and vertical display use hor/vert syntax like 10/20.

©2026 MICROSENS GmbH & Co. KG - Hamm/Germany - www.microsens.com

top_margin	R/W	Defines the distance of element in percent of container height below the above element. Can be used to position element in relation to others. To specify different values for horizontal and vertical display use hor/vert syntax like 16/24.
left_margin	R/W	Defines the distance of element in percent of container width from the end of the previous element to the left. Can be used to position element in relation to others. To specify different values for horizontal and vertical display use hor/vert syntax like 5/2.
header	R/W	Optional title to be displayed above the element. May be left empty.
text	R/W	Comma separated list of texts. Appearance depends on the type of element.
value	R/W	Comma separated list of values. Usage depends on the type of element.
start_value	R/W	Default or start value which is used when the element is first created. This value is automatically updated to reflect the last setting when the auto_save parameter is enabled. This value only applies to active elements.
image	R/W	Comma separated list of images to display on the element.
options	R/W	Optional element specific additional parameter may be placed here.
gui_style[DYNAMIC].		Define the colors of the SmartOffice graphical user interface.
name	R/W	Unique name under which the page is reference a in the web gui.
background_color	R/W	Canvas background color. Three valid formats permitted: red, #ff0000, rgb(255,0,0). Order of preference stongest first: local element.option, element.style_name, page.style_name, browser_default. Optionally, transparency is supported with a 4th value in rgb or # syntax. A color gradient can be specified by using two semicolon separated color values.
box_passive_color	R/W	Color of passive element. For details see background_color help.
box_active_color	R/W	Color of active (editable) element. For details see background_color help.
selected_color	R/W	Color of selected element. For details see background_color help.
unselected_color	R/W	Color of unselected element. For details see background_color help.
selected_text_color	R/W	Text color of selected option of an element. For details see background_color help.
unselected_text_color	R/W	Text color of not selected option of an element. For details see background_color help.
content_text_color	R/W	Color of variable text of an element. For details see background_color help.
header_text_color	R/W	Color of fixed element label or header. For details see background_color help.
accent_color	R/W	Color of possible element accent. For details see background_color help.

©2026 MICROSENS GmbH & Co. KG - Hamm/Germany - www.microsens.com

gradient	R/W	A gradient will render the top of the element brighter and gradually become darker towards the bottom. Use a value from 2 to 255 to make elements appear more three dimensional. An optional angle value can be used for sideway graduation. Syntax: 30;90 (note the semicolon!)
shadow	R/W	Width of element shadow. 0 to turn off shadows.
radius	R/W	Radius of box to create rounded elements. The value is defined as % of window size. Also float values like 1.5 are permitted.
background_image	R/W	A page background image may be specified. The image is stretched to fit the page dimensions. A horizontal and vertical image may be specified using \ as delimiter: hor.jpg\vert.jpg
font	R/W	Optional a font may be specified that is used by all elements on the page. Note that the font must be installed on the displaying device.

©2026 MICROSENS GmbH & Co. KG - Hamm/Germany - www.microsens.com

5.4 WEB Configuration Parameters

Group	**General Parameters**		
Path	Management.WEB		
protocol	Define which web client access protocol is used. Changes only become active after restarting the web server or the whole device.		
	Values	*DISABLED*	Web interface is disabled
		HTTP_UNSECURE	Standard client interface without encryption
		HTTPS_LESS_SECURE	Secure client interface which still permits use of deprected versions TLS1.0 and 1.1 as well as SSLv2 and SSLv3
		HTTPS_SECURE	Secure client interface which requires at least TLS 1.2
	OID	1.3.6.1.4.1.3181.10.6.3.63.1 (webProtocol)	
web_timeout	Inactivity time out in seconds. When a web session is unused for the specified duration, the user is logged off. Value change applied on next login.		
	Value	Number in range 0-65535	
	OID	1.3.6.1.4.1.3181.10.6.3.63.2 (webWebTimeout)	
http_port_web	Port used for http protocol access. Standard port is 80. Can be changed when non-standard port shall be used for Web management traffic. Changes only become active after restarting the web server or the whole device.		
	Value	Number in range 0-65535	
	OID	1.3.6.1.4.1.3181.10.6.3.63.3 (webHttpPortWeb)	
https_port_web	Port used for https protocol access. Standard port is 443. Can be changed when non-standard port shall be used for Web management traffic. Changes only become active after restarting the web server or the whole device.		
	Value	Number in range 0-65535	
	OID	1.3.6.1.4.1.3181.10.6.3.63.4 (webHttpsPortWeb)	
certificate_source	Determines if internal default certificate is used or a customer downloaded certificate is used. The custom certificate needs to be specified after selecting the CUSTOM option using the Management.files.certificate.activate_for_web command.		
	Values	*INTERN*	Use internal default certificate
		CUSTOM	Use custom certificate. Needs further activation via certificate.activate = certificate command.
	OID	1.3.6.1.4.1.3181.10.6.3.63.5 (webCertificateSource)	

©2026 MICROSENS GmbH & Co. KG - Hamm/Germany - www.microsens.com

enter_cert_passphrase	Set a new certificate passphrase. This parameter is only required when certificate_source is set to CUSTOM and the activated certificate requires a passphrase **Action** Excecute command with parameter string max. 128 characters. **OID** 1.3.6.1.4.1.3181.10.6.3.63.6 (webEnterCertPassphrase)
encrypted_cert_passphrase	**Value** String, max. 128 characters. **OID** 1.3.6.1.4.1.3181.10.6.3.63.7 (webEncryptedCertPassphrase)
login_message	This message is displayed during login to the management web server. Changes only become active after restarting the web server or the whole device. **Value** String, max. 512 characters. **OID** 1.3.6.1.4.1.3181.10.6.3.63.8 (webLoginMessage)
options	Optional parameter may be defined here in a comma separated list. Rendering options defined here, will be applied to all gui_pages and gui_elements, unless overridden with options defined at element level. **Value** String, max. 512 characters. **OID** 1.3.6.1.4.1.3181.10.6.3.63.9 (webOptions)
restart_web_server	This command will restart the web server. Currently open web sessions will be lost. The connection to nmp will briefly be interrupted. Syntax: restart_web_server = CONFIRM. **Action** Excecute command with parameter string max. 16 characters. **OID** 1.3.6.1.4.1.3181.10.6.3.63.10 (webRestartWebServer)

Group	**gui_page**, dynamical size
Path	Management.WEB.gui_page
Description	Define the look and feel of the SmartOffice graphical user interface.
name	Unique name under which the page is reference a in the web gui. **Value** String, max. 32 characters. **OID** 1.3.6.1.4.1.3181.10.6.3.63.11.1.2 (guiPageName)
style_name	Enter a style name as defined in gui_style table. The style defines the colors of the page and its elements. **Value** String, max. 32 characters. **OID** 1.3.6.1.4.1.3181.10.6.3.63.11.1.3 (guiPageStyleName)

©2026 MICROSENS GmbH & Co. KG - Hamm/Germany - www.microsens.com

element_placement	Determines how the gui_elements are placed in the browser window. **Values** *CHAINED* Each gui_element is placed behind the each other. When line is full the next line below is selected. Default mode of operation. *ABSOLUTE* The position of a gui_element is determined by the margins relative to the container. Overlapping of elements may occur. **OID** 1.3.6.1.4.1.3181.10.6.3.63.11.1.4 (guiPageElementPlacement)
limited_to_users	When left blank, every user has access to the gui page and its associated elements. When one or more comma separated user names are defined, then local or remote access to the page and its elements is limited to the listed users. **Value** String, max. 128 characters. **OID** 1.3.6.1.4.1.3181.10.6.3.63.11.1.5 (guiPageLimitedToUsers)
options	Optional additional parameter may be defined here in a comma separated list. Rendering options defined here, will be applied to all elements placed on the page, unless overridden with options defined at element level. **Value** String, max. 512 characters. **OID** 1.3.6.1.4.1.3181.10.6.3.63.11.1.6 (guiPageOptions)

Group	**gui_element**, dynamical size
Path	Management.WEB.gui_element
Description	Defines a single element of the user interface gui. Defines position as well as content and function.
name	Unique name of the element. **Value** String, max. 32 characters. **OID** 1.3.6.1.4.1.3181.10.6.3.63.12.1.2 (guiElementName)

©2026 MICROSENS GmbH & Co. KG - Hamm/Germany - www.microsens.com

type	Predefined type of element. Choose to suit the functionality needed.		
	Values	*LABEL*	Static (fixed) text to display
		IMAGE	Used to place graphics from file
		HYPER_LINK	Button to click on to switch to another web page
		SPACE	Positioning tool
		LINE	Graphical element to draw lines
		FRAME	Graphical element to visually group elements that belong together logically
		BUTTON	One or several buttons to click on
		SELECT_BOX	Select box with predefined values
		SLIDER	Slider with predefined range
		RADIO_BUTTON	Radiobuttons with predefined values
		TOGGLE	Toggle button
		INPUT	Text input box which pops up a keypad
		CHECKBOX	Single or multiple check boxes
		TEXT_BOX	Text field which can hold information
		BAR_GRAPH	Bargraph to display an integer value
		GAUGE	Scaled gauge with pointer and range
		SYMBOL	Dynamic graphical status element
		DIAGRAM	Diagram as bar chart
		TABLE	Table element
		HEATMAP	Colored Heatmap and histogram. Defaults to 8x8 matrix
	OID	1.3.6.1.4.1.3181.10.6.3.63.12.1.3 (guiElementType)	
page	Name of gui page(s) on which this element is placed on. Use comma to specify several pages.		
	Value	String, max. 512 characters.	
	OID	1.3.6.1.4.1.3181.10.6.3.63.12.1.4 (guiElementPage)	
style_name	When undefined, the style of the parent element is inherited. Can be set to a style name as defined in gui_style table. The style defines the colors of the element.		
	Value	String, max. 32 characters.	
	OID	1.3.6.1.4.1.3181.10.6.3.63.12.1.5 (guiElementStyleName)	
visibility	Defines if an element is rendered on the gui.		
	Values	*NORMAL*	The element is shown
		HIDDEN	The element takes up screen space but is not visible
		DISABLED	The element is not drawn and takes no screen space
	OID	1.3.6.1.4.1.3181.10.6.3.63.12.1.6 (guiElementVisibility)	

©2026 MICROSENS GmbH & Co. KG - Hamm/Germany - www.microsens.com

auto_save	When enabled, this gui element saves the current setting as the default value to be used should the system restart. **Values** enabled, disabled **OID** 1.3.6.1.4.1.3181.10.6.3.63.12.1.7 (guiElementAutoSave)
remote_accessible	When enabled, this gui element may be accessed via the remote access interface. Use this parameter to restrict the remote interface to the required elements only. **Values** enabled, disabled **OID** 1.3.6.1.4.1.3181.10.6.3.63.12.1.8 (guiElementRemoteAccessible)
sensor_attribute	Indicates which type of sensor this gui element simulates when being operated. If left blank the element will register with its type as default. **Value** String, max. 32 characters. **OID** 1.3.6.1.4.1.3181.10.6.3.63.12.1.9 (guiElementSensorAttribute)
script_name	When this element is updated the script specified in this parameter is executed. If the parameter is left blank, the standard MS_SmartOfficeControl.ms script is executed. The specified script should not contain any time consuming functions. Syntax: app/file:sub par1 par2 Parameter are optional. When the app part is not supplied the file is expected in xml_cli_scripts folder. **Value** String, max. 63 characters. **OID** 1.3.6.1.4.1.3181.10.6.3.63.12.1.10 (guiElementScriptName)
watched_element	Here a valid CLI command may be entered to display any system parameter. Status or config values may be specified. Alternatively, the content of a persistent variable may be watched. Such variables can be maintained by microScript. Syntax: $varname. **Value** String, max. 512 characters. **OID** 1.3.6.1.4.1.3181.10.6.3.63.12.1.11 (guiElementWatchedElement)
order	Elements are displayed in this order. Elements with same index appear in the order they are configured. There may be gaps in the order of elements. **Value** Number in range 0-0xFFFFFFFF **OID** 1.3.6.1.4.1.3181.10.6.3.63.12.1.12 (guiElementOrder)
height	Height of element in percent of container height. To specify different values for horizontal and vertical display use hor/vert syntax like 10/20. **Value** String, max. 32 characters. **OID** 1.3.6.1.4.1.3181.10.6.3.63.12.1.13 (guiElementHeight)
width	Width of element in percent of container width. To specify different values for horizontal and vertical display use hor/vert syntax like 10/20. **Value** String, max. 32 characters. **OID** 1.3.6.1.4.1.3181.10.6.3.63.12.1.14 (guiElementWidth)

©2026 MICROSENS GmbH & Co. KG - Hamm/Germany - www.microsens.com

top_margin	Defines the distance of element in percent of container height below the above element. Can be used to position element in relation to others. To specify different values for horizontal and vertical display use hor/vert syntax like 16/24. **Value** String, max. 32 characters. **OID** 1.3.6.1.4.1.3181.10.6.3.63.12.1.15 (guiElementTopMargin)
left_margin	Defines the distance of element in percent of container width from the end of the previous element to the left. Can be used to position element in relation to others. To specify different values for horizontal and vertical display use hor/vert syntax like 5/2. **Value** String, max. 32 characters. **OID** 1.3.6.1.4.1.3181.10.6.3.63.12.1.16 (guiElementLeftMargin)
header	Optional title to be displayed above the element. May be left empty. **Value** String, max. 64 characters. **OID** 1.3.6.1.4.1.3181.10.6.3.63.12.1.17 (guiElementHeader)
text	Comma separated list of texts. Appearance depends on the type of element. **Value** String, max. 512 characters. **OID** 1.3.6.1.4.1.3181.10.6.3.63.12.1.18 (guiElementText)
value	Comma separated list of values. Usage depends on the type of element. **Value** String, max. 512 characters. **OID** 1.3.6.1.4.1.3181.10.6.3.63.12.1.19 (guiElementValue)
start_value	Default or start value which is used when the element is first created. This value is automatically updated to reflect the last setting when the auto_save parameter is enabled. This value only applies to active elements. **Value** String, max. 160 characters. **OID** 1.3.6.1.4.1.3181.10.6.3.63.12.1.20 (guiElementStartValue)
image	Comma separated list of images to display on the element. **Value** String, max. 512 characters. **OID** 1.3.6.1.4.1.3181.10.6.3.63.12.1.21 (guiElementImage)
options	Optional element specific additional parameter may be placed here. **Value** String, max. 512 characters. **OID** 1.3.6.1.4.1.3181.10.6.3.63.12.1.22 (guiElementOptions)

©2026 MICROSENS GmbH & Co. KG - Hamm/Germany - www.microsens.com

Group	**gui_style**, dynamical size
Path	Management.WEB.gui_style
Description	Define the colors of the SmartOffice graphical user interface.

name	Unique name under which the page is reference a in the web gui.	
	Value	String, max. 32 characters.
	OID	1.3.6.1.4.1.3181.10.6.3.63.13.1.2 (guiStyleName)
background_color	Canvas background color. Three valid formats permitted: red, #ff0000, rgb(255,0,0). Order of preference stongest first: local element.option, element.style_name, page.style_name, browser_default. Optionally, transparency is supported with a 4th value in rgb or # syntax. A color gradient can be specified by using two semicolon separated color values.	
	Value	String, max. 24 characters.
	OID	1.3.6.1.4.1.3181.10.6.3.63.13.1.3 (guiStyleBackgroundColor)
box_passive_color	Color of passive element. For details see background_color help.	
	Value	String, max. 24 characters.
	OID	1.3.6.1.4.1.3181.10.6.3.63.13.1.4 (guiStyleBoxPassiveColor)
box_active_color	Color of active (editable) element. For details see background_color help.	
	Value	String, max. 24 characters.
	OID	1.3.6.1.4.1.3181.10.6.3.63.13.1.5 (guiStyleBoxActiveColor)
selected_color	Color of selected element. For details see background_color help.	
	Value	String, max. 24 characters.
	OID	1.3.6.1.4.1.3181.10.6.3.63.13.1.6 (guiStyleSelectedColor)
unselected_color	Color of unselected element. For details see background_color help.	
	Value	String, max. 24 characters.
	OID	1.3.6.1.4.1.3181.10.6.3.63.13.1.7 (guiStyleUnselectedColor)
selected_text_color	Text color of selected option of an element. For details see background_color help.	
	Value	String, max. 24 characters.
	OID	1.3.6.1.4.1.3181.10.6.3.63.13.1.8 (guiStyleSelectedTextColor)

©2026 MICROSENS GmbH & Co. KG - Hamm/Germany - www.microsens.com

unselected_text_color	Text color of not selected option of an element. For details see background_color help. **Value** String, max. 24 characters. **OID** 1.3.6.1.4.1.3181.10.6.3.63.13.1.9 (guiStyleUnselectedTextColor)
content_text_color	Color of variable text of an element. For details see background_color help. **Value** String, max. 24 characters. **OID** 1.3.6.1.4.1.3181.10.6.3.63.13.1.10 (guiStyleContentTextColor)
header_text_color	Color of fixed element label or header. For details see background_color help. **Value** String, max. 24 characters. **OID** 1.3.6.1.4.1.3181.10.6.3.63.13.1.11 (guiStyleHeaderTextColor)
accent_color	Color of possible element accent. For details see background_color help. **Value** String, max. 24 characters. **OID** 1.3.6.1.4.1.3181.10.6.3.63.13.1.12 (guiStyleAccentColor)
gradient	A gradient will render the top of the element brighter and gradually become darker towards the bottom. Use a value from 2 to 255 to make elements appear more three dimensional. An optional angle value can be used for sideway graduation. Syntax: 30;90 (note the semicolon!) **Value** String, max. 16 characters. **OID** 1.3.6.1.4.1.3181.10.6.3.63.13.1.13 (guiStyleGradient)
shadow	Width of element shadow. 0 to turn off shadows. **Value** String, max. 16 characters. **OID** 1.3.6.1.4.1.3181.10.6.3.63.13.1.14 (guiStyleShadow)
radius	Radius of box to create rounded elements. The value is defined as % of window size. Also float values like 1.5 are permitted. **Value** String, max. 16 characters. **OID** 1.3.6.1.4.1.3181.10.6.3.63.13.1.15 (guiStyleRadius)
background_image	A page background image may be specified. The image is stretched to fit the page dimensions. A horizontal and vertical image may be specified using \ as delimiter: hor.jpg\vert.jpg **Value** String, max. 32 characters. **OID** 1.3.6.1.4.1.3181.10.6.3.63.13.1.16 (guiStyleBackgroundImage)

©2026 MICROSENS GmbH & Co. KG - Hamm/Germany - www.microsens.com

font	Optional a font may be specified that is used by all elements on the page. Note that the font must be installed on the displaying device. **Value** String, max. 32 characters. **OID** 1.3.6.1.4.1.3181.10.6.3.63.13.1.17 (guiStyleFont)

©2026 MICROSENS GmbH & Co. KG - Hamm/Germany - www.microsens.com

6 Simple Network Management Protocol (SNMP)

6.1 Key Features

SNMP V1/V2c

Simple Network Management Protocol v1, v2c (SNMPv1, v2c) to access device information stored in Management Information Base (MIB). Security provided by community strings for Set/Get commands.

Provide universal access to all parameter using standards based interface.

SNMP V1/2c Security

SNMP v1/v2c does not provide any access protection other than an easily scanned community string. The device offers additional protection though the possibility to map SNMP requests to a certain user. Each request inherits the access rights of this user and these are applied these prior to execution. Please refer to Access section. Additionally, it is possible to generally block all SET commands.

This unique feature combines the ease of SNMP V1/V2c with the view model protection of SNMP V3 without the burden SNMP V3 carries along.

SNMP V3

Simple Network Management Protocol v3 (SNMPv3) for secure access to device information stored in Management Information Base (MIB). SNMPv3 supports data encryption, User-based Security Model (USM) and View-based Access Control Model (VACM).

Full implementation of SNMP V3 allows secure and standards based interoperability with third party management systems.

SNMP TSM

Support of Transport Security Model TSM for SNMP v3. This includes agent und user certificates . SNMP traffic is tunnelled via SSH.

Highest security options for SNMP permit use of SNMP in mission critical networks.

Traps (SNMP V1/V2c/V3)

Traps, Notifications or Informs can be sent to an unlimited number of independently configurable receiver destinations. Sending of message is triggered by internal device status change events. Informs provide secured messaging by requiring response message. Event triggers can be configured individually per destination. Test function to trigger Trap/Notification for simplified configuration check

Highly configurable event and trap system adapts to any networking environment.

Private Traps

In addition or alternatively, private traps may be generated. Any internal event that causes a syslog may also be presented as SNMP trap. This includes configuration changes or user log-in for example. There are about 80 private event types.

Private traps offer more detail and insight into the device than the limited standard traps would allow.

©2026 MICROSENS GmbH & Co. KG - Hamm/Germany - www.microsens.com

Private and Public MIBs

The device supports private MIBS that cover every aspect of the device. Additionally numerous standard MIBs are supported. Please refer to separate documentation. Private MIB File can be downloaded from the integrated Web Manager.

Private MIBS allow access to any device parameter even if not usually included in standard MIBs. Standard MIB support ensures integration in tool chains that work across a number of different vendors.

ARP-Guard Compliance

Compliant with ARP-Guard (ISL GmbH) network control software which may be used for additional network security. Requires precise implementation of all BRIDGE-MIB features and other SNMP details.

Ensures seamless network integration.

MACMON Compliance

Compliant with MACMON (MIKADO AG) network control software which may be used for additional network security. Requires precise implementation of all BRIDGE-MIB features and other SNMP details.

Ensures seamless network integration.

Integrated SNMP Browser

SNMP commandline browser supports GET, GETNEXT, SET and WALK with all protocol levels v1/v2c/v3. Understands G6 private MIBs and some basic general purpose MIBs for easy textual retrieval.

Permits monitoring of foreign devices. The browser can be used inside microScripts to perform local actions depending on the state of anohter machine. May also be used to configure a foreign machine.

6.2 Functional Description

The Simple Network Management Protocol (SNMP) is an application-layer protocol for the exchange of management information between network devices. It is part of the TCP/IP protocol suite. SNMP enables network administrators to manage network performance, find and solve network problems, and plan for network growth.

6.2.1 SNMP key components

SNMP consists of following key components:

- Managed device is a network node that contains SNMP agent. Managed devices collect and store management information and make this information available to NMS using SNMP. Managed device can be switches/Hub, etc.
- MIB (Management Information Base) define the complete manageable entries of the managed device. These MIB entries can be either read-only or read-write. For example, the 'System Version' is a read-only variable. The 'Port State Enable' or 'Disable' is a read-write variable and a network administrator can not only read but also set its value remotely.
- SNMP Agent is a management module resides in the managed device that responds to the SNMP Manager request. SNMP Manager/NMS executes applications that monitor and control managed devices. NMS provide the bulk of the processing and memory resources required for the complete network management. SNMP Manager often composed by desktop computer/work station and software program such like HP OpenView.

©2026 MICROSENS GmbH & Co. KG - Hamm/Germany - www.microsens.com

6.2.2 SNMP Operations

Totally 4 types of operations are used between SNMP Agent and Manager to change the MIB information. These 4 operations all use the UDP/IP protocol to exchange packets.

- GET: This command is used by an SNMP Manager to monitor managed devices. The SNMP Manager examines different variables that are maintained by managed devices.
- GET Next: This command provides traversal operation and is used by the SNMP Manager to sequentially gather information in variable tables, such as a routing table.
- SET: This command is used by an SNMP Manager to control managed devices. The NMS changes the values of variables stored within managed devices.
- Trap: Trap is used by the managed device to report asynchronously a specified event to the SNMP Manager. When certain types of events occur, a managed device will send a trap to alert the SNMP Manager.

6.2.3 SNMP Versions

The Simple Network Management protocol can be implemented in 3 different versions, SNMPv1, v2c and SNMPv3.

SNMPv1 and v2c implement only rudimentary security mechanism and transmit information unencrypted, whereas SNMPv3 implements an user based access model and transmits all information encrypted.

For maximum security, SNMPv1 and SNMPv2c access can be disabled when SNMPv3 is used.

6.2.4 SNMP Notifications (Traps and Informs)

System events can trigger the sending of SNMP notifications to an external receiver. These notifications can be one-way only (Traps) or acknowledged (Informs). Please see section 'Event Messages' of this document for further reference.

6.2.5 SNMP MIB File

Before using the SNMP based network management system, normally the MIB file must be installed to be able to decode the device parameters. The MIB file (Management Information Base) defines all parameters (OIDs) that can be accessed via SNMP protocol.

Besides the standard MIBs defined in RFCs, all device specific funtions can be accessed via an enterprise-specific private MIB.

The private MIB files can be downloaded from the integrated Web-Manager in the 'Documents' section. There is one separate MIB file for each feature section and one global MIB file. The file name extension is .mib, which SNMP based compiler can import.

Please refer to the appropriate documentation for the instructions of installing the system private MIB on your network management software.

6.2.6 SNMP System Information

To simplify the identification and administration of installed devices, individual information fields can be set by the user. This includes the standard information *description*, *location* and *contact* plus an additional field for device group information (for structuring networks into functional groups) and an inventory string which can be used for entering an individual identification number used for automatic inventory retrieval.

©2026 MICROSENS GmbH & Co. KG - Hamm/Germany - www.microsens.com

6.3 SNMP CLI Command Reference

The following table lists all CLI commands applicable for this feature section. For each parameter, the access mode is given:

R = Read Only, R/W = Read/Write, X = Executable Action.

Please note that the effective access rights are dependent on the login level of the user.

Category	Group	Table	Parameter	Options	Access	Description
Management.						
	snmp.					Simple Network Mangement Protocol (SNMP) server setup
		device_info.				SNMP version MIB-2 variables
			sys_description		R	Device description. This value is SNMP accessible as sysDescr.
			sys_name		R/W	Device name as assigned by customer. This value is SNMP accessible as sysName.
			sys_location		R/W	Location of this device as assigned by customer. This value is SNMP accessible as sysLocation.
			sys_group		R/W	Customer defined group definition. Note: This field does not have a MIB-2 counterpart.
			sys_contact		R/W	Contact person for this device as required by customer. This value is SNMP accessible as sysContact.
			sys_object_id		R	Response to SNMP sysObject request.
		v1v2_config.				SNMP version V1 / V2 variables
			enable_snmp_v1		R/W	Only when enabled will SNMP V1 requests be responded to. May be disabled when only secure SNMP V3 access is allowed.
			enable_snmp_v2c		R/W	Only when enabled will SNMP V2C requests be responded to. May be disabled when only secure SNMP V3 access is allowed.
			get_community		R/W	Community string to enable V1/V2c get commands.
			set_community		R/W	Community string to enable V1/V2c set commands.

©2026 MICROSENS GmbH & Co. KG - Hamm/Germany - www.microsens.com

	snmp_v1v2_username	R/W	SNMP v1/v2 normally only provides light security by means of the community strings. Additional V3 like security can be applied by setting this field to any user.name defined in the access section. The access restrictions defined for the selected user also apply to the SNMP V1/v2 access when the user name is specified here. When no username or an invalid user name is configured, SNMP access is blocked.
	permit_v1v2_set_commands	R/W	When disabled SNMP sets (writes) are declined and no modifications to the system via unsecure SNMP V1/V2 can occur.
v3_config.			SNMP version V3 variables
	enable_snmp_v3	R/W	Only when enabled will SNMP V3 requests be responded to. To limit access to SNMP V3 only, disable SNMP V1 and V2 access in the configuration.
	security_model	R/W	Selects if user based or view based security model is used.
	snmp_engine_id	R/W	Administratively assigned part of the computed engine id. Here the used MAC address can be used to ensure a unique value.
	trap_engine_id	R/W	This engine id is used for outgoing SNMP v3 traps. The value is treated as hexadecimal characters. The associated trap receiver must match this sequence or may be setup to ignore the engine id altogether. Default value defines 80000c6d which represents the our IANA value in hex followed by 03 indicating that a MAC is following. The remaining 12 character represent the MAC address of this device.
browser.			SNMP browser actions
	get	X	Invokes SNMP GET command at other device. Easiest syntax: ..get hostname OID. Type = (nothing) for basic help and = ? for extensive help.
	next	X	Invokes SNMP GETNEXT command at other device. It will display the next OID following the given one. Syntax: ..get -v 2c -c community hostname OID. Hostname can be symbolic or IP address.

©2026 MICROSENS GmbH & Co. KG - Hamm/Germany - www.microsens.com

	set	X	Invokes SNMP SET command at other device. Easiest syntax: ..set hostname OID type value. Check examples shown with = (enter).
	walk	X	Invokes SNMP MIBWALK command at other device. Basic syntax: = IP_address. To see MIB-II system group type = IP system. WARNING: an unlimited MIB walk may take a long time. Even when the output is cancelled, the walk will continue to the end. During this time other action commands may not operate!
	engine_boots	R	Number of reboots of SNMP engine since system reboot.
	engine_runtime	R	Runtime of SNMP engine in seconds.

©2026 MICROSENS GmbH & Co. KG - Hamm/Germany - www.microsens.com

6.4 SNMP Configuration Parameters

Group	**device_info**
Path	Management.SNMP.device_info
Description	SNMP version MIB-2 variables

sys_description	Device description. This value is SNMP accessible as sysDescr.	
	Value	String, max. 255 characters.
	OID	1.3.6.1.4.1.3181.10.6.3.65.1.1.2 (deviceInfoSysDescription) 1.3.6.1.2.1.1.1 (sysDescr) 1.0.8802.1.1.2.1.3.4 (lldpLocSysDesc)
sys_name	Device name as assigned by customer. This value is SNMP accessible as sysName.	
	Value	String, max. 255 characters.
	OID	1.3.6.1.4.1.3181.10.6.3.65.1.1.3 (deviceInfoSysName) 1.3.6.1.2.1.1.5 (sysName) 1.0.8802.1.1.2.1.3.3 (lldpLocSysName)
sys_location	Location of this device as assigned by customer. This value is SNMP accessible as sysLocation.	
	Value	String, max. 255 characters.
	OID	1.3.6.1.4.1.3181.10.6.3.65.1.1.4 (deviceInfoSysLocation) 1.3.6.1.2.1.1.6 (sysLocation)
sys_group	Customer defined group definition. Note: This field does not have a MIB-2 counterpart.	
	Value	String, max. 255 characters.
	OID	1.3.6.1.4.1.3181.10.6.3.65.1.1.5 (deviceInfoSysGroup)
sys_contact	Contact person for this device as required by customer. This value is SNMP accessible as sysContact.	
	Value	String, max. 255 characters.
	OID	1.3.6.1.4.1.3181.10.6.3.65.1.1.6 (deviceInfoSysContact) 1.3.6.1.2.1.1.4 (sysContact)
sys_object_id	Response to SNMP sysObject request.	
	Value	String, max. 24 characters.
	OID	1.3.6.1.4.1.3181.10.6.3.65.1.1.7 (deviceInfoSysObjectId) 1.3.6.1.2.1.1.2 (sysObjectID)

©2026 MICROSENS GmbH & Co. KG - Hamm/Germany - www.microsens.com

Group	**v1v2_config**
Path	Management.SNMP.v1v2_config
Description	SNMP version V1 / V2 variables

enable_snmp_v1	Only when enabled will SNMP V1 requests be responded to. May be disabled when only secure SNMP V3 access is allowed. **Values** enabled, disabled **OID** 1.3.6.1.4.1.3181.10.6.3.65.2.1.2 (v1v2ConfigEnableSnmpV1)
enable_snmp_v2c	Only when enabled will SNMP V2C requests be responded to. May be disabled when only secure SNMP V3 access is allowed. **Values** enabled, disabled **OID** 1.3.6.1.4.1.3181.10.6.3.65.2.1.3 (v1v2ConfigEnableSnmpV2c)
get_community	Community string to enable V1/V2c get commands. **Value** String, max. 32 characters. **OID** 1.3.6.1.4.1.3181.10.6.3.65.2.1.4 (v1v2ConfigGetCommunity)
set_community	Community string to enable V1/V2c set commands. **Value** String, max. 32 characters. **OID** 1.3.6.1.4.1.3181.10.6.3.65.2.1.5 (v1v2ConfigSetCommunity)
snmp_v1v2_username	SNMP v1/v2 normally only provides light security by means of the community strings. Additional V3 like security can be applied by setting this field to any user.name defined in the access section. The access restrictions defined for the selected user also apply to the SNMP V1/v2 access when the user name is specified here. When no username or an invalid user name is configured, SNMP access is blocked. **Value** String, max. 32 characters. **OID** 1.3.6.1.4.1.3181.10.6.3.65.2.1.6 (v1v2ConfigSnmpV1v2Username)
permit_v1v2_set_commands	When disabled SNMP sets (writes) are declined and no modifications to the system via unsecure SNMP V1/V2 can occur. **Values** enabled, disabled **OID** 1.3.6.1.4.1.3181.10.6.3.65.2.1.7 (v1v2ConfigPermitV1v2SetCommands)

©2026 MICROSENS GmbH & Co. KG - Hamm/Germany - www.microsens.com

Group	**v3_config**
Path	Management.SNMP.v3_config
Description	SNMP version V3 variables

enable_snmp_v3

Only when enabled will SNMP V3 requests be responded to. To limit access to SNMP V3 only, disable SNMP V1 and V2 access in the configuration.

Values	enabled, disabled
OID	1.3.6.1.4.1.3181.10.6.3.65.3.1.2 (v3ConfigEnableSnmpV3)

security_model

Selects if user based or view based security model is used.

Values	*USM*	User-based Security Model.
	VACM	View-based Access Control Model.
	TSM	Transport Security Model.
OID	1.3.6.1.4.1.3181.10.6.3.65.3.1.3 (v3ConfigSecurityModel)	

snmp_engine_id

Administratively assigned part of the computed engine id. Here the used MAC address can be used to ensure a unique value.

Value	String, max. 32 characters.
OID	1.3.6.1.4.1.3181.10.6.3.65.3.1.4 (v3ConfigSnmpEngineId)

trap_engine_id

This engine id is used for outgoing SNMP v3 traps. The value is treated as hexadecimal characters. The associated trap receiver must match this sequence or may be setup to ignore the engine id altogether. Default value defines 80000c6d which represents the our IANA value in hex followed by 03 indicating that a MAC is following. The remaining 12 character represent the MAC address of this device.

Value	String, max. 66 characters.
OID	1.3.6.1.4.1.3181.10.6.3.65.3.1.5 (v3ConfigTrapEngineId)

Group	**browser**
Path	Management.SNMP.browser
Description	SNMP browser actions

get

Invokes SNMP GET command at other device. Easiest syntax: ..get hostname OID. Type = (nothing) for basic help and = ? for extensive help.

Action	Excecute command with parameter string max. 128 characters.
OID	1.3.6.1.4.1.3181.10.6.3.65.4.1.2 (browserGet)

©2026 MICROSENS GmbH & Co. KG - Hamm/Germany - www.microsens.com

next	Invokes SNMP GETNEXT command at other device. It will display the next OID following the given one. Syntax: ..get -v 2c -c community hostname OID. Hostname can be symbolic or IP address.	
	Action	Excecute command with parameter string max. 128 characters.
	OID	1.3.6.1.4.1.3181.10.6.3.65.4.1.3 (browserNext)
set	Invokes SNMP SET command at other device. Easiest syntax: ..set hostname OID type value. Check examples shown with = (enter).	
	Action	Excecute command with parameter string max. 128 characters.
	OID	1.3.6.1.4.1.3181.10.6.3.65.4.1.4 (browserSet)
walk	Invokes SNMP MIBWALK command at other device. Basic syntax: = IP_address. To see MIB-II system group type = IP system. WARNING: an unlimited MIB walk may take a long time. Even when the output is cancelled, the walk will continue to the end. During this time other action commands may not operate!	
	Action	Excecute command with parameter string max. 128 characters.
	OID	1.3.6.1.4.1.3181.10.6.3.65.4.1.5 (browserWalk)

©2026 MICROSENS GmbH & Co. KG - Hamm/Germany - www.microsens.com

6.5 SNMP Status Parameters

Group **Path**	**General Parameters** Management.SNMP
engine_boots	Number of reboots of SNMP engine since system reboot. **Value** Number in range 0-0xFFFFFFFF **OID** 1.3.6.1.4.1.3181.10.6.3.65.100 (snmpEngineBoots)
engine_runtime	Runtime of SNMP engine in seconds. **Value** Number in range 0-0xFFFFFFFF **OID** 1.3.6.1.4.1.3181.10.6.3.65.101 (snmpEngineRuntime)

©2026 MICROSENS GmbH & Co. KG - Hamm/Germany - www.microsens.com

7 RADIUS Servers

7.1 Key Features

Access

RADIUS client via UDP/IP ports 1812 (access) for Remote Authentication Dial In User Service (RADIUS) server for authorizing user access.

Use of RADIUS permits access to network wide login policies which eases user management in large companies.

Accounting

RADIUS client via UDP/IP port 1813 (accounting) for Remote Authentication Dial In User Service (RADIUS) server for logging of user accounting information.

Centralized RADIUS server can log user access information.

Redundancy

In case of a response timeout, a secondary RADIUS server can be requested. Up to 8 RADIUS server for use in different applications may be specified.

Multiple RADIUS server may be specified to ensure continued service.

Tunnel Attributes

When port-based network access control and VLANs are enabled additional RADIUS attributes can be added to the RADIUS ACCESS-REQUEST frames.

This allows for a port to be placed into a particular VLAN, based on the result of the authentication.

7.2 Functional Description

When Port-based Access Control is enabled, user login is controlled by a central RADIUS server (Remote Authentication Dial-In User Service). Multiple RADIUS servers can be defined for redundancy. If a server fails to respond to a request, the next active server is requested.

ATTENTION: ***If you have a single RADIUS Server for both authentication and accounting, make sure that is present twice in the device's database with the correct port number for each type of service and that you assign the proper server to the port access control parameters referencing it.***

7.2.1 RADIUS Authentication

The user or machine connected to a switch port is requested to send its access credentials, typically in the form of username and password or security certificate. This information is send by the switch to a central RADIUS server.

The RADIUS server verifies that the information is correct against a user database and then returns a response:

©2026 MICROSENS GmbH & Co. KG - Hamm/Germany - www.microsens.com

Access Reject

The user is denied access to the network. Reasons may be failure of identification or an unknown or inactive user account.

Access Accept

The user is granted access to the network.

Attributes in the Access-Accept RADIUS packet

The switch supports several attributes in the Access-Accept RADIUS packet.

To set a VLAN for a specific user authorized on a certain switch port via PACC, the following attributes are required:

Tunnel-Type = VLAN(13),

Tunnel-Medium-Type = 802(6)

Tunnel-Private-Group-Id = (VLAN ID #) OR (name of locally configured VLAN)

> ***INFO:*** *The Tunnel-Type attribute indicates the tunneling protocol(s) to be used and must always be VLAN(13).*

> ***INFO:*** *The Tunnel-Medium-Type attribute indicates which transport medium to use and must always be 802(6).*

> ***INFO:*** *The Tunnel-Private-Group-Id attribute indicates the VLAN ID for this authorization response.*

To assign privilidges to a RADIUS authorized user on any management interface, the RADIUS Server must provide the Filter-ID attribute defined in RFC2865 with a locally known user as paramter. Example:

Filter-Id(11) = admin

The default users of "admin" and "user" allow for full access and read-only access.

©2026 MICROSENS GmbH & Co. KG - Hamm/Germany - www.microsens.com

7.3 RADIUS CLI Command Reference

The following table lists all CLI commands applicable for this feature section. For each parameter, the access mode is given:

R = Read Only, R/W = Read/Write, X = Executable Action.

Please note that the effective access rights are dependent on the login level of the user.

Category	Group	Table	Parameter	Options	Access	Description
Management.						
	radius.					RADIUS server definitions
		server[DYNAMIC].				This dynamic table is used to specify access parameter to authentication servers using RADIUS or TACACS+.
			name		R/W	Unique name used to identify the server. Used for reference in Port-based Access Control configuration.
			server_type		R/W	Flags if RADIUS or TACACS+ is specified in this entry.
			host_address		R/W	IP address or symbolic name of the authentication server. IPv4 or IPv6 with lower case letter is acceptable
			udp_port		R/W	UDP port for RADIUS authentication service. Standard port is 1812. For TACACS+ this specifies the TCP port which defaults to 49.
			shared_secret		R/W	Shared Secret as common password between authenticator and server. THIS FIELD IS DEPRECATED. Provided for backward compatibility. Use the secure enter_shared_secret command instead.
			enter_shared_secret		X	Set a shared secret as common password between authenticator and server. The input is encrypted and saved as encypted_shared_secret. No spaces are permitted.
			encrypted_shared_secret		R/W	This holds the encrypted shared secret. When empty the legacy unencrypted shared secret is used instead.
			interim_interval		R/W	If an accountant server is used, this value defines the interval between accounting updates. Set to 0 to disable this function.

7.4 RADIUS Configuration Parameters

Group	**server**, dynamical size
Path	Management.RADIUS.server
Description	This dynamic table is used to specify access parameter to authentication servers using RADIUS or TACACS+.

name

Unique name used to identify the server. Used for reference in Port-based Access Control configuration.

Value String, max. 32 characters.

OID 1.3.6.1.4.1.3181.10.6.3.69.1.1.2 (serverName)
1.3.6.1.2.1.67.1.1.1.1.1.0 (radiusAuthServIdent)

server_type

Flags if RADIUS or TACACS+ is specified in this entry.

Values

RADIUS	This is a RADIUS server entry
TACACS	This is a TACACS+ server entry

OID 1.3.6.1.4.1.3181.10.6.3.69.1.1.3 (serverServerType)

host_address

IP address or symbolic name of the authentication server. IPv4 or IPv6 with lower case letter is acceptable

Value String, max. 128 characters.

OID 1.3.6.1.4.1.3181.10.6.3.69.1.1.4 (serverHostAddress)
1.3.6.1.2.1.67.1.2.1.1.3.1.2 (radiusAuthServerAddress)

udp_port

UDP port for RADIUS authentication service. Standard port is 1812. For TACACS+ this specifies the TCP port which defaults to 49.

Value Number in range 0-65535

OID 1.3.6.1.4.1.3181.10.6.3.69.1.1.5 (serverUdpPort)
1.3.6.1.2.1.67.1.2.1.1.3.1.3 (radiusAuthClientServerPortNumber)

shared_secret

Shared Secret as common password between authenticator and server. THIS FIELD IS DEPRECATED. Provided for backward compatibility. Use the secure enter_shared_secret command instead.

Value String, max. 256 characters.

OID 1.3.6.1.4.1.3181.10.6.3.69.1.1.6 (serverSharedSecret)
1.3.6.1.2.1.67.2.1.1.1.14.1 (radiusAccClientEntry)

©2026 MICROSENS GmbH & Co. KG - Hamm/Germany - www.microsens.com

enter_shared_secret	Set a shared secret as common password between authenticator and server. The input is encrypted and saved as encypted_shared_secret. No spaces are permitted. **Action** Excecute command with parameter string max. 256 characters. **OID** 1.3.6.1.4.1.3181.10.6.3.69.1.1.7 (serverEnterSharedSecret)
encrypted_shared_secret	This holds the encrypted shared secret. When empty the legacy unencrypted shared secret is used instead. **Value** String, max. 256 characters. **OID** 1.3.6.1.4.1.3181.10.6.3.69.1.1.8 (serverEncryptedSharedSecret)
interim_interval	If an accountant server is used, this value defines the interval between accounting updates. Set to 0 to disable this function. **Value** Number in range 0-0xFFFFFFFF **OID** 1.3.6.1.4.1.3181.10.6.3.69.1.1.9 (serverInterimInterval)

©2026 MICROSENS GmbH & Co. KG - Hamm/Germany - www.microsens.com

8 Network Time Protocol (NTP)

8.1 Key Features

NTP Client

Network time is automatically retrieved from NTP server. Two NTP server may be specified. The clock mal also manually be set if NTP access is not desired.

Time handling is automatic provided network access is granted.

NTP Server

This may be used in an island network where other devices cannot reach outside. The quality of the local ntp server depends on how the local time is sourced and maintained.

Local server may be used in an island network where other devices cannot reach outside.

8.2 Functional Description

Internal Real Time Clock

The management agent includes a precision real time clock that can be automatically synchronized with external time servers.

If no time server is available, the real time clock can also be manually set via System group parameters.

External Time Server Synchonization

The device internal real time clock can be synchronized with external time servers using NTP (Network Time Protocol). When enabled, the system requests at boot time the configured NTP time server and sets the internal real time clock parameters for time and date accordingly.

If the configured main NTP server does not answer, after a timeout period an alternative backup NTP server is requested.

If this also fails, the internal real time clock remains unchanged and should be adjusted manually.

For a permanent resynchronization, a time intervall can be defined in which the NTP server is requested.

Localisation

As an external time server does not know where the requesting device is located, it always provides the UTC time (Universal Time Coordinated). For the correct local time value, the local time zone must be configured. Daylight saving is automatically derived from the time zone and date information and applied to the local time.

©2026 MICROSENS GmbH & Co. KG - Hamm/Germany - www.microsens.com

8.3 NTP CLI Command Reference

The following table lists all CLI commands applicable for this feature section. For each parameter, the access mode is given:

R = Read Only, R/W = Read/Write, X = Executable Action.

Please note that the effective access rights are dependent on the login level of the user.

Category	Group	Table	Parameter	Options	Access	Description
Management.						
	ntp.					Network Time Protocol (NTP)
			enable_ntp		R/W	When enabled the local clock will be synchronized with the time provided by a time server.
			sync_now		X	Action command to read time server now and setup the internal clock.
			dhcp_provides_ntp_server		R/W	Enable DHCP to automatically retrieve NTP server address(es). When disabled, the locally defined addresses are used instead.
			main_ntp_server		R/W	This is the preferred NTP server address. IP address or symbolic name may be used. IPv4 or IPv6 (with lower case letters) is acceptable.
			backup_ntp_server		R/W	This defines an optional alternate NTP server address. IP address or symbolic name may be used. IPv4 or IPv6 (with lower case letters) is acceptable.
			trusted_server		R/W	Some NTP server (Windows) indicate a too large deviation or indicate they are unreliable when they are not externally synchronized. To be able to still use such a server set this option to true.
			local_server		R/W	When enabled a local NTP server is started that provides the time for other devices. This may be used in an island network where other devices cannot reach outside. The quality of the local ntp server depends on how the local time is sourced and maintained.
			sync_interval		R/W	Resynchronization interval (minutes), default once per day.
			show_time_date		X	Show system time and date.
			list_time_zones		X	Displays a long list of available time zones. Pick the time zone that matches your location and use this name for the time_zone parameter.

©2026 MICROSENS GmbH & Co. KG - Hamm/Germany - www.microsens.com

	time_zone	R/W	Enter a string exactly as obtained via list_time_zones command. Note that a change of the time zone if only effective after a system reboot. Important: Linux defines zones west of GMT as + and east as -. This is reverse from common understanding but cannot be changed.
	time_format	R/W	This parameter permits definition of the time format displayed under ntp.local_time. When left blank the default format hrs:min:sec is used. The parameter follows the Linux date command syntax. Please refer to external documentation for details. Use %k:%M for time without seconds. Use %P to add AM/ PM where is applies. There are more options.
	date_format	R/W	This parameter permits definition of the data format displayed under ntp.local_date. When left blank the default format year-month-date is used. The parameter follows the Linux date command syntax. Please refer to external documentation for details. It is also possible to add weekday %A or month %B or week of year %V, etc.
	status	R	Indicates by which means the clock was last set.
	local_time	R	Displays the current local date according to selected time zone in the format defined user ntp.time_format.
	local_date	R	Displays the current local date according to selected time zone in the format defined user ntp.date_format.
	used_ntp_server	R	Actually used NTP server IP address or name
	dynamic_ntp_server_1	R	Main dynamically assigned NTP server IP address.
	dynamic_ntp_server_2	R	Alternate dynamically assigned NTP server IP address.
	dynamic_ntp_server_3	R	Alternate dynamically assigned NTP server IP address.
	dynamic_ntp_server_4	R	Alternate dynamically assigned NTP server IP address.

©2026 MICROSENS GmbH & Co. KG - Hamm/Germany - www.microsens.com

8.4 NTP Configuration Parameters

Group **Path**	**General Parameters** Management.NTP
enable_ntp	When enabled the local clock will be synchronized with the time provided by a time server. **Values** enabled, disabled **OID** 1.3.6.1.4.1.3181.10.6.3.73.1 (ntpEnableNtp)
sync_now	Action command to read time server now and setup the internal clock. **Action** Excecute command. **OID** 1.3.6.1.4.1.3181.10.6.3.73.2 (ntpSyncNow)
dhcp_provides_ntp_server	Enable DHCP to automatically retrieve NTP server address(es). When disabled, the locally defined addresses are used instead. **Values** enabled, disabled **OID** 1.3.6.1.4.1.3181.10.6.3.73.3 (ntpDhcpProvidesNtpServer)
main_ntp_server	This is the preferred NTP server address. IP address or symbolic name may be used. IPv4 or IPv6 (with lower case letters) is acceptable. **Value** String, max. 128 characters. **OID** 1.3.6.1.4.1.3181.10.6.3.73.4 (ntpMainNtpServer)
backup_ntp_server	This defines an optional alternate NTP server address. IP address or symbolic name may be used. IPv4 or IPv6 (with lower case letters) is acceptable. **Value** String, max. 128 characters. **OID** 1.3.6.1.4.1.3181.10.6.3.73.5 (ntpBackupNtpServer)
trusted_server	Some NTP server (Windows) indicate a too large deviation or indicate they are unreliable when they are not externally synchronized. To be able to still use such a server set this option to true. **Values** enabled, disabled **OID** 1.3.6.1.4.1.3181.10.6.3.73.6 (ntpTrustedServer)
local_server	When enabled a local NTP server is started that provides the time for other devices. This may be used in an island network where other devices cannot reach outside. The quality of the local ntp server depends on how the local time is sourced and maintained. **Values** enabled, disabled **OID** 1.3.6.1.4.1.3181.10.6.3.73.7 (ntpLocalServer)

©2026 MICROSENS GmbH & Co. KG - Hamm/Germany - www.microsens.com

sync_interval	Resynchronization interval (minutes), default once per day.	
	Value	Number in range 0-65535
	OID	1.3.6.1.4.1.3181.10.6.3.73.8 (ntpSyncInterval)
show_time_date	Show system time and date.	
	Action	Excecute command.
	OID	1.3.6.1.4.1.3181.10.6.3.73.9 (ntpShowTimeDate)
list_time_zones	Displays a long list of available time zones. Pick the time zone that matches your location and use this name for the time_zone parameter.	
	Action	Excecute command.
	OID	1.3.6.1.4.1.3181.10.6.3.73.10 (ntpListTimeZones)
time_zone	Enter a string exactly as obtained via list_time_zones command. Note that a change of the time zone if only effective after a system reboot. Important: Linux defines zones west of GMT as + and east as -. This is reverse from common understanding but cannot be changed.	
	Value	String, max. 32 characters.
	OID	1.3.6.1.4.1.3181.10.6.3.73.11 (ntpTimeZone)
time_format	This parameter permits definition of the time format displayed under ntp.local_time. When left blank the default format hrs:min:sec is used. The parameter follows the Linux date command syntax. Please refer to external documentation for details. Use %k:%M for time without seconds. Use %P to add AM/PM where is applies. There are more options.	
	Value	String, max. 64 characters.
	OID	1.3.6.1.4.1.3181.10.6.3.73.12 (ntpTimeFormat)
date_format	This parameter permits definition of the data format displayed under ntp.local_date. When left blank the default format year-month-date is used. The parameter follows the Linux date command syntax. Please refer to external documentation for details. It is also possible to add weekday %A or month %B or week of year %V, etc.	
	Value	String, max. 64 characters.
	OID	1.3.6.1.4.1.3181.10.6.3.73.13 (ntpDateFormat)

©2026 MICROSENS GmbH & Co. KG - Hamm/Germany - www.microsens.com

8.5 NTP Status Parameters

Group	**General Parameters**		
Path	Management.NTP		
status	Indicates by which means the clock was last set.		
	Values	*UNSET*	The real time clock is not set
		MANUALLY_SET	The clock was set via set_time command
		SYNCHRONIZED	The clock is synchronized with an NTP server
		SYNC_FAILED	Synchronization with the NTP server has failed
		DAY_LIGHT_SAVING_TIME	Daylight saving time is active
	OID	1.3.6.1.4.1.3181.10.6.3.73.100 (ntpStatus)	
local_time	Displays the current local date according to selected time zone in the format defined user ntp.time_format.		
	Value	String, max. 64 characters.	
	OID	1.3.6.1.4.1.3181.10.6.3.73.101 (ntpLocalTime)	
local_date	Displays the current local date according to selected time zone in the format defined user ntp.date_format.		
	Value	String, max. 64 characters.	
	OID	1.3.6.1.4.1.3181.10.6.3.73.102 (ntpLocalDate)	
used_ntp_server	Actually used NTP server IP address or name		
	Value	String, max. 128 characters.	
	OID	1.3.6.1.4.1.3181.10.6.3.73.103 (ntpUsedNtpServer)	
dynamic_ntp_server_1	Main dynamically assigned NTP server IP address.		
	Format	IPv4 Address *ddd.ddd.ddd.ddd* (*ddd* = decimal number between 000 to 255)	
	OID	1.3.6.1.4.1.3181.10.6.3.73.104 (ntpDynamicNtpServer1)	
dynamic_ntp_server_2	Alternate dynamically assigned NTP server IP address.		
	Format	IPv4 Address *ddd.ddd.ddd.ddd* (*ddd* = decimal number between 000 to 255)	
	OID	1.3.6.1.4.1.3181.10.6.3.73.105 (ntpDynamicNtpServer2)	

©2026 MICROSENS GmbH & Co. KG - Hamm/Germany - www.microsens.com

dynamic_ntp_server_3	Alternate dynamically assigned NTP server IP address.	
	Format	IPv4 Address *ddd.ddd.ddd.ddd* (*ddd* = decimal number between 000 to 255)
	OID	1.3.6.1.4.1.3181.10.6.3.73.106 (ntpDynamicNtpServer3)
dynamic_ntp_server_4	Alternate dynamically assigned NTP server IP address.	
	Format	IPv4 Address *ddd.ddd.ddd.ddd* (*ddd* = decimal number between 000 to 255)
	OID	1.3.6.1.4.1.3181.10.6.3.73.107 (ntpDynamicNtpServer4)

©2026 MICROSENS GmbH & Co. KG - Hamm/Germany - www.microsens.com

9 File Operations

9.1 Key Features

File Transfer Protocols

File transfers may be used to upgrade the software or to load configuration or script files. The unit supports TFTP, FTP, SFTP, HTTP, HTTPS transfer protocols. Additionally files may be loaded via DHCP directives. The device can act as server or client for FTP, SFTP, FTPS and TFTP.

Numerous file transfer protocols are available. Choose secure versions for privacy, disable unsecure versions.

Firmware Download

Software download can be complete or incremental. The download is independent of its activation. Several firmware versions may reside on the SD card in parallel.

Firmware update is very flexible and independent of actual activation.

Secure Firmware Update

Secure firmware update with encrypted and digitally signed upgrade files. A flexible update mechanism permits customized upgrade files if required. Configuration remains intact after firmware upgrade

By accepting only signed upgrades malware cannot be loaded into the system.

Firmware and Configuration Export and Import

(Industrial Switch only)
Firmware update files and configuration files may be exported and re-imported by another unit via DOS formatted USB memory stick.

This can simplify device duplication when network access is not available.

Script Files

CLI script files may be up and downloaded in the same way as other files. This way for example a network wide special configuration can be distributed.

Scripting may be used to customize the configuration or operation.

Configuration Files

All device configurations are stored in XML files. These may be edited offline (CLI - offline mode) and then be distributed to other devices. Configuration files may be backed up to keep a save copy. A custom factory default configuration may be configured.

State-of-the-Art configuration scheme permits highest flexibility for distribution and storage.

Compare Config and create Transformation Scripts

Device configurations may be compared to view differences. Scripts file are generated that permit automated transformation of one config to another.

State-of-the-Art configuration scheme permits automated bulk configuration updates without losing device specifc settings.

©2026 MICROSENS GmbH & Co. KG - Hamm/Germany - www.microsens.com

Temporary Configuration

Usually, the device configuration should be saved permanently. For some applications like public kiosk systems it is desireable to only temporarily activate a configuration and start afresh with the next user.

Permits reliable use in public network designs.

9.2 Functional Description

The switch has an internal filing system to store CLI scripts, configurations and firmware images and updates. These files can be accessed via standard file transfer protocols (TFTP, FTP, SFTP). To access to the files, the switch can act as client or server.

File access using remote server

When acting as client, the switch can download or upload the files to a remote TFTP/FTP/SFTP server. Before using this method, the corresponding client service must be enabled via 'client.enable_pppp', where 'pppp' stands for the protocol to be used (TFTP/FTP/SFTP). Remote servers can then be accessed using the 'download_from_server' or 'upload_to_server' commands.

File access using remote client

When acting as server, the switch files can be downloaded or uploaded via a remote TFTP/FTP/SFTP client. Before using this method, the corresponding server service must be enabled via 'server.enable_pppp', where 'pppp' stands for the protocol to be used (TFTP/FTP/SFTP). Use a standard file transfer client software (e.g. 'FileZilla') to access the switch internal files.

CLI script files

Sequences of CLI commands to be executed can be stored in script files. When these scripts are executed, the result is identical to manually entering these commands at the CLI prompt. See Section 'Command Line Interface' for a detailed description how these scripts can be generated from CLI output.

Configuration files

The configuration of all switch parameters is stored in XML files, one for each feature-group (e.g. port-specific functions or Spanning Tree Protocol). There can be multiple folders to store different configurations on the device.

Using the 'backup_to_folder', the running configuration can be saved to a folder. The 'restore_from_folder' command retrieves a stored configuration from a folder to the running configuration.

Firmware images and update files

Firmware images or updates are stored in single files. These files can be downloaded from remote servers. Before installing an update, the release information can be displayed. With the 'install_software_update' command, a downloaded update file can be installed to the system.

While installing a firmware update to system the 'on' LED is static green and 'sys' LED is flashing orange. Port 1 to 5 'link' LEDs are blinking blue and changing to static blue one after the other to indicate progress as follows:

LED 'link'	State	Description
P1	blinking	Preparing update and stopping services
P2	blinking	Create backup of existing config
P3	blinking	Extract and copy new files

©2026 MICROSENS GmbH & Co. KG - Hamm/Germany - www.microsens.com

P4	blinking	Restoring configuration
P5	blinking	Cleanup
P1 to 5	static	Done.

Depending on update type the switch may perform a hardware reboot before returning to normal function.

©2026 MICROSENS GmbH & Co. KG - Hamm/Germany - www.microsens.com

9.3 Files CLI Command Reference

The following table lists all CLI commands applicable for this feature section. For each parameter, the access mode is given:

R = Read Only, R/W = Read/Write, X = Executable Action.

Please note that the effective access rights are dependent on the login level of the user.

Category	Group	Table	Parameter	Options	Access	Description
Management.						
	files.					File transfer is used to store and load configuration, script and log files and for software upgrades.
		apps.				This section defines commands to view, load and install apps. The files are also accessible via ftp in the apps directory.
			list_installed_apps		X	Lists which apps are actually installed and ready for use.
			show_notes		X	Displays information about an app . The app does not need to be installed for this operation. Syntax: show_notes = appname
			display_files		X	Displays a list of all available app installation files.
			delete_file		X	Deletes a previously downloaded app installation file. This does not affect unit operation.
			download		X	Apps can be downloaded using various protocols. The downloaded app will not be activated until requested using the install command. Example: download = ftp://name:passwd@machine.domain:port/full/path/to/appfile.app Type = without parameter for additional online help.
			list_media_files		X	Display a list of all app files available on the external media in the apps folder.
			export_to_media		X	The function depends on the type of device. On devices with USB port this action copies to an inserted memory stick. On a micro switch running from internal memory this action copies to an optional DOS formatted SD card. On a PLX export to USB if inserted else SD card is used. On all other switch versions this action will do nothing. When applicable this action copies the specified app file onto the removable media. If the file already exists it is overwritten. Syntax: export_to_media = appname

©2026 MICROSENS GmbH & Co. KG - Hamm/Germany - www.microsens.com

	import_from_media	X	The function depends on the type of device. On devices with USB port this action imports the specified config from an inserted memory stick. On a micro switch running from internal memory this imports the specified config from a DOS formatted SD card. On all other switch versions this action will do nothing. When applicable this action imports the specified app installation file. If the app file name already exists the file is overwritten. Any already running version of the app is not affected. To actually install the imported app use the install command. Syntax: import_from_media = app_file
	install	X	Installs the app as contained in the .app installation file. Syntax: install = myapp.msapp. The .msapp suffix may be omitted. Just typing the app file name (with correct capitalization) will automatically select the latest version available on the device. To update an app simply install the new version without deinstallation first. This will keep the app configuration intact (as far as the app parameter are identical between versions).
	patch	X	Patches an installed app with the data contained in the supplied .app installation file. Syntax: patch = myapp.msapp. The .app suffix may be omitted. Just typing the app name (with correct capitalization) will automatically select the latest version available on the device. IMPORTANT: Only use patch (instead of install) when it is clear that not changes to the parameter structure have been made between the current and the new version. The patch command only copies scripts, image and sound data, but does not make configuration backups etc. It is intended for quick upgrade of script code or to add new images etc. Note: The same .app file is used for install or patch command.
	deinstall	X	Deinstalls the specified app. The app will no longer be active and all configuration and status entries will be removed. The .app file itself is retained for possible future re-installation. Syntax: deinstall = appname. Note there is no need to deinstall prior to installing an update.
scripts.			This section defines commands to manipulate scripts. Sub-folders are permitted. The files are also accessible via ftp in the xml_cli_scripts directory.
	list_files	X	Displays a list of all available script files, their size and date of last change.
	show_file	X	Displays the content of a script file. In order to edit a file please use the EditScriptFile command.
	execute	X	Executes the script file supplied. Example: files.scripts.execute = myscript or ..execute = myfolder/myscript. It also possible to execute a specific subroutine and even to supply parameter to it. Syntax: script:subroutine par1 par2. Parameter with spaces can be enclosed with curly brackets.

©2026 MICROSENS GmbH & Co. KG - Hamm/Germany - www.microsens.com

	download_from_server	X	A script can be downloaded from a server. Example: download_from_server = ftp://name:passwd@machine.domain:port/full/path/to/scriptfile. A local file with same name is overwritten. Type = without parameter for additional online help.
	upload_to_server	X	A script file can be uploaded to a foreign server. Syntax: upload_to_server = scriptfile ftp://user:passwd@ftp.upload.com/target_folder/. Append verbose to the command to start a verbose transfer for trouble shooting. Type = without parameter for additional online help.
	copy_file	X	Copies an existing script file to another file. Example: copy_file = MyScript NewScript. Do not use whitespace in the new file name.
	delete_file	X	Deletes a script file. Careful, there is no undelete.
	terminate	X	This action command can be used to terminate (stop) a background script. This may also be used to terminate a script with an endless loop or a too long wait timer. Syntax: files.scripts.terminate = scriptname or files.scripts.terminate = app/scriptname.
scriptdata.			This section defines commands to manipulate data files created by or to be used by script programs or certain apps. For example script generated log data. The files are also accessible via ftp in the script_data directory.
	list_files	X	Displays a list of all available data files.
	show_file	X	Displays the content of a data file. A text format is assumed. The files cannot not be edited via CLI or the embedded editor within the CLI.
	download_from_server	X	A data file can be downloaded. Various protocols may be used. Example: download_from_server = ftp://name:passwd@machine.domain:port/full/path/to/scriptfile. A possible existing local file with same name is overwritten. Type = without parameter for additional online help.
	upload_to_server	X	A script data file can be uploaded. Various protocols may be used. Example: upload_to_server = scriptfile ftp://user:passwd@ftp.upload.com/ Type = without parameter for additional online help.
	copy_file	X	Copies an existing data file to another file. Example: copy_file = MyData NewData. Do not use whitespace in the new file name.
	delete_file	X	Deletes a data file. It does not delete a script file. There is no undelete!
	list_media_files	X	Display a list of all files available on the external media in the script_data folder.

©2026 MICROSENS GmbH & Co. KG - Hamm/Germany - www.microsens.com

	export_to_media	X	The function depends on the type of device. On devices with USB port this action copies to an inserted memory stick. On a micro switch running from internal memory this action copies to an optional DOS formatted SD card. On all other switch versions this action will do nothing. When applicable this action copies the specified script_data file(s) onto the removable media. If the file(s) already exists it is overwritten. Syntax: export_to_media = filename Wildcard * is supported to copy many files at once.
	import_from_media	X	The function depends on the type of device. On devices with USB port this action imports the specified config from an inserted memory stick. On a micro switch running from internal memory this imports the specified config from a DOS formatted SD card. On all other switch versions this action will do nothing. When applicable this action imports the specified files to the script_data folder. If the file(s) already exists they are overwritten. Syntax: import_from_media = filename.
configuration.			This section defines commands to load and store the system configuration. The configuration files are also accessible via ftp under the config directory.
	list_folders	X	Displays a list of all available configuration folders.
	backup_to_folder	X	Copies running configuration to a new or existing folder. If the folder name already exists the previous configuration is overwritten. Syntax: backup_to_folder = my_new_config
	restore_from_folder	X	Restores and activates the specified user configuration. Each resulting config change will be logged as usual. Specify source folder. Syntax: restore_from_folder = folder_name. Important: This command does not restore the IP and factory configuration files.
	commit_config	X	Commits the config to SD card now. Data are otherwise autosaved using a timer. Use this command to speed up the process. Syntax: commit_config = folder_name. Special case: 'commit_config =' will be automatically extended to 'running' to immediately save the currently running configuration. Use this command to permanently store the configuration while system.config_save_mode = TEMPORARILY is selected.
	compare_configuration	X	Compares two configurations and creates CLI script file that can transform the configurations to each other. Syntax: compare_configuration = (with no argument behind =) compares running config against factory config (as defined by factory_default_folder). compare_configuration = somename compares config somename against factory_default_folder. compare_configuration = somename someothername compares the two named configurations. Special names are factory (factory defaults) and running (currently active configuration).
	copy_folder	X	Copies one user config to another. The config will not be activated. Do not use whitespace for the new configuration name.

©2026 MICROSENS GmbH & Co. KG - Hamm/Germany - www.microsens.com

delete_folder	X	Deletes the specified user config. There is no undelete ! When a larger number of configurations should be deleted it may be helpful to use a helper script: CLI Syntax: RunScriptFile = MS_CleanUp.ms then follow the help output.
download_from_server	X	A configuration packed as tar or gztar file can be downloaded to a custom folder. Example: download_from_server = local_config_name ftp://name:passwd@machine.domain/full/path/to/config_file The downloaded config is not automatically activated. Type = without parameter for additional online help.
upload_to_server	X	The content of the specified configuration folder is compressed into a single file (in tar.gz format) and then uploaded to a server. Various protocols may be used. Example: upload_to_server = folder ftp://user:passwd@ftp.upload.com/dir/ Note the trailing / is mandatory for ftp. Instead of a hostname an IP address may be specified. Instead of ftp other transport formats like tftp or http can be specified. The saved file will be prefixed by the local IP address of the sending device. Type = without parameter for additional online help.
list_media_folders	X	Display a list of all configuration folders available on the external media.
export_to_media	X	The function depends on the type of device. On devices with USB port this action copies to an inserted memory stick. On a micro switch running from internal memory this action copies to an optional DOS formatted SD card. On a PLX export is to USB stick if inserted else to SD card. On all other switch versions this action will do nothing. When applicable this action copies the specified configuration folder to a new or existing folder on the removable media. If the folder name already exists the previous configuration is overwritten. Syntax: export_media = running (This example copies the actively running config to folder config/running)
import_from_media	X	The function depends on the type of device. On devices with USB port this action imports the specified config from an inserted memory stick. On a micro switch running from internal memory this imports the specified config from a DOS formatted SD card. On all other switch versions this action will do nothing. When applicable this action imports the specified configuration to a new or existing user folder. If the folder name already exists the previous configuration is overwritten. The config folder must be located under config/name to be detected. Note that when a reserved name like running is imported, the folder is imported as running_imported. To actually activate the imported config use the restore_from_folder action. Syntax: import_from_media = my_new_config
factory_default_folder	R/W	This parameter permits the definition of a customer specific alternative factory configuration. Care must be taken to create the desired folder beforehand via download or the backup_to_folder command.

©2026 MICROSENS GmbH & Co. KG - Hamm/Germany - www.microsens.com

	force_factory_default	X	This forcibly overwrites the current configuration with the factory files bypassing regular processing. This is intended for service personnel only and requires special permission. For normal return to factory settings please use restore_from_folder = factory command.
firmware.			This section defines commands to view, load and update the system firmware.
	list_installed_versions	X	Lists detailed version information of individual system programs.
	display_files	X	Displays a list of all available software files.
	delete_file	X	Deletes a previously downloaded firmware file. This does not affect unit operation. When a larger number of files should be deleted it may be helpful to use a helper script: CLI Syntax: RunScriptFile = MS_CleanUp.ms then follow the help output.
	download	X	Complete updates or patches can be downloaded using various protocols. The downloaded files will not be activated until requested using the install_software_update command. Example: download = ftp://name:passwd@machine.domain:port/full/path/to/firmwarefile. Type = without parameter for additional online help.
	verify_update_file	X	Verifies the software contained in the update file specified as parameter. Syntax: verify_update_file = newcode.msu The file will not be installed, just verified.
	show_release_notes	X	Use to read information about a particular software archive file. Syntax: show_release_notes = filename
	install_software_update	X	Installs the software as contained in the update file specified as parameter. Syntax: install_software_update = newcode.msu NOTE: the unit may automatically reboot after the installation.
	list_media_files	X	Display a list of all firmware files available on the external media in the updates folder.
	export_to_media	X	The function depends on the type of device. On devices with USB port this action copies to an inserted memory stick. On a micro switch running from internal memory this action copies to an optional DOS formatted SD card. On a PLX it is exported to USB when plugged-in and otherwise to SD card. All other switch versions this action will do nothing. When applicable this action copies the specified firmware update file (msu) onto the removable media. If the file already exists it is overwritten. Syntax: export_media = u_10_3_3.msu
	import_from_media	X	The function depends on the type of device. On devices with USB port this action imports the specified config from an inserted memory stick. On a micro switch running from internal memory this imports the specified config from a DOS formatted SD card. On all other switch versions this action will do nothing. When applicable this action imports all firmware update files (msu files) located in the root directory of the media. No parameter are required. Syntax: import_from_media

©2026 MICROSENS GmbH & Co. KG - Hamm/Germany - www.microsens.com

	mirror_sd_card	X	The function mirrors the whole content of the SD card into the internal flash memory of a micro switch with internal memory. This command only executes when the device is currently running on the SD card to be copied. On switch versions without internal memory nothing will happen. There are two options. OVERWRITE: All data previously stored in the internal memory, including config and passwords, is overwritten. Possibly existing custom configurations or scripts are retained. REPLACE: The internal memory is first erased before the copy commences. Any existing data are removed. This assures are clean copy of the SD card without possible extra data being retained. Note: The mirror command will not operate when system.boot_preference is set to INTERN_ONLY to safeguard the device against an illegally inserted SD card. Syntax: mirror_sd_card = OVERWRITE (or REPLACE) (uppercase).
certificate.			This section defines commands use private SSL certificate for secure web access.
	list_files	X	Displays a list of all custom certificates available.
	download_from_server	X	Custom certificate files can be downloaded. Various protocols may be used. Example: download_from_server = ftp://name:passwd@machine.domain:port/full/path/to/certificatefile. A possible local file with same name is overwritten. Type = without parameter for additional online help.
	upload_to_server	X	Custom certificate files can be uploaded. Various protocols may be used. Example: upload_to_server = certificate_file ftp://user:passwd@ftp.upload.com/ Type = without parameter for additional online help.
	delete_file	X	Deletes an individual certificate file. The full name must be specified.
	activate_for_web	X	Activates the specified certificate to become active immediately for https. Syntax: activate_for_web = target certificate_name. Use target: CRT or KEY. Expects 'certificate_name.crt' and 'certificate_name.key' in certificate directory and optionally 'certificate_name.chain.crt' to be used as chain certificate file.
	deactivate_for_web	X	Deactivates the specified target certificate for the web interface. Syntax: deactivate_for_web = target. Use target: CRT or KEY. No certificate name is required. The certificate is not deleted, it is just not used anymore.
	activate_for_supplicant	X	Activates the specified certificate to become active immediately for the supplicant. Syntax: activate_for_supplicant = target certificate_name. Use target: CA, LOCAL or KEY. Expects existing certificate file name.
	deactivate_for_supplicant	X	Deactivates the specified target certificate for the supplicant. Syntax: deactivate_for_supplicant = target. Use target: CA, LOCAL or KEY. No certificate name is required. The certificate is not deleted, it is just not used anymore.

©2026 MICROSENS GmbH & Co. KG - Hamm/Germany - www.microsens.com

	activate_for_snmp	X	Activates the specified certificate to become active for snmp v3 in TSM mode. Syntax: activate_for_snmp = AGENT certificate_name or activate_for_snmp = MANAGER certificate_name user_name. The user name must exist as a local user (See management.acess.user). Several user can be assigned to the same certificate. Expects an existing certificate file name and key file with same name. Enable TSM module in SNMP.v3_config.security_model.
	deactivate_for_snmp	X	Deactivates the specified target certificate for snmp v3. Syntax: deactivate_for_snmp = AGENT or deactivate_for_snmp = MANAGER certificate_name username. The username is optional. When omitted, then all user assigned to the specified MANAGER certicate are deactivated. The certificate is not deleted, it is just not used anymore.
	view_active_certificates	X	Displays the content of all currently active certificates.
license.			This section defines commands install, active and check software licensing files.
	list_files	X	Displays a list of all licenses installed.
	show_file	X	Displays the content of a selected license file. License files are human readable. Be aware that any manual change to then will invalidate the signature.
	download_from_server	X	License files can be downloaded. Various protocols may be used. Example: download_from_server = ftp:// name:passwd@machine.domain:port/full/ path/to/certificatefile. A possible local file with same name is overwritten. Type = without parameter for additional online help.
	delete_file	X	Deletes an individual license file. The full name must be specified.
	activate	X	Activates all available licenses to become active immediately. No parameter are required. Licenses are also activated upon system start.
	view_active_licenses	X	Displays a summary of all licenses and their expiration dates.
history.			This section defines commands to access the history files created of history logging is enabled. The files are also accessible via ftp in the history directory.
	list_files	X	Displays a list of all available history files.
	show_file	X	Displays the content of a history file. The files cannot not be edited via CLI or the embedded editor within the CLI.
	upload_to_server	X	A script data file can be uploaded. Various protocols may be used. Example: upload_to_server = file ftp:// user:passwd@ftp.upload.com/ Type = without parameter for additional online help.
	copy_file	X	Copies an existing history data file to another file. Example: copy_file = history_file backup_name. Do not use whitespace in the new file name.

©2026 MICROSENS GmbH & Co. KG - Hamm/Germany - www.microsens.com

	delete_file	X	Deletes a history file. When a file is deleted, which is still updated by the history process, then a new file started as soon as the next history update cycle starts.
	list_media_files	X	Display a list of all history files available on the external media in the history folder.
	export_to_media	X	The function depends on the type of device. On devices with USB port this action copies to an inserted memory stick. On a micro switch running from internal memory this action copies to an optional DOS formatted SD card. On all other switch versions this action will do nothing. When applicable this action copies the specified history files onto the removable media. If a file already exists it is overwritten. Syntax: export_media = filename. Wildcard * may be used to select several files at once. Example: temperature_day_2017_11* to get all files of November.
logfiles.			This section permits read access to various system log files. The files are also accessible via ftp in the logs directory.
	list_files	X	Displays a list of all available log files.
	show_file	X	Displays the content of a log file. The files cannot not be edited via CLI or the embedded editor within the CLI.
	show_last_update_log	X	Displays the last firmware update logfile.
	upload_last_snapshot	X	A system snapshot contains all data required for comprehensive offsite troubleshooting. A snapshot can be created under Device.system.create_snapshot. Use the upload command to send the result to a remote system. Example: upload_last_snapshot = ftp:// user:passwd@ftp.upload.com/ Type = without parameter for additional online help.
	export_to_media	X	The function depends on the type of device. On devices with USB port this action copies to an inserted memory stick. On a micro switch running from internal memory this action copies to an optional DOS formatted SD card. On all other switch versions this action will do nothing. When applicable this action copies all log files onto the removable media.
server.			The different file transfer protocols may individually be enabled or disabled for protection.
	enable_tftp	R/W	Enable TFTP server for file up-/download.
	enable_ftp	R/W	Enable FTP server for file up-/download.
	enable_sftp	R/W	Enable SFTP server for file up-/download. Note SFTP also requires SSH to be enabled (see CLI settings). TCP/IP Port 8022 is used.
	enable_api	R/W	Enable API server for dotstring management via https.
	enable_rest	R/W	Enable REST api server for dotstring management via https.
	enable_json_rpc	R/W	Enable JSON/RPC interface for M2M management via https.

©2026 MICROSENS GmbH & Co. KG - Hamm/Germany - www.microsens.com

9.4 Files Configuration Parameters

Group	**apps**
Path	Management.Files.apps
Description	This section defines commands to view, load and install apps. The files are also accessible via ftp in the apps directory.

list_installed_apps	Lists which apps are actually installed and ready for use.	
	Action	Excecute command.
	OID	1.3.6.1.4.1.3181.10.6.3.72.1.1.2 (appsListInstalledApps)
show_notes	Displays information about an app . The app does not need to be installed for this operation. Syntax: show_notes = appname	
	Action	Excecute command with parameter string max. 32 characters.
	OID	1.3.6.1.4.1.3181.10.6.3.72.1.1.3 (appsShowNotes)
display_files	Displays a list of all available app installation files.	
	Action	Excecute command.
	OID	1.3.6.1.4.1.3181.10.6.3.72.1.1.4 (appsDisplayFiles)
delete_file	Deletes a previously downloaded app installation file. This does not affect unit operation.	
	Action	Excecute command with parameter string max. 32 characters.
	OID	1.3.6.1.4.1.3181.10.6.3.72.1.1.5 (appsDeleteFile)
download	Apps can be downloaded using various protocols. The downloaded app will not be activated until requested using the install command. Example: download = ftp://name:passwd@machine.domain:port/full/path/to/appfile.app Type = without parameter for additional online help.	
	Action	Excecute command with parameter string max. 128 characters.
	OID	1.3.6.1.4.1.3181.10.6.3.72.1.1.6 (appsDownload)
list_media_files	Display a list of all app files available on the external media in the apps folder.	
	Action	Excecute command.
	OID	1.3.6.1.4.1.3181.10.6.3.72.1.1.7 (appsListMediaFiles)

©2026 MICROSENS GmbH & Co. KG - Hamm/Germany - www.microsens.com

export_to_media	The function depends on the type of device. On devices with USB port this action copies to an inserted memory stick. On a micro switch running from internal memory this action copies to an optional DOS formatted SD card. On a PLX export to USB if inserted else SD card is used. On all other switch versions this action will do nothing. When applicable this action copies the specified app file onto the removable media. If the file already exists it is overwritten. Syntax: export_to_media = appname **Action** Excecute command with parameter string max. 128 characters. **OID** 1.3.6.1.4.1.3181.10.6.3.72.1.1.8 (appsExportToMedia)
import_from_media	The function depends on the type of device. On devices with USB port this action imports the specified config from an inserted memory stick. On a micro switch running from internal memory this imports the specified config from a DOS formatted SD card. On all other switch versions this action will do nothing. When applicable this action imports the specified app installation file. If the app file name already exists the file is overwritten. Any already running version of the app is not affected. To actually install the imported app use the install command. Syntax: import_from_media = app_file **Action** Excecute command with parameter string max. 128 characters. **OID** 1.3.6.1.4.1.3181.10.6.3.72.1.1.9 (appsImportFromMedia)
install	Installs the app as contained in the .app installation file. Syntax: install = myapp.msapp. The .msapp suffix may be omitted. Just typing the app file name (with correct capitalization) will automatically select the latest version available on the device. To update an app simply install the new version without deinstallation first. This will keep the app configuration intact (as far as the app parameter are identical between versions). **Action** Excecute command with parameter string max. 32 characters. **OID** 1.3.6.1.4.1.3181.10.6.3.72.1.1.10 (appsInstall)
patch	Patches an installed app with the data contained in the supplied .app installation file. Syntax: patch = myapp.msapp. The .app suffix may be omitted. Just typing the app name (with correct capitalization) will automatically select the latest version available on the device. IMPORTANT: Only use patch (instead of install) when it is clear that not changes to the parameter structure have been made between the current and the new version. The patch command only copies scripts, image and sound data, but does not make configuration backups etc. It is intended for quick upgrade of script code or to add new images etc. Note: The same .app file is used for install or patch command. **Action** Excecute command with parameter string max. 32 characters. **OID** 1.3.6.1.4.1.3181.10.6.3.72.1.1.11 (appsPatch)

©2026 MICROSENS GmbH & Co. KG - Hamm/Germany - www.microsens.com

deinstall	Deinstalls the specified app. The app will no longer be active and all configuration and status entries will be removed. The .app file itself is retained for possible future re-installation. Syntax: deinstall = appname. Note there is no need to deinstall prior to installing an update. **Action** Excecute command with parameter string max. 32 characters. **OID** 1.3.6.1.4.1.3181.10.6.3.72.1.1.12 (appsDeinstall)

Group	**scripts**
Path	Management.Files.scripts
Description	This section defines commands to manipulate scripts. Sub-folders are permitted. The files are also accessible via ftp in the xml_cli_scripts directory.
list_files	Displays a list of all available script files, their size and date of last change. **Action** Excecute command. **OID** 1.3.6.1.4.1.3181.10.6.3.72.2.1.2 (scriptsListFiles)
show_file	Displays the content of a script file. In order to edit a file please use the EditScriptFile command. **Action** Excecute command with parameter string max. 128 characters. **OID** 1.3.6.1.4.1.3181.10.6.3.72.2.1.3 (scriptsShowFile)
execute	Executes the script file supplied. Example: files.scripts.execute = myscript or ..execute = myfolder/myscript. It also possible to execute a specific subroutine and even to supply parameter to it. Syntax: script:subroutine par1 par2. Parameter with spaces can be enclosed with curly brackets. **Action** Excecute command with parameter string max. 128 characters. **OID** 1.3.6.1.4.1.3181.10.6.3.72.2.1.4 (scriptsExecute)
download_from_server	A script can be downloaded from a server. Example: download_from_server = ftp://name:passwd@machine.domain:port/full/path/to/scriptfile. A local file with same name is overwritten. Type = without parameter for additional online help. **Action** Excecute command with parameter string max. 128 characters. **OID** 1.3.6.1.4.1.3181.10.6.3.72.2.1.5 (scriptsDownloadFromServer)

©2026 MICROSENS GmbH & Co. KG - Hamm/Germany - www.microsens.com

upload_to_server	A script file can be uploaded to a foreign server. Syntax: upload_to_server = scriptfile ftp://user:passwd@ftp.upload.com/target_folder/. Append verbose to the command to start a verbose transfer for trouble shooting. Type = without parameter for additional online help. **Action** Excecute command with parameter string max. 128 characters. **OID** 1.3.6.1.4.1.3181.10.6.3.72.2.1.6 (scriptsUploadToServer)
copy_file	Copies an existing script file to another file. Example: copy_file = MyScript NewScript. Do not use whitespace in the new file name. **Action** Excecute command with parameter string max. 128 characters. **OID** 1.3.6.1.4.1.3181.10.6.3.72.2.1.7 (scriptsCopyFile)
delete_file	Deletes a script file. Careful, there is no undelete. **Action** Excecute command with parameter string max. 128 characters. **OID** 1.3.6.1.4.1.3181.10.6.3.72.2.1.8 (scriptsDeleteFile)
terminate	This action command can be used to terminate (stop) a background script. This may also be used to terminate a script with an endless loop or a too long wait timer. Syntax: files.scripts.terminate = scriptname or files.scripts.terminate = app/scriptname. **Action** Excecute command with parameter string max. 128 characters. **OID** 1.3.6.1.4.1.3181.10.6.3.72.2.1.9 (scriptsTerminate)

Group	**scriptdata**
Path	Management.Files.scriptdata
Description	This section defines commands to manipulate data files created by or to be used by script programs or certain apps. For example script generated log data. The files are also accessible via ftp in the script_data directory.

list_files	Displays a list of all available data files. **Action** Excecute command. **OID** 1.3.6.1.4.1.3181.10.6.3.72.3.1.2 (scriptdataListFiles)
show_file	Displays the content of a data file. A text format is assumed. The files cannot not be edited via CLI or the embedded editor within the CLI. **Action** Excecute command with parameter string max. 128 characters. **OID** 1.3.6.1.4.1.3181.10.6.3.72.3.1.3 (scriptdataShowFile)

©2026 MICROSENS GmbH & Co. KG - Hamm/Germany - www.microsens.com

download_from_server	A data file can be downloaded. Various protocols may be used. Example: download_from_server = ftp://name:passwd@machine.domain:port/full/path/to/scriptfile. A possible existing local file with same name is overwritten. Type = without parameter for additional online help. **Action** Excecute command with parameter string max. 128 characters. **OID** 1.3.6.1.4.1.3181.10.6.3.72.3.1.4 (scriptdataDownloadFromServer)
upload_to_server	A script data file can be uploaded. Various protocols may be used. Example: upload_to_server = scriptfile ftp://user:passwd@ftp.upload.com/ Type = without parameter for additional online help. **Action** Excecute command with parameter string max. 128 characters. **OID** 1.3.6.1.4.1.3181.10.6.3.72.3.1.5 (scriptdataUploadToServer)
copy_file	Copies an existing data file to another file. Example: copy_file = MyData NewData. Do not use whitespace in the new file name. **Action** Excecute command with parameter string max. 128 characters. **OID** 1.3.6.1.4.1.3181.10.6.3.72.3.1.6 (scriptdataCopyFile)
delete_file	Deletes a data file. It does not delete a script file. There is no undelete! **Action** Excecute command with parameter string max. 128 characters. **OID** 1.3.6.1.4.1.3181.10.6.3.72.3.1.7 (scriptdataDeleteFile)
list_media_files	Display a list of all files available on the external media in the script_data folder. **Action** Excecute command. **OID** 1.3.6.1.4.1.3181.10.6.3.72.3.1.8 (scriptdataListMediaFiles)
export_to_media	The function depends on the type of device. On devices with USB port this action copies to an inserted memory stick. On a micro switch running from internal memory this action copies to an optional DOS formatted SD card. On all other switch versions this action will do nothing. When applicable this action copies the specified script_data file(s) onto the removable media. If the file(s) already exists it is overwritten. Syntax: export_to_media = filename Wildcard * is supported to copy many files at once. **Action** Excecute command with parameter string max. 128 characters. **OID** 1.3.6.1.4.1.3181.10.6.3.72.3.1.9 (scriptdataExportToMedia)

©2026 MICROSENS GmbH & Co. KG - Hamm/Germany - www.microsens.com

import_from_media	The function depends on the type of device. On devices with USB port this action imports the specified config from an inserted memory stick. On a micro switch running from internal memory this imports the specified config from a DOS formatted SD card. On all other switch versions this action will do nothing. When applicable this action imports the specified files to the script_data folder. If the file(s) already exists they are overwritten. Syntax: import_from_media = filename. **Action** Excecute command with parameter string max. 128 characters. **OID** 1.3.6.1.4.1.3181.10.6.3.72.3.1.10 (scriptdataImportFromMedia)

Group	**configuration**
Path	Management.Files.configuration
Description	This section defines commands to load and store the system configuration. The configuration files are also accessible via ftp under the config directory.

list_folders	Displays a list of all available configuration folders. **Action** Excecute command. **OID** 1.3.6.1.4.1.3181.10.6.3.72.4.1.2 (configurationListFolders)
backup_to_folder	Copies running configuration to a new or existing folder. If the folder name already exists the previous configuration is overwritten. Syntax: backup_to_folder = my_new_config **Action** Excecute command with parameter string max. 128 characters. **OID** 1.3.6.1.4.1.3181.10.6.3.72.4.1.3 (configurationBackupToFolder)
restore_from_folder	Restores and activates the specified user configuration. Each resulting config change will be logged as usual. Specify source folder. Syntax: restore_from_folder = folder_name. Important: This command does not restore the IP and factory configuration files. **Action** Excecute command with parameter string max. 128 characters. **OID** 1.3.6.1.4.1.3181.10.6.3.72.4.1.4 (configurationRestoreFromFolder)

©2026 MICROSENS GmbH & Co. KG - Hamm/Germany - www.microsens.com

commit_config	Commits the config to SD card now. Data are otherwise autosaved using a timer. Use this command to speed up the process. Syntax: commit_config = folder_name. Special case: 'commit_config =' will be automatically extended to 'running' to immediately save the currently running configuration. Use this command to permanently store the configuration while system.config_save_mode = TEMPORARILY is selected. **Action** Excecute command with parameter string max. 128 characters. **OID** 1.3.6.1.4.1.3181.10.6.3.72.4.1.5 (configurationCommitConfig)
compare_configuration	Compares two configurations and creates CLI script file that can transform the configurations to each other. Syntax: compare_configuration = (with no argument behind =) compares running config against factory config (as defined by factory_default_folder). compare_configuration = somename compares config somename against factory_default_folder. compare_configuration = somename someothername compares the two named configurations. Special names are factory (factory defaults) and running (currently active configuration). **Action** Excecute command with parameter string max. 128 characters. **OID** 1.3.6.1.4.1.3181.10.6.3.72.4.1.6 (configurationCompareConfiguration)
copy_folder	Copies one user config to another. The config will not be activated. Do not use whitespace for the new configuration name. **Action** Excecute command with parameter string max. 128 characters. **OID** 1.3.6.1.4.1.3181.10.6.3.72.4.1.7 (configurationCopyFolder)
delete_folder	Deletes the specified user config. There is no undelete ! When a larger number of configurations should be deleted it may be helpful to use a helper script: CLI Syntax: RunScriptFile = MS_CleanUp.ms then follow the help output. **Action** Excecute command with parameter string max. 128 characters. **OID** 1.3.6.1.4.1.3181.10.6.3.72.4.1.8 (configurationDeleteFolder)
download_from_server	A configuration packed as tar or gztar file can be downloaded to a custom folder. Example: download_from_server = local_config_name ftp://name:passwd@machine.domain/full/path/to/config_file The downloaded config is not automatically activated. Type = without parameter for additional online help. **Action** Excecute command with parameter string max. 128 characters. **OID** 1.3.6.1.4.1.3181.10.6.3.72.4.1.9 (configurationDownloadFromServer)

©2026 MICROSENS GmbH & Co. KG - Hamm/Germany - www.microsens.com

upload_to_server	The content of the specified configuration folder is compressed into a single file (in tar.gz format) and then uploaded to a server. Various protocols may be used. Example: upload_to_server = folder ftp://user:passwd@ftp.upload.com/dir/ Note the trailing / is mandatory for ftp. Instead of a hostname an IP address may be specified. Instead of ftp other transport formats like tftp or http can be specified. The saved file will be prefixed by the local IP address of the sending device. Type = without parameter for additional online help. **Action** Excecute command with parameter string max. 128 characters. **OID** 1.3.6.1.4.1.3181.10.6.3.72.4.1.10 (configurationUploadToServer)
list_media_folders	Display a list of all configuration folders available on the external media. **Action** Excecute command. **OID** 1.3.6.1.4.1.3181.10.6.3.72.4.1.11 (configurationListMediaFolders)
export_to_media	The function depends on the type of device. On devices with USB port this action copies to an inserted memory stick. On a micro switch running from internal memory this action copies to an optional DOS formatted SD card. On a PLX export is to USB stick if inserted else to SD card. On all other switch versions this action will do nothing. When applicable this action copies the specified configuration folder to a new or existing folder on the removable media. If the folder name already exists the previous configuration is overwritten. Syntax: export_media = running (This example copies the actively running config to folder config/running) **Action** Excecute command with parameter string max. 128 characters. **OID** 1.3.6.1.4.1.3181.10.6.3.72.4.1.12 (configurationExportToMedia)
import_from_media	The function depends on the type of device. On devices with USB port this action imports the specified config from an inserted memory stick. On a micro switch running from internal memory this imports the specified config from a DOS formatted SD card. On all other switch versions this action will do nothing. When applicable this action imports the specified configuration to a new or existing user folder. If the folder name already exists the previous configuration is overwritten. The config folder must be located under config/name to be detected. Note that when a reserved name like running is imported, the folder is imported as running_imported. To actually activate the imported config use the restore_from_folder action. Syntax: import_from_media = my_new_config **Action** Excecute command with parameter string max. 128 characters. **OID** 1.3.6.1.4.1.3181.10.6.3.72.4.1.13 (configurationImportFromMedia)
factory_default_folder	This parameter permits the definition of a customer specific alternative factory configuration. Care must be taken to create the desired folder beforehand via download or the backup_to_folder command. **Value** String, max. 32 characters. **OID** 1.3.6.1.4.1.3181.10.6.3.72.4.1.14 (configurationFactoryDefaultFolder)

©2026 MICROSENS GmbH & Co. KG - Hamm/Germany - www.microsens.com

force_factory_default	This forcibly overwrites the current configuration with the factory files bypassing regular processing. This is intended for service personnel only and requires special permission. For normal return to factory settings please use restore_from_folder = factory command. **Action** Excecute command with parameter string max. 16 characters. **OID** 1.3.6.1.4.1.3181.10.6.3.72.4.1.15 (configurationForceFactoryDefault)

Group	**firmware**
Path	Management.Files.firmware
Description	This section defines commands to view, load and update the system firmware.

list_installed_versions	Lists detailed version information of individual system programs. **Action** Excecute command. **OID** 1.3.6.1.4.1.3181.10.6.3.72.5.1.2 (firmwareListInstalledVersions)
display_files	Displays a list of all available software files. **Action** Excecute command. **OID** 1.3.6.1.4.1.3181.10.6.3.72.5.1.3 (firmwareDisplayFiles)
delete_file	Deletes a previously downloaded firmware file. This does not affect unit operation. When a larger number of files should be deleted it may be helpful to use a helper script: CLI Syntax: RunScriptFile = MS_CleanUp.ms then follow the help output. **Action** Excecute command with parameter string max. 48 characters. **OID** 1.3.6.1.4.1.3181.10.6.3.72.5.1.4 (firmwareDeleteFile)
download	Complete updates or patches can be downloaded using various protocols. The downloaded files will not be activated until requested using the install_software_update command. Example: download = ftp:// name:passwd@machine.domain:port/full/path/to/firmwarefile. Type = without parameter for additional online help. **Action** Excecute command with parameter string max. 128 characters. **OID** 1.3.6.1.4.1.3181.10.6.3.72.5.1.5 (firmwareDownload)

©2026 MICROSENS GmbH & Co. KG - Hamm/Germany - www.microsens.com

verify_update_file	Verifies the software contained in the update file specified as parameter. Syntax: verify_update_file = newcode.msu The file will not be installed, just verified. **Action** Excecute command with parameter string max. 48 characters. **OID** 1.3.6.1.4.1.3181.10.6.3.72.5.1.6 (firmwareVerifyUpdateFile)
show_release_notes	Use to read information about a particular software archive file. Syntax: show_release_notes = filename **Action** Excecute command with parameter string max. 48 characters. **OID** 1.3.6.1.4.1.3181.10.6.3.72.5.1.7 (firmwareShowReleaseNotes)
install_software_update	Installs the software as contained in the update file specified as parameter. Syntax: install_software_update = newcode.msu NOTE: the unit may automatically reboot after the installation. **Action** Excecute command with parameter string max. 48 characters. **OID** 1.3.6.1.4.1.3181.10.6.3.72.5.1.8 (firmwareInstallSoftwareUpdate)
list_media_files	Display a list of all firmware files available on the external media in the updates folder. **Action** Excecute command. **OID** 1.3.6.1.4.1.3181.10.6.3.72.5.1.9 (firmwareListMediaFiles)
export_to_media	The function depends on the type of device. On devices with USB port this action copies to an inserted memory stick. On a micro switch running from internal memory this action copies to an optional DOS formatted SD card. On a PLX it is exported to USB when plugged-in and otherwise to SD card. All other switch versions this action will do nothing. When applicable this action copies the specified firmware update file (msu) onto the removable media. If the file already exists it is overwritten. Syntax: export_media = u_10_3_3.msu **Action** Excecute command with parameter string max. 128 characters. **OID** 1.3.6.1.4.1.3181.10.6.3.72.5.1.10 (firmwareExportToMedia)
import_from_media	The function depends on the type of device. On devices with USB port this action imports the specified config from an inserted memory stick. On a micro switch running from internal memory this imports the specified config from a DOS formatted SD card. On all other switch versions this action will do nothing. When applicable this action imports all firmware update files (msu files) located in the root directory of the media. No parameter are required. Syntax: import_from_media **Action** Excecute command. **OID** 1.3.6.1.4.1.3181.10.6.3.72.5.1.11 (firmwareImportFromMedia)

©2026 MICROSENS GmbH & Co. KG - Hamm/Germany - www.microsens.com

mirror_sd_card	The function mirrors the whole content of the SD card into the internal flash memory of a micro switch with internal memory. This command only executes when the device is currently running on the SD card to be copied. On switch versions without internal memory nothing will happen. There are two options. OVERWRITE: All data previously stored in the internal memory, including config and passwords, is overwritten. Possibly existing custom configurations or scripts are retained. REPLACE: The internal memory is first erased before the copy commences. Any existing data are removed. This assures are clean copy of the SD card without possible extra data being retained. Note: The mirror command will not operate when system.boot_preference is set to INTERN_ONLY to safeguard the device against an illegally inserted SD card. Syntax: mirror_sd_card = OVERWRITE (or REPLACE) (uppercase). **Action** Excecute command with parameter string max. 16 characters. **OID** 1.3.6.1.4.1.3181.10.6.3.72.5.1.12 (firmwareMirrorSdCard)

Group	**certificate**
Path	Management.Files.certificate
Description	This section defines commands use private SSL certificate for secure web access.

list_files	Displays a list of all custom certificates available. **Action** Excecute command. **OID** 1.3.6.1.4.1.3181.10.6.3.72.6.1.2 (certificateListFiles)
download_from_server	Custom certificate files can be downloaded. Various protocols may be used. Example: download_from_server = ftp:// name:passwd@machine.domain:port/full/path/to/certificatefile. A possible local file with same name is overwritten. Type = without parameter for additional online help. **Action** Excecute command with parameter string max. 128 characters. **OID** 1.3.6.1.4.1.3181.10.6.3.72.6.1.3 (certificateDownloadFromServer)
upload_to_server	Custom certificate files can be uploaded. Various protocols may be used. Example: upload_to_server = certificate_file ftp:// user:passwd@ftp.upload.com/ Type = without parameter for additional online help. **Action** Excecute command with parameter string max. 128 characters. **OID** 1.3.6.1.4.1.3181.10.6.3.72.6.1.4 (certificateUploadToServer)

©2026 MICROSENS GmbH & Co. KG - Hamm/Germany - www.microsens.com

delete_file	Deletes an individual certificate file. The full name must be specified.	
	Action	Excecute command with parameter string max. 128 characters.
	OID	1.3.6.1.4.1.3181.10.6.3.72.6.1.5 (certificateDeleteFile)
activate_for_web	Activates the specified certificate to become active immediately for https. Syntax: activate_for_web = target certificate_name. Use target: CRT or KEY. Expects 'certificate_name.crt' and 'certificate_name.key' in certificate directory and optionally 'certificate_name.chain.crt' to be used as chain certificate file.	
	Action	Excecute command with parameter string max. 128 characters.
	OID	1.3.6.1.4.1.3181.10.6.3.72.6.1.6 (certificateActivateForWeb)
deactivate_for_web	Deactivates the specified target certificate for the web interface. Syntax: deactivate_for_web = target. Use target: CRT or KEY. No certificate name is required. The certificate is not deleted, it is just not used anymore.	
	Action	Excecute command with parameter string max. 16 characters.
	OID	1.3.6.1.4.1.3181.10.6.3.72.6.1.7 (certificateDeactivateForWeb)
activate_for_supplicant	Activates the specified certificate to become active immediately for the supplicant. Syntax: activate_for_supplicant = target certificate_name. Use target: CA, LOCAL or KEY. Expects existing certificate file name.	
	Action	Excecute command with parameter string max. 128 characters.
	OID	1.3.6.1.4.1.3181.10.6.3.72.6.1.8 (certificateActivateForSupplicant)
deactivate_for_supplicant	Deactivates the specified target certificate for the supplicant. Syntax: deactivate_for_supplicant = target. Use target: CA, LOCAL or KEY. No certificate name is required. The certificate is not deleted, it is just not used anymore.	
	Action	Excecute command with parameter string max. 16 characters.
	OID	1.3.6.1.4.1.3181.10.6.3.72.6.1.9 (certificateDeactivateForSupplicant)

©2026 MICROSENS GmbH & Co. KG - Hamm/Germany - www.microsens.com

activate_for_snmp	Activates the specified certificate to become active for snmp v3 in TSM mode. Syntax: activate_for_snmp = AGENT certificate_name or activate_for_snmp = MANAGER certificate_name user_name. The user name must exist as a local user (See management.acess.user). Several user can be assigned to the same certificate. Expects an existing certificate file name and key file with same name. Enable TSM module in SNMP.v3_config.security_model. **Action** Excecute command with parameter string max. 128 characters. **OID** 1.3.6.1.4.1.3181.10.6.3.72.6.1.10 (certificateActivateForSnmp)
deactivate_for_snmp	Deactivates the specified target certificate for snmp v3. Syntax: deactivate_for_snmp = AGENT or deactivate_for_snmp = MANAGER certificate_name username. The username is optional. When omitted, then all user assigned to the specified MANAGER certicate are deactivated. The certificate is not deleted, it is just not used anymore. **Action** Excecute command with parameter string max. 128 characters. **OID** 1.3.6.1.4.1.3181.10.6.3.72.6.1.11 (certificateDeactivateForSnmp)
view_active_certificates	Displays the content of all currently active certificates. **Action** Excecute command. **OID** 1.3.6.1.4.1.3181.10.6.3.72.6.1.12 (certificateViewActiveCertificates)

Group	**license**
Path	Management.Files.license
Description	This section defines commands install, active and check software licensing files.
list_files	Displays a list of all licenses installed. **Action** Excecute command. **OID** 1.3.6.1.4.1.3181.10.6.3.72.7.1.2 (licenseListFiles)
show_file	Displays the content of a selected license file. License files are human readable. Be aware that any manual change to then will invalidate the signature. **Action** Excecute command with parameter string max. 128 characters. **OID** 1.3.6.1.4.1.3181.10.6.3.72.7.1.3 (licenseShowFile)

©2026 MICROSENS GmbH & Co. KG - Hamm/Germany - www.microsens.com

download_from_server	License files can be downloaded. Various protocols may be used. Example: download_from_server = ftp://name:passwd@machine.domain:port/full/path/to/certificatefile. A possible local file with same name is overwritten. Type = without parameter for additional online help. **Action** Excecute command with parameter string max. 128 characters. **OID** 1.3.6.1.4.1.3181.10.6.3.72.7.1.4 (licenseDownloadFromServer)
delete_file	Deletes an individual license file. The full name must be specified. **Action** Excecute command with parameter string max. 128 characters. **OID** 1.3.6.1.4.1.3181.10.6.3.72.7.1.5 (licenseDeleteFile)
activate	Activates all available licenses to become active immediately. No parameter are required. Licenses are also activated upon system start. **Action** Excecute command. **OID** 1.3.6.1.4.1.3181.10.6.3.72.7.1.6 (licenseActivate)
view_active_licenses	Displays a summary of all licenses and their expiration dates. **Action** Excecute command. **OID** 1.3.6.1.4.1.3181.10.6.3.72.7.1.7 (licenseViewActiveLicenses)

Group	**history**
Path	Management.Files.history
Description	This section defines commands to access the history files created of history logging is enabled. The files are also accessible via ftp in the history directory.

list_files	Displays a list of all available history files. **Action** Excecute command. **OID** 1.3.6.1.4.1.3181.10.6.3.72.8.1.2 (historyListFiles)
show_file	Displays the content of a history file. The files cannot not be edited via CLI or the embedded editor within the CLI. **Action** Excecute command with parameter string max. 128 characters. **OID** 1.3.6.1.4.1.3181.10.6.3.72.8.1.3 (historyShowFile)

©2026 MICROSENS GmbH & Co. KG - Hamm/Germany - www.microsens.com

upload_to_server	A script data file can be uploaded. Various protocols may be used. Example: upload_to_server = file ftp://user:passwd@ftp.upload.com/ Type = without parameter for additional online help. **Action** Excecute command with parameter string max. 128 characters. **OID** 1.3.6.1.4.1.3181.10.6.3.72.8.1.4 (historyUploadToServer)
copy_file	Copies an existing history data file to another file. Example: copy_file = history_file backup_name. Do not use whitespace in the new file name. **Action** Excecute command with parameter string max. 128 characters. **OID** 1.3.6.1.4.1.3181.10.6.3.72.8.1.5 (historyCopyFile)
delete_file	Deletes a history file. When a file is deleted, which is still updated by the history process, then a new file started as soon as the next history update cycle starts. **Action** Excecute command with parameter string max. 128 characters. **OID** 1.3.6.1.4.1.3181.10.6.3.72.8.1.6 (historyDeleteFile)
list_media_files	Display a list of all history files available on the external media in the history folder. **Action** Excecute command. **OID** 1.3.6.1.4.1.3181.10.6.3.72.8.1.7 (historyListMediaFiles)
export_to_media	The function depends on the type of device. On devices with USB port this action copies to an inserted memory stick. On a micro switch running from internal memory this action copies to an optional DOS formatted SD card. On all other switch versions this action will do nothing. When applicable this action copies the specified history files onto the removable media. If a file already exists it is overwritten. Syntax: export_media = filename. Wildcard * may be used to select several files at once. Example: temperature_day_2017_11* to get all files of November. **Action** Excecute command with parameter string max. 128 characters. **OID** 1.3.6.1.4.1.3181.10.6.3.72.8.1.8 (historyExportToMedia)

Group	**logfiles**
Path	Management.Files.logfiles
Description	This section permits read access to various system log files. The files are also accessible via ftp in the logs directory.

list_files	Displays a list of all available log files. **Action** Excecute command. **OID** 1.3.6.1.4.1.3181.10.6.3.72.9.1.2 (logfilesListFiles)

©2026 MICROSENS GmbH & Co. KG - Hamm/Germany - www.microsens.com

show_file	Displays the content of a log file. The files cannot not be edited via CLI or the embedded editor within the CLI. **Action** Excecute command with parameter string max. 128 characters. **OID** 1.3.6.1.4.1.3181.10.6.3.72.9.1.3 (logfilesShowFile)
show_last_update_log	Displays the last firmware update logfile. **Action** Excecute command. **OID** 1.3.6.1.4.1.3181.10.6.3.72.9.1.4 (logfilesShowLastUpdateLog)
upload_last_snapshot	A system snapshot contains all data required for comprehensive offsite troubleshooting. A snapshot can be created under Device.system.create_snapshot. Use the upload command to send the result to a remote system. Example: upload_last_snapshot = ftp:// user:passwd@ftp.upload.com/ Type = without parameter for additional online help. **Action** Excecute command with parameter string max. 128 characters. **OID** 1.3.6.1.4.1.3181.10.6.3.72.9.1.5 (logfilesUploadLastSnapshot)
export_to_media	The function depends on the type of device. On devices with USB port this action copies to an inserted memory stick. On a micro switch running from internal memory this action copies to an optional DOS formatted SD card. On all other switch versions this action will do nothing. When applicable this action copies all log files onto the removable media. **Action** Excecute command. **OID** 1.3.6.1.4.1.3181.10.6.3.72.9.1.6 (logfilesExportToMedia)

Group	**server**
Path	Management.Files.server
Description	The different file transfer protocols may individually be enabled or disabled for protection.

enable_tftp	Enable TFTP server for file up-/download. **Values** enabled, disabled **OID** 1.3.6.1.4.1.3181.10.6.3.72.10.1.2 (serverEnableTftp)
enable_ftp	Enable FTP server for file up-/download. **Values** enabled, disabled **OID** 1.3.6.1.4.1.3181.10.6.3.72.10.1.3 (serverEnableFtp)

©2026 MICROSENS GmbH & Co. KG - Hamm/Germany - www.microsens.com

enable_sftp	Enable SFTP server for file up-/download. Note SFTP also requires SSH to be enabled (see CLI settings). TCP/IP Port 8022 is used. **Values** enabled, disabled **OID** 1.3.6.1.4.1.3181.10.6.3.72.10.1.4 (serverEnableSftp)
enable_api	Enable API server for dotstring management via https. **Values** enabled, disabled **OID** 1.3.6.1.4.1.3181.10.6.3.72.10.1.5 (serverEnableApi)
enable_rest	Enable REST api server for dotstring management via https. **Values** enabled, disabled **OID** 1.3.6.1.4.1.3181.10.6.3.72.10.1.6 (serverEnableRest)
enable_json_rpc	Enable JSON/RPC interface for M2M management via https. **Values** enabled, disabled **OID** 1.3.6.1.4.1.3181.10.6.3.72.10.1.7 (serverEnableJsonRpc)

©2026 MICROSENS GmbH & Co. KG - Hamm/Germany - www.microsens.com

10 Event Messages (Syslog, SNMP Notifications)

10.1 Key Features

Function

Syslog protocol for UDP/IPv4 and UDP/IPv6. Syslog messages are triggered by system events and can be sent to any number of Syslog servers.

Integrates with any support structure.

Syslog to CLI

The default syslog target is the CLI. A logged-in user receives Syslogs depending on the preset severness. The filter mechanism can be tailored.

Even without a syslog receiver Syslogs can be viewed on the CLI.

Local Logfile

All events, forwarded or not, are saved to a local logfile. This permits searching to past events to aid trouble shooting. Two logfiles are used in rotation to limit the used storage. The logfile may be uploaded via file transfer.

Access to the log files permit "post mortem" dump of sequence of events.

Log Filters

What is logged or forwarded as SNMP trap can be filtered independently for each log target destination. Please check Events section for details.

A special syslog target can be defined that logs for example only configuration changes.

Recent Logs

The recent logs table hold the last 15 events in reverse order. The lastets event at the top. This can be used in combination or instead of the instant event display in the CLI.

This is a convienience feature and also permits easy access to the latest events from within a script program.

Log to MQTT topic

Event messages can be forwarded as MQTT topics. Different format options apply. A fixed or a dynamic topic can be selected.

This can be used by other MQTT enabled devices to act on changes in the system. Suitable to IoT applications.

Long Term History

Up to 15 arbitrary status parameter can be defined which will internally be sampled every second. The values are then accumulated the last minute, hour and day. In addition logfiles are written which permit backtracking the data monthly. The created csv files can be forwarded to a collection server for further processing in Excel or similar tools.

Long term historic data can for example be used to track PoE power consumption or bit errors over time.

©2026 MICROSENS GmbH & Co. KG - Hamm/Germany - www.microsens.com

10.2 Functional Description

10.2.1 Introduction

The logging section contains functions to forward events to other management entities by using various formats. An event is an information about a certain change which may be more or less important to know about. The logging may take place using Syslog or SNMP Notifications.

For each receiver the type of message and the minimum severity level of the event that triggers the message can be defined.

10.2.2 Events

Logging is tightly integrated with the Event scheme embedded in the product. Many functions inside the product are controlled using internal events. Many of those events may be exposed to the outside if so desired. Events are grouped and classified by severity and other criteria. The Logging functions include filters that determine, if an internal event meets the criteria to be forwarded to the outside.

See the section 'System Event Manager' of this document for more details on the configuration and handling of system events.

10.2.3 Targets

A single internal event may be forwarded to multiple target destinations. For each target individual forwarding criteria apply and also the output format can individually be set.

10.2.4 Syslog

A Syslog is essentially a readable text message that can be logged on an external server. The Syslog protocol is standardized and Syslog receivers, which can list, sort and store the event information are readily available for many platforms.

For each event type an individual Syslog message is predefined. See 'System Event Manager' section of this manual for further reference. The device supports two Syslog output formats, whereby the 'VERBOSE' output contains the alias names of the ports and the hostname for unit related events.

10.2.5 Traps

Most events may be forwarded as SNMP notification messages, called Traps or Informs. While Traps are one-way messages, Informs are acknowledged. The information is encapsulated in SNMP compliant IP frames destined for collection in a SNMP management station. In contrast to Syslog, SNMP is more structured and better suited for automatic evaluation by software.

The device supports several SNMP versions, SNMPv1, SNMPv2c or SNMPv3. Standard traps are defined in the public MIBs. Additional traps are defined in the private MIB.

SNMP output and Syslog can run in parallel. Also an unlimited number of trap destinations (targets) may be assigned. To verify which event may be forwarded as trap, please check the 'trap_map' parameter.

Example:

```
>>Management.Event.event_list[*].trap_map
[RESERVED].trap_map:
[REGISTER_EVENT_QUEUE].trap_map:
[TIMER].trap_map:
```

©2026 MICROSENS GmbH & Co. KG - Hamm/Germany - www.microsens.com

```
[DEBUG].trap_map:
[ALIVE_TEST].trap_map:
[FIRMWARE_UPDATE_OK].trap_map:
[FIRMWARE_UPDATE_FAIL].trap_map:
[LICENSE_VIOLATION].trap_map:
[COLDSTART].trap_map: 1
[WARMSTART].trap_map: 2
[FACTORY_RESET_LOADED].trap_map: 8
[FACTORY_RESET_DENIED].trap_map:
[CHANGE_CONFIG].trap_map: 0
[CHANGE_OFFLINE_CONFIG].trap_map:
[ACTION_RESPONSE].trap_map:
[POWER_SUPPLY_OK].trap_map: 14
[POWER_SUPPLY_FAIL].trap_map: 14
[LOGIN].trap_map: 0
[LOGOUT].trap_map: 0
[LOGIN_ATTEMPT].trap_map: 16
[LINK_UP].trap_map: 4,7
[LINK_DOWN].trap_map: 3,7
Hit q to quit or any key to continue..
```

When trap_map value is either blank (empty) or 0, then NO trap is possible.

10.2.6 Configuration Overview

All logging parameter can be found under the following tree sections:

```
Management.Logging.target[*].
Management.Logging.statistics.
```

Use the wildcard operator '*' to select multiple targets at once.

Example:

```
>>Management.Logging.target[*].
Parameter : [StdError] [local]
alias : StdError local
host_address : 192.168.214.1:514 local
log_type : SNMP_TRAP_V2C SYSLOG
minimum_severity : ERROR DEBUG
required_relevance : ANY ANY
required_source : ANY ANY
log_config_changes : Enabled Enabled
log_debug_events_only : Disabled Disabled
>>
```

INFO: *The default entry for logging writes to the local syslog log file. The keyword 'local' as host_address enabled this function.*

©2026 MICROSENS GmbH & Co. KG - Hamm/Germany - www.microsens.com

10.2.7 Adding a target

The target list is a dynamic table. To add a new target do the following:

- Type the dotstring and use any existing alias (or '*') .alias
- Then type '=' to edit.
- The CLI will write 'Add:'
- Continue with a unique name that identifies your log target.

```
Management.Logging.target[StdError].alias = Add: my log
```

10.2.8 Delete a target

To rename a target or to delete it (including its associated parameter) use the [Cursor Up/Down] keys.

```
Management.Logging.target[StdError].alias = Delete: StdError ?
```

Press [Return] to delete. There is no undo.

©2026 MICROSENS GmbH & Co. KG - Hamm/Germany - www.microsens.com

10.3 Logging CLI Command Reference

The following table lists all CLI commands applicable for this feature section. For each parameter, the access mode is given:

R = Read Only, R/W = Read/Write, X = Executable Action.

Please note that the effective access rights are dependent on the login level of the user.

Category	Group	Table	Parameter	Options	Access	Description
Management.						
	logging.					Logging is used to write event notifications to a server for collection. SYSLOG, SNMP traps or the CLI may be specifed as destinations. Additionally, local logfiles are written to the SD card. In addition status data can be specified to create long term history data.
			send_test_event		X	Creates an ALIVE_TEST event. This may be used to check out log functionality. The ALIVE_TEST bypasses all filter mechanisms and shall always come out.
			auto_discovery_beacon		R/W	When enabled, the system will send out ALIVE_TEST events at the specified interval. These may be used by a management system for auto discovery.
			log_file_storage		R/W	Select the storage type of the logfile. Writing to SD card protects the file against reboot but significantly increases SD card write cycles.
		target[DYNAMIC].				An unlimited number of syslog receivers may be specified.
			alias		R/W	Name of this syslog entry for reference.
			host_address		R/W	IP address or hostname to the syslog server or snmp manager. Leave empty for local targets such as CLI or recent logs buffer.
			log_type		R/W	Specifies the type of event forwarding to match the desired manager.
			ca_filename		R/W	Name of a file containing the PEM encoded trusted CA certificate files.Only used for log_type SYSLOG_TLS.
			detail_level		R/W	Permits setting the detail level of the logged information. For SMNP v1 the setting EXTENDED changes the trap OID to indicate the private trap OID. For Syslog the setting EXTENDED prepends a rfc3164 compliant header.
			message_format		R/W	Determines if custom message text is used. It may be desirable to use custom on the console but to use standard text in log files.
			trap_type		R/W	Decides whether public or private traps are used. This parameter only applies then a SNMP log_type is selected.

©2026 MICROSENS GmbH & Co. KG - Hamm/Germany - www.microsens.com

	trap_community	R/W	For SNMP v1/v2c this parameter may be used to help receiving manager filtering out unwanted traps. For logtype=SYSLOG a decimal number may be defined for a custom facility number. When empty or a string is defined, the default facility 1 (user) is used.
	snmp_v3_username	R/W	When SNMP v3 is used this name is associated with a user under Mangement.access.user.name of the same name. The SNMP security level and passwords are taken from this user. For non SNMP logs this parameter has no effect.
	minimum_severity	R/W	Only events with the defined severeness or worse are forwarded.
	required_relevance	R/W	Forward any event or only negative ones.
	required_source	R/W	Forward any event or only port or unit related events.
	log_config_changes	R/W	When enabled configuration changes are logged regardless of relevance or source. When disabled no config changes are logged.
	log_debug_events_only	R/W	When enabled debugging events with a minimum severity are logged. Other events are suppressed! When disabled no debugging events are logged.
history_config[DYNAMIC].			Up to 15 distinct values may be polled and saved to create a value history.
	name	R/W	Name of this chart
	record_mode	R/W	Defines in which way the history data are recorded.
	history_file_mode	R/W	When set, the recorded data points will be saved to flash memory. The files can be accessed in the ftp history folder or using commands under Management.files.history.
	dotstring	R/W	CLI compliant dotstring (command line) that will be executed in order to obtain the data to record. Alternatively, a persistent variable may be monitored. Syntax: $varname
	precision	R/W	Determines the precision with which the data are stored. Use NORMAL when the data should be unchanged. Note that only integer values are stored.
	restart	X	Clear all historic data (in RAM) and start from now on again. Only this selected dotstring is affected. History files are NOT affected.
statistics.			These statistics indicate about the operation of the logging process.
	number_of_targets	R	Indicates who many recipients exist for an event. This includes local log file when selected.
	logfile_counter	R	All logs written in the internal logfile system are counted here.
	syslog_counter	R	All logs to any target are counted here.

©2026 MICROSENS GmbH & Co. KG - Hamm/Germany - www.microsens.com

	syslog_error_counter	R	All logs to any target that failed are counted here.
	last_syslog_response	R	This contains a copy of the last syslog response for trouble shooting.
	trap_counter	R	All traps to any target are counted here.
	trap_error_counter	R	All traps to any target that failed are counted here.
	active_logfile_index	R	Indicates which of the alternating logfiles is currently selected and contains the recent logs.
	logfile_1_size	R	Indicates the size of the internal local log file 1 in bytes.
	logfile_2_size	R	Indicates the size of the internal local log file 2 in bytes.
recent_logs[20].			This table displays the last 15 log events ordered from latest to oldest.
	time_stamp	R	Updated whenever the entry is updated.
	severity	R	Indicates the severeness of the event.
	source	R	Indicates unit or port id of originating event source.
	message	R	This contains a copy of the last syslog message
history_records[15].			Displays historic values accumulated over time. These data may be used to plot graphs or to detect trends.
	name	R	Reflects the name of the related history_config entry.
	state	R	Indicates if this record displays a currently running script or a history entry of a previously running script which has ended by now.
	used_precision	R	Indicates the precision with which the data were stored.
	last_value	R	This value is updated every second with the latest polled value.
	average_last_minute	R	This value is updated every second but averages over the last minute.
	average_last_hour	R	This value is updated every minute but averages over the last hour.
	last_minute	R	Comma separated list with one value per every second starting at second 00. 60 values are recorded. Successive commas with no content in between indicate time positions for which no data are available.
	last_hour	R	Comma separated list with one value per minute, starting at minute 00. 60 values are recorded. Successive commas with no content in between indicate time positions for which no data are yet available. Every hour the daily file gets one line appended. Every day a new file is created.

©2026 MICROSENS GmbH & Co. KG - Hamm/Germany - www.microsens.com

last_day	R	Comma separated list with one value per every 15 minutes, starting at hour 00. 96 values are recorded. Successive commas with no content in between indicate time positions for which no data are yet available. Every day at midnight the file gets one line appended with the current day. Every month a new file is started.
last_update	R	Indicates the time when this record was last updated.

©2026 MICROSENS GmbH & Co. KG - Hamm/Germany - www.microsens.com

10.4 Logging Configuration Parameters

Group	**General Parameters**
Path	Management.Logging

send_test_event

Creates an ALIVE_TEST event. This may be used to check out log functionality. The ALIVE_TEST bypasses all filter mechanisms and shall always come out.

- **Action**: Excecute command.
- **OID**: 1.3.6.1.4.1.3181.10.6.3.71.1 (loggingSendTestEvent)

auto_discovery_beacon

When enabled, the system will send out ALIVE_TEST events at the specified interval. These may be used by a management system for auto discovery.

- **Values**:
  - *DISABLED*: No ALIVE events will be generated automatically
  - *EVERY_10S*: ALIVE events are send every 10s for test purposes
  - *EVERY_MINUTE*: ALIVE events are send every 60s
  - *EVERY_5_MINUTES*: ALIVE events are send every 300s
  - *EVERY_15_MINUTES*: ALIVE events are send every 15 minutes
  - *EVERY_HOUR*: ALIVE events are send every 60 minutes
- **OID**: 1.3.6.1.4.1.3181.10.6.3.71.2 (loggingAutoDiscoveryBeacon)

log_file_storage

Select the storage type of the logfile. Writing to SD card protects the file against reboot but significantly increases SD card write cycles.

- **Values**:
  - *RAM_DISK*: Log is written on RAM disk. Log is lost on reboot
  - *SD_CARD*: Logfile is written to SD card. Data survive a reboot
- **OID**: 1.3.6.1.4.1.3181.10.6.3.71.3 (loggingLogFileStorage)

Group	**target**, dynamical size
Path	Management.Logging.target
Description	An unlimited number of syslog receivers may be specified.

alias

Name of this syslog entry for reference.

- **Value**: String, max. 32 characters.
- **OID**: 1.3.6.1.4.1.3181.10.6.3.71.4.1.2 (targetAlias)

©2026 MICROSENS GmbH & Co. KG - Hamm/Germany - www.microsens.com

host_address

IP address or hostname to the syslog server or snmp manager. Leave empty for local targets such as CLI or recent logs buffer.

Value String, max. 128 characters.

OID 1.3.6.1.4.1.3181.10.6.3.71.4.1.3 (targetHostAddress)

log_type

Specifies the type of event forwarding to match the desired manager.

Values

DISABLED	This logging entry is disabled
SYSLOG	The event will be forwarded as Syslog
SNMP_TRAP_V1	The event will be forwarded as SNMP trap using SNMP V1 format
SNMP_TRAP_V2C	The event will be forwarded as SNMP trap using SNMP V2c format
SNMP_TRAP_V3	The event will be forwarded as SNMP trap using SNMP V3 format
SNMP_INFORM_V2C	The event will be forwarded as SNMP trap using SNMP V2c acknowledged Inform format
SNMP_INFORM_V3	The event will be forwarded as SNMP trap using SNMP V3 acknowledged Inform format
DISPLAY_IN_CLI	The event will be shown to all currently open terminal sessions
RECENT_LOGS	The event will be stored in the recent_logs status ram
MQTT_FIXED_TOPIC	The event will be published as MQTT message with topic [topic_prefix]/event/log. MQTT must be properly configured to support this mode. The detail_level parameter can be used to affect the data payload.
MQTT_DYN_TOPIC	The event will be published as MQTT message with topic [topic_prefix]/event/[event_group]/[event_name]/([slot]/[port]) . MQTT must be properly configured to support this mode. The data will contain textual string like in CLI. Detail_level parameter apply.
SYSLOG_TLS	The event will be forwarded als TLS encrypted Syslog on port 6514

OID 1.3.6.1.4.1.3181.10.6.3.71.4.1.4 (targetLogType)

ca_filename

Name of a file containing the PEM encoded trusted CA certificate files.Only used for log_type SYSLOG_TLS.

Value String, max. 32 characters.

OID 1.3.6.1.4.1.3181.10.6.3.71.4.1.5 (targetCaFilename)

©2026 MICROSENS GmbH & Co. KG - Hamm/Germany - www.microsens.com

detail_level	Permits setting the detail level of the logged information. For SMNP v1 the setting EXTENDED changes the trap OID to indicate the private trap OID. For Syslog the setting EXTENDED prepends a rfc3164 compliant header. **Values** *CONCISE* CLI, Syslog and Trap only present the required fields. No alias names included. *VERBOSE* CLI, syslog and Traps also contain alias names for ports and the SysName for unit related messages. *EXTENDED* Like VERBOSE plus SNMP traps contain additional supporting OIDs, SYSLOG contains RFC 3264 header and CLI prepends a time stamp **OID** 1.3.6.1.4.1.3181.10.6.3.71.4.1.6 (targetDetailLevel)
message_format	Determines if custom message text is used. It may be desirable to use custom on the console but to use standard text in log files. **Values** *STANDARD* The event uses the standard syslog_message text *PREFER_CUSTOM* When a custom message is defined it will be used. Otherwise the standard text is used. *CUSTOM_ONLY* Event will use the custom message text. When no text is defined, no event is send at all! Thus this acts as filter as well. **OID** 1.3.6.1.4.1.3181.10.6.3.71.4.1.7 (targetMessageFormat)
trap_type	Decides whether public or private traps are used. This parameter only applies then a SNMP log_type is selected. **Values** *PUBLIC* Only sent public traps. Event for which no public trap exists are not generated *PREFER_PUBLIC* Send public traps if defined. Otherwise send a private trap *PRIVATE* Only sent private traps *BOTH* Send a private trap and a public trap, if defined, as well **OID** 1.3.6.1.4.1.3181.10.6.3.71.4.1.8 (targetTrapType)
trap_community	For SNMP v1/v2c this parameter may be used to help receiving manager filtering out unwanted traps. For logtype=SYSLOG a decimal number may be defined for a custom facility number. When empty or a string is defined, the default facility 1 (user) is used. **Value** String, max. 128 characters. **OID** 1.3.6.1.4.1.3181.10.6.3.71.4.1.9 (targetTrapCommunity)
snmp_v3_username	When SNMP v3 is used this name is associated with a user under Mangement.access.user.name of the same name. The SNMP security level and passwords are taken from this user. For non SNMP logs this parameter has no effect. **Value** String, max. 32 characters. **OID** 1.3.6.1.4.1.3181.10.6.3.71.4.1.10 (targetSnmpV3Username)

©2026 MICROSENS GmbH & Co. KG - Hamm/Germany - www.microsens.com

minimum_severity	Only events with the defined severeness or worse are forwarded. **Values** *DISABLED* Syslog output to this target is disabled *DEBUG* Internal system debugging information *INFO* Information with no important consequences *NOTICE* Notification about normal occurrence *WARNING* Warning about a normal problem *ERROR* Unexpected error has occurred *CRITICAL* Critical error which compromises data traffic or stability *ALERT* Very important error condition *EMERGENCY* Highest possible error condition (no set by this product) **OID** 1.3.6.1.4.1.3181.10.6.3.71.4.1.11 (targetMinimumSeverity)
required_relevance	Forward any event or only negative ones. **Values** *ANY* Log events with any relevance *NEG_ONLY* Log only negative events **OID** 1.3.6.1.4.1.3181.10.6.3.71.4.1.12 (targetRequiredRelevance)
required_source	Forward any event or only port or unit related events. **Values** *ANY* Log events regardless of source *PORT_ONLY* Logs only port related events *UNIT_ONLY* Logs only unit related events **OID** 1.3.6.1.4.1.3181.10.6.3.71.4.1.13 (targetRequiredSource)
log_config_changes	When enabled configuration changes are logged regardless of relevance or source. When disabled no config changes are logged. **Values** enabled, disabled **OID** 1.3.6.1.4.1.3181.10.6.3.71.4.1.14 (targetLogConfigChanges)
log_debug_events_only	When enabled debugging events with a minimum severity are logged. Other events are suppressed! When disabled no debugging events are logged. **Values** enabled, disabled **OID** 1.3.6.1.4.1.3181.10.6.3.71.4.1.15 (targetLogDebugEventsOnly)

Group	**history_config**, dynamical size
Path	Management.Logging.history_config
Description	Up to 15 distinct values may be polled and saved to create a value history.

©2026 MICROSENS GmbH & Co. KG - Hamm/Germany - www.microsens.com

name	Name of this chart		
	Value	String, max. 31 characters.	
	OID	1.3.6.1.4.1.3181.10.6.3.71.5.1.2 (historyConfigName)	
record_mode	Defines in which way the history data are recorded.		
	Values	*DISABLED*	When disabled, no data are evaluated and stored
		ENABLED	Data are inserted into result string in a fixed position. Position 1 is 00:00, Position 2 is 00:01, etc.
	OID	1.3.6.1.4.1.3181.10.6.3.71.5.1.3 (historyConfigRecordMode)	
history_file_mode	When set, the recorded data points will be saved to flash memory. The files can be accessed in the ftp history folder or using commands under Management.files.history.		
	Values	*DISABLED*	When disabled, no files are created for this record
		HOURLY	The last_hour table, with its minutely granularity, is appended to the file of the day. Every day a new file is created and updated hourly.
		DAILY	The last_day table, with its 15 minutes granularity, is appended to the file of the month. Every month a new file is created and updated daily.
	OID	1.3.6.1.4.1.3181.10.6.3.71.5.1.4 (historyConfigHistoryFileMode)	
dotstring	CLI compliant dotstring (command line) that will be executed in order to obtain the data to record. Alternatively, a persistent variable may be monitored. Syntax: $varname		
	Value	String, max. 128 characters.	
	OID	1.3.6.1.4.1.3181.10.6.3.71.5.1.5 (historyConfigDotstring)	
precision	Determines the precision with which the data are stored. Use NORMAL when the data should be unchanged. Note that only integer values are stored.		
	Values	*NORMAL*	Observed value remains unchanged, result is logged as integer
		TENFOLD	Observed value is multiplied with 10, result is logged as integer
		HUNDREDFOLD	Observed value is multiplied with 100, result is logged as integer
		THOUSANDFOLD	Observed value is multiplied with 1000, result is logged as integer
		TENTH	Observed value is divided with 10, result is logged as integer
		HUNDREDTH	Observed value is divided with 100, result is logged as integer
		THOUSANDTH	Observed value is divided with 1000, result is logged as integer
	OID	1.3.6.1.4.1.3181.10.6.3.71.5.1.6 (historyConfigPrecision)	
restart	Clear all historic data (in RAM) and start from now on again. Only this selected dotstring is affected. History files are NOT affected.		
	Action	Excecute command.	
	OID	1.3.6.1.4.1.3181.10.6.3.71.5.1.7 (historyConfigRestart)	

©2026 MICROSENS GmbH & Co. KG - Hamm/Germany - www.microsens.com

©2026 MICROSENS GmbH & Co. KG - Hamm/Germany - www.microsens.com

10.5 Logging Status Parameters

Group	**statistics**
Path	Management.Logging.statistics
Description	These statistics indicate about the operation of the logging process.

number_of_targets	Indicates who many recipients exist for an event. This includes local log file when selected.	
	Value	Number in range 0-0xFFFFFFFF
	OID	1.3.6.1.4.1.3181.10.6.3.71.100.1.2 (statisticsNumberOfTargets)
logfile_counter	All logs written in the internal logfile system are counted here.	
	Value	Number in range 0-0xFFFFFFFF
	OID	1.3.6.1.4.1.3181.10.6.3.71.100.1.3 (statisticsLogfileCounter)
syslog_counter	All logs to any target are counted here.	
	Value	Number in range 0-0xFFFFFFFF
	OID	1.3.6.1.4.1.3181.10.6.3.71.100.1.4 (statisticsSyslogCounter)
syslog_error_counter	All logs to any target that failed are counted here.	
	Value	Number in range 0-0xFFFFFFFF
	OID	1.3.6.1.4.1.3181.10.6.3.71.100.1.5 (statisticsSyslogErrorCounter)
last_syslog_response	This contains a copy of the last syslog response for trouble shooting.	
	Value	String, max. 256 characters.
	OID	1.3.6.1.4.1.3181.10.6.3.71.100.1.6 (statisticsLastSyslogResponse)
trap_counter	All traps to any target are counted here.	
	Value	Number in range 0-0xFFFFFFFF
	OID	1.3.6.1.4.1.3181.10.6.3.71.100.1.7 (statisticsTrapCounter)

©2026 MICROSENS GmbH & Co. KG - Hamm/Germany - www.microsens.com

trap_error_counter	All traps to any target that failed are counted here. **Value** Number in range 0-0xFFFFFFFF **OID** 1.3.6.1.4.1.3181.10.6.3.71.100.1.8 (statisticsTrapErrorCounter)
active_logfile_index	Indicates which of the alternating logfiles is currently selected and contains the recent logs. **Value** Number in range 0-0xFFFFFFFF **OID** 1.3.6.1.4.1.3181.10.6.3.71.100.1.9 (statisticsActiveLogfileIndex)
logfile_1_size	Indicates the size of the internal local log file 1 in bytes. **Value** Number in range 0-0xFFFFFFFF **OID** 1.3.6.1.4.1.3181.10.6.3.71.100.1.10 (statisticsLogfile1Size)
logfile_2_size	Indicates the size of the internal local log file 2 in bytes. **Value** Number in range 0-0xFFFFFFFF **OID** 1.3.6.1.4.1.3181.10.6.3.71.100.1.11 (statisticsLogfile2Size)

©2026 MICROSENS GmbH & Co. KG - Hamm/Germany - www.microsens.com

11 System Event Manager

11.1 Key Features

Event Scheme

The device internally makes extensive use of interprocess messaging. Many of these message events can be made public as Syslogs or private traps to provide insight into the internal proceedings.

Customizable events

Event severeness and alert level is freely configurable for each event. Event text strings may be customized via user interface.

Events could be translated to local language for example.

Configuration Changes

Each time any parameter is changed via any of the user interfaces, each individual change is recorded with time stamp, operator name, user interface, old and new value. These changes may trigger Syslogs or even traps.

It possible to clearly back track configuration changes if needed.

Debug Information

It is possible to turn internal debug messages into events which can be forwarded like any other event. Thus it is possible to enable remote debugging. Note: developer/support only. These functions are protected by customers access scheme and do not pose a security breach.

Advanced debug support may help trouble shooting difficult applications problems remotely.

Run Scripts on Event

Individual automated and programmed scripts can be attached to each event. This permits custom processes run on occurance of event.

Permits creation of event based custom functions. This enables powerful extensions to standard functionality.

11.2 Functional Description

11.2.1 System Event Control

Status changes on the device result in event messages, that can be used to control internal handling and processing of the event.

©2026 MICROSENS GmbH & Co. KG - Hamm/Germany - www.microsens.com

11.3 Event CLI Command Reference

The following table lists all CLI commands applicable for this feature section. For each parameter, the access mode is given:

R = Read Only, R/W = Read/Write, X = Executable Action.

Please note that the effective access rights are dependent on the login level of the user.

Category	Group	Table	Parameter	Options	Access	Description
Management.						
	event.					Event definitions for traps, syslogs, logfiles, etc.
		event_list[DYNAMIC].				
			name		R	Name of the event
			group		R	Associated group of this event
			relevance		R	Positive, negative or informational event
			internal		R	If enabled this event cannot be used for syslog or traps
			severity		R/W	Severity level of this event. Can be modified if required
			source		R	Unit or port related event
			trap		R/W	When enabled a trap may be generated for this event
			syslog_message		R	Fixed event text describing the cause of the event.
			custom_message		R/W	Here a custom or translated version of the event text may be inserted.
			integer_elements		R	Lists which integer value informations are available for the syslog message
			string_elements		R	Lists which string type informations are available for the syslog message
			cli_script		R/W	When a script name is present the script will be executed whenever this event occurs. Note: Internal events do not trigger scripts even though a script name may be entered. Several scripts may be assigned to a single event. Syntax: app/ scriptfile:subroutine para1 para2, next script... All fields besides the scriptfile are optional.
		statistics.				This section provides statistical information about the internal event system.
			num_main_q_events		R	Counts every processed event
			num_lost_main_q_events		R	Counts every event that could not be written into master queue.

last_lost_main_q_event	R	Event_id of the last event lost by the master queue.
last_lost_main_src_id	R	Sender_code_id of the last event lost by the master queue.
num_lost_appl_q_events	R	Counts every event that could not be written into any application queue. Thus a single event may counted several times if not deliverable to several queues.
last_lost_appl_q_event	R	Event_id of the last event lost by any application queue.
last_lost_appl_src_id	R	Sender_code_id of the last event lost by the master queue.
last_lost_appl_q_id	R	Queue id of the queue at which the last event loss occured.
uptime_at_last_loss	R	System uptime while the last counted event loss occured.

©2026 MICROSENS GmbH & Co. KG - Hamm/Germany - www.microsens.com

11.4 Event Configuration Parameters

Group	**event_list**, dynamical size
Path	Management.Event.event_list
Description	

name

Name of the event

Value	String, max. 32 characters.
OID	1.3.6.1.4.1.3181.10.6.3.70.1.1.2 (eventListName)

group

Associated group of this event

Values

INTERNAL	Internal events not for customer use
DEBUG	Internal debugging related event
TEST	Test group
RESET	Reset related events
FIRMWARE	Firmware load related events
SYSTEM	System error events
CONFIG	Configuration change events
LOGIN	Login related events
AUTH	Authentication related events
POWER	Power supply related events
TEMPERATURE	Operating temperature related events
LINK	Data link related events
SFP	SFP related events
POE	PoE related events
RING	Ring protocol related events
NTP	NTP related events
SIGNALS	IO signal pins
SCRIPT	CLI scripting events
FILTER	Packet filter related events
LACP	Link Aggregation Control Protocol
APP	APP installation
CABLE	Virtual Cable Tester
SECURITY	Network security related events
MSP1000	MSP1000 system related events
BACKUP	Backup data path events
FAN	Cooling fan related events
MESSAGING	From extern received alarm messages
TERMINAL_SERVER	Terminal server events
SMART_OFFICE	SmartOffice internal events

OID 1.3.6.1.4.1.3181.10.6.3.70.1.1.3 (eventListGroup)

©2026 MICROSENS GmbH & Co. KG - Hamm/Germany - www.microsens.com

relevance	Positive, negative or informational event	
	Values	*POS* Identifies a positive event
		NEG Identifies a negative event
		INFO Identifies an informational event
	OID	1.3.6.1.4.1.3181.10.6.3.70.1.1.4 (eventListRelevance)
internal	If enabled this event cannot be used for syslog or traps	
	Values	enabled, disabled
	OID	1.3.6.1.4.1.3181.10.6.3.70.1.1.5 (eventListInternal)
severity	Severity level of this event. Can be modified if required	
	Values	*DISABLED* No Output
		DEBUG Internal system debugging information
		INFO Information with no important consequences
		NOTICE Notification about normal occurrence
		WARNING Warning about a normal problem
		ERROR Unexpected error has occurred
		CRITICAL Critical error which compromises data traffic or stability
		ALERT Very important error condition
		EMERGENCY Highest possible error condition (no set by this product)
	OID	1.3.6.1.4.1.3181.10.6.3.70.1.1.6 (eventListSeverity)
source	Unit or port related event	
	Values	*UNIT* Unit related event
		PORT Port related event
	OID	1.3.6.1.4.1.3181.10.6.3.70.1.1.7 (eventListSource)
trap	When enabled a trap may be generated for this event	
	Values	enabled, disabled
	OID	1.3.6.1.4.1.3181.10.6.3.70.1.1.8 (eventListTrap)
syslog_message	Fixed event text describing the cause of the event.	
	Value	String, max. 512 characters.
	OID	1.3.6.1.4.1.3181.10.6.3.70.1.1.9 (eventListSyslogMessage)
custom_message	Here a custom or translated version of the event text may be inserted.	
	Value	String, max. 512 characters.
	OID	1.3.6.1.4.1.3181.10.6.3.70.1.1.10 (eventListCustomMessage)

©2026 MICROSENS GmbH & Co. KG - Hamm/Germany - www.microsens.com

integer_elements	Lists which integer value informations are available for the syslog message	
	Value	String, max. 32 characters.
	OID	1.3.6.1.4.1.3181.10.6.3.70.1.1.11 (eventListIntegerElements)
string_elements	Lists which string type informations are available for the syslog message	
	Value	String, max. 32 characters.
	OID	1.3.6.1.4.1.3181.10.6.3.70.1.1.12 (eventListStringElements)
cli_script	When a script name is present the script will be executed whenever this event occurs. Note: Internal events do not trigger scripts even though a script name may be entered. Several scripts may be assigned to a single event. Syntax: app/scriptfile:subroutine para1 para2, next script... All fields besides the scriptfile are optional.	
	Value	String, max. 512 characters.
	OID	1.3.6.1.4.1.3181.10.6.3.70.1.1.13 (eventListCliScript)

©2026 MICROSENS GmbH & Co. KG - Hamm/Germany - www.microsens.com

11.5 Event Status Parameters

Group	**statistics**
Path	Management.Event.statistics
Description	This section provides statistical information about the internal event system.

num_main_q_events	Counts every processed event	
	Value	Number in range 0-0xFFFFFFFF
	OID	1.3.6.1.4.1.3181.10.6.3.70.100.1.2 (statisticsNumMainQEvents)
num_lost_main_q_events	Counts every event that could not be written into master queue.	
	Value	Number in range 0-0xFFFFFFFF
	OID	1.3.6.1.4.1.3181.10.6.3.70.100.1.3 (statisticsNumLostMainQEvents)
last_lost_main_q_event	Event_id of the last event lost by the master queue.	
	Value	Number in range 0-0xFFFFFFFF
	OID	1.3.6.1.4.1.3181.10.6.3.70.100.1.4 (statisticsLastLostMainQEvent)
last_lost_main_src_id	Sender_code_id of the last event lost by the master queue.	
	Value	Number in range 0-0xFFFFFFFF
	OID	1.3.6.1.4.1.3181.10.6.3.70.100.1.5 (statisticsLastLostMainSrcId)
num_lost_appl_q_events	Counts every event that could not be written into any application queue. Thus a single event may counted several times if not deliverable to several queues.	
	Value	Number in range 0-0xFFFFFFFF
	OID	1.3.6.1.4.1.3181.10.6.3.70.100.1.6 (statisticsNumLostApplQEvents)
last_lost_appl_q_event	Event_id of the last event lost by any application queue.	
	Value	Number in range 0-0xFFFFFFFF
	OID	1.3.6.1.4.1.3181.10.6.3.70.100.1.7 (statisticsLastLostApplQEvent)
last_lost_appl_src_id	Sender_code_id of the last event lost by the master queue.	
	Value	Number in range 0-0xFFFFFFFF
	OID	1.3.6.1.4.1.3181.10.6.3.70.100.1.8 (statisticsLastLostApplSrcId)

©2026 MICROSENS GmbH & Co. KG - Hamm/Germany - www.microsens.com

last_lost_appl_q_id	Queue id of the queue at which the last event loss occured.	
	Value	Number in range 0-0xFFFFFFFF
	OID	1.3.6.1.4.1.3181.10.6.3.70.100.1.9 (statisticsLastLostApplQId)
uptime_at_last_loss	System uptime while the last counted event loss occured.	
	Value	PERIOD0-0xFFFFFFFF
	OID	1.3.6.1.4.1.3181.10.6.3.70.100.1.10 (statisticsUptimeAtLastLoss)

©2026 MICROSENS GmbH & Co. KG - Hamm/Germany - www.microsens.com

12 Miscellaneous

12.1 Key Features

Terminal Server

The serial port can be used to connect a foreign device. This device can than be reached via Telnet or SSH session. Also serial to serial connections via an IP network are supported. The serial port can also be reached via a PC-COM port emulation.

This saves customer a separate converter when a legacy device is to be controlled.

Loudspeaker support

Audio files (wav, mp3) and network audio streams can be streamed to external IP loudspeaker. Play function can be scripted and associated to selected events.

Alarm conditions can be made audible or network music streams can be played in an SmartOffice application.

12.2 Functional Description

Miscellaneous

Miscellaneous network management related parameter.

©2026 MICROSENS GmbH & Co. KG - Hamm/Germany - www.microsens.com

12.3 Misc CLI Command Reference

The following table lists all CLI commands applicable for this feature section. For each parameter, the access mode is given:

R = Read Only, R/W = Read/Write, X = Executable Action.

Please note that the effective access rights are dependent on the login level of the user.

Category	Group	Table	ParameterOptions	Access	Description
Management.					
	misc.				Miscellaneous network management related parameter
		terminal_server_config.			This section defines setting for the terminal server feature.
			device_name	R/W	Descriptive name for customer reference. This name is echoed upon login.
			mode	R/W	Defines the operational mode of the terminal server.
			remote_ip	R/W	IP address of the associated remote partner. Only applies in CLIENT and COM_PORT mode.
			tcp_port	R/W	Defines the TCP port number under which the terminal server is reachable.
			inactivity_timeout	R/W	An unattended terminal server logs off automatically after specified seconds. Use 0 to disable timeout.
			data_rate	R/W	Data rate in bits per second.
			databits	R/W	Number of data bits per character.
			parity	R/W	Defines if the parity bit is used.
			stop_bits	R/W	Number of stop bits per character.
			flow_control	R/W	Determines if flow control is used.
			forwarding_timer	R/W	Defined in 100ms steps. After no more data are received for this time, the serial data are forwarded to the Ethernet side. (VTIME)
			character_count	R/W	At least this many character must be received before data are forwarded. Set to zero to ignore count. (VMIN)
			forwarding_character	R/W	When the specified character is received o the serial port, the TCP packet is forwarded.

©2026 MICROSENS GmbH & Co. KG - Hamm/Germany - www.microsens.com

speaker_config.			This section defines settings for an optional network addressed loudspeaker. Wav or mps3 files may be played out. Local sound files or network music files can be accessed. Not that WAV files must be provided in the format as required by the selected source. With mp3 on-the-fly transcoding is available.
	play	X	Play a sound file or stream. A local should file must reside in the sound folder accessible via ftp. Syntax: .play = mysound.mp3 Alternatively a remote file or stream may be played in the format: .play = http://webradiostream.mp3
	stop	X	Cancels all sound output.
	volume	X	Volume control if possible for this device.
	device_name	R/W	Descriptive name for customer reference.
	device_type	R/W	Select type or protocol of desired speaker.
	output_rate	R/W	Output (re)sample rate only applies to MP3 files or streams. Default value 44100.
	output_format	R/W	Mono Stereo conversion only applies to mp3 files or streams.
	host_address	R/W	IP address or symbolic name of the speaker
	udp_port	R/W	UDP port for

©2026 MICROSENS GmbH & Co. KG - Hamm/Germany - www.microsens.com

12.4 Misc Configuration Parameters

Group	**terminal_server_config**
Path	Management.Misc.terminal_server_config
Description	This section defines setting for the terminal server feature.

device_name

Descriptive name for customer reference. This name is echoed upon login.

- **Value**: String, max. 128 characters.
- **OID**: 1.3.6.1.4.1.3181.10.6.3.78.1.1.2 (terminalServerConfigDeviceName)

mode

Defines the operational mode of the terminal server.

- **Values**:
  - *SERVER* — Use this mode when putty is used to connect to local serial port
  - *CLIENT* — Use this mode for serial port to serial port forwarding. One side must be client
  - *COM_PORT* — Use when PC with COM port emulation is used
- **OID**: 1.3.6.1.4.1.3181.10.6.3.78.1.1.3 (terminalServerConfigMode)

remote_ip

IP address of the associated remote partner. Only applies in CLIENT and COM_PORT mode.

- **Format**: IPv4 Address
  ddd.ddd.ddd.ddd
  (*ddd* = decimal number between 000 to 255)
- **OID**: 1.3.6.1.4.1.3181.10.6.3.78.1.1.4 (terminalServerConfigRemoteIp)

tcp_port

Defines the TCP port number under which the terminal server is reachable.

- **Value**: Number in range 1000-65535
- **OID**: 1.3.6.1.4.1.3181.10.6.3.78.1.1.5 (terminalServerConfigTcpPort)

inactivity_timeout

An unattended terminal server logs off automatically after specified seconds. Use 0 to disable timeout.

- **Value**: Number in range 0-10000
- **OID**: 1.3.6.1.4.1.3181.10.6.3.78.1.1.6 (terminalServerConfigInactivityTimeout)

©2026 MICROSENS GmbH & Co. KG - Hamm/Germany - www.microsens.com

data_rate	Data rate in bits per second.		
	Values	*300*	300 bit/s
		600	600 bit/s
		1200	1200 bit/s
		2400	2400 bit/s
		4800	4800 bit/s
		9600	9600 bit/s
		19200	19200 bit/s
		38400	38400 bit/s
		57600	57600 bit/s
		115200	115200 bit/s
		230400	230400 bit/s
	OID	1.3.6.1.4.1.3181.10.6.3.78.1.1.7 (terminalServerConfigDataRate)	
databits	Number of data bits per character.		
	Values	*7_BIT*	7 bits per character
		8_BIT	8 bits per character
	OID	1.3.6.1.4.1.3181.10.6.3.78.1.1.8 (terminalServerConfigDatabits)	
parity	Defines if the parity bit is used.		
	Values	*NONE*	No parity bit
		ODD	Odd parity
		EVEN	Even parity
		MARK	Parity bit is always high
		SPACE	Parity bit is always low
	OID	1.3.6.1.4.1.3181.10.6.3.78.1.1.9 (terminalServerConfigParity)	
stop_bits	Number of stop bits per character.		
	Values	*1_BIT*	1 stop bit
		2_BITS	2 stop bits
	OID	1.3.6.1.4.1.3181.10.6.3.78.1.1.10 (terminalServerConfigStopBits)	
flow_control	Determines if flow control is used.		
	Values	*NONE*	No flow control at all
		LOCAL_XON_XOFF	Xon/Xoff is locally processed and buffering takes place within the switch
		PASS_XON_XOFF	Xon/Xoff is passed through to serial device and must be processed there
	OID	1.3.6.1.4.1.3181.10.6.3.78.1.1.11 (terminalServerConfigFlowControl)	

©2026 MICROSENS GmbH & Co. KG - Hamm/Germany - www.microsens.com

forwarding_timer	Defined in 100ms steps. After no more data are received for this time, the serial data are forwarded to the Ethernet side. (VTIME) **Value** Number in range 0-600 **OID** 1.3.6.1.4.1.3181.10.6.3.78.1.1.12 (terminalServerConfigForwardingTimer)
character_count	At least this many character must be received before data are forwarded. Set to zero to ignore count. (VMIN) **Value** Number in range 0-10000 **OID** 1.3.6.1.4.1.3181.10.6.3.78.1.1.13 (terminalServerConfigCharacterCount)
forwarding_character	When the specified character is received o the serial port, the TCP packet is forwarded. **Values** *NONE* No special character handling for data forwarding *CR* When a carriage return is received serially, the TCP packet is forwarded *LF* When a line feed is received serially, the TCP packet is forwarded **OID** 1.3.6.1.4.1.3181.10.6.3.78.1.1.14 (terminalServerConfigForwardingCharacter)

Group	**speaker_config**
Path	Management.Misc.speaker_config
Description	This section defines settings for an optional network addressed loudspeaker. Wav or mps3 files may be played out. Local sound files or network music files can be accessed. Not that WAV files must be provided in the format as required by the selected source. With mp3 on-the-fly transcoding is available.

play	Play a sound file or stream. A local should file must reside in the sound folder accessible via ftp. Syntax: .play = mysound.mp3 Alternatively a remote file or stream may be played in the format: .play = http://webradiostream.mp3 **Action** Excecute command with parameter string max. 128 characters. **OID** 1.3.6.1.4.1.3181.10.6.3.78.2.1.2 (speakerConfigPlay)
stop	Cancels all sound output. **Action** Excecute command. **OID** 1.3.6.1.4.1.3181.10.6.3.78.2.1.3 (speakerConfigStop)
volume	Volume control if possible for this device. **Action** Excecute command with parameter string max. 8 characters. **OID** 1.3.6.1.4.1.3181.10.6.3.78.2.1.4 (speakerConfigVolume)

©2026 MICROSENS GmbH & Co. KG - Hamm/Germany - www.microsens.com

device_name	Descriptive name for customer reference.		
	Value	String, max. 128 characters.	
	OID	1.3.6.1.4.1.3181.10.6.3.78.2.1.5 (speakerConfigDeviceName)	
device_type	Select type or protocol of desired speaker.		
	Values	*GENERIC_RTP*	Generic RTP compatible speaker
		SMARTAUDIO_CONTROLLER	SmartAudio Controller
	OID	1.3.6.1.4.1.3181.10.6.3.78.2.1.6 (speakerConfigDeviceType)	
output_rate	Output (re)sample rate only applies to MP3 files or streams. Default value 44100.		
	Value	Number in range 8000-400000	
	OID	1.3.6.1.4.1.3181.10.6.3.78.2.1.7 (speakerConfigOutputRate)	
output_format	Mono Stereo conversion only applies to mp3 files or streams.		
	Values	*MONO*	Stereo source data will be converted to mono
		STEREO	Stereo output with a stereo source
	OID	1.3.6.1.4.1.3181.10.6.3.78.2.1.8 (speakerConfigOutputFormat)	
host_address	IP address or symbolic name of the speaker		
	Value	String, max. 128 characters.	
	OID	1.3.6.1.4.1.3181.10.6.3.78.2.1.9 (speakerConfigHostAddress)	
udp_port	UDP port for		
	Value	Number in range 0-65535	
	OID	1.3.6.1.4.1.3181.10.6.3.78.2.1.10 (speakerConfigUdpPort)	

©2026 MICROSENS GmbH & Co. KG - Hamm/Germany - www.microsens.com

13 Factory Information

13.1 Key Features

Inventory and Factory information

Each device carries permanent information about its identity. This includes serial number, production codes, MAC address and a feature summary. These data are not located on the removable SD card.

This ensures that unit identity is locked to the physical hardware and not to the SD card.

Custom Device Info

Permanent hardware coupled custom information string which may be used for inventory or location info. This information persists even when the SD card is exchanged. Custom data may be entered by the customer or devices can be ordered individually preset from factory according to customer request.

This custom data may be preset in the factory according to customer request or can later be written by customer.

13.2 Functional Description

This section contains information about Inventory and Factory information stored permanently within the device.

©2026 MICROSENS GmbH & Co. KG - Hamm/Germany - www.microsens.com

13.3 Factory CLI Command Reference

The following table lists all CLI commands applicable for this feature section. For each parameter, the access mode is given:

R = Read Only, R/W = Read/Write, X = Executable Action.

Please note that the effective access rights are dependent on the login level of the user.

Category	Group	Table	Parameter	Options	Access	Description
Device.						
	factory.					Factory settings which are not changeable by user
			article_number		R	This device article number.
			serial_number		R	This device serial number.
			device_mac		R	This device MAC address.
			number_of_macs		R	Number of MAC addresses this device supports.
			hardware_version		R	This device hardware revision number.
			board_id		R	This identifies the basic hardware type for internal operation.
			project_number		R	Development project number.
			mechanical_features		R	Bit mask which identifies mechanical features of this device.
			hardware_features		R	Bit mask which identifies installed hardware features of this device.
			company_name		R	Complete name and address of the manufacturing company.
			company_short		R	Shorthand name of the manufacturing company.
			web_link		R	Link to company homepage.
			web_description		R	Product feature summary.
			custom_info		R/W	This field can be used to permanently store custom inventory or location data. The data are stored within the device in irremovable storage and thus will persist even when the SD card or the entire configuration is changed.

©2026 MICROSENS GmbH & Co. KG - Hamm/Germany - www.microsens.com

13.4 Factory Configuration Parameters

Group **Path**	**General Parameters** Device.Factory
article_number	This device article number. **Value** String, max. 32 characters. **OID** 1.3.6.1.4.1.3181.10.6.1.32.1 (factoryArticleNumber) 1.3.6.1.2.1.47.1.1.1.1.13 (entPhysicalModelName) 1.0.8802.1.1.2.1.5.4795.1.2.7.0 (lldpXMedLocModelName)
serial_number	This device serial number. **Value** String, max. 32 characters. **OID** 1.3.6.1.4.1.3181.10.6.1.32.2 (factorySerialNumber) 1.3.6.1.2.1.47.1.1.1.1.11 (entPhysicalSerialNum) 1.0.8802.1.1.2.1.5.4795.1.2.5.0 (lldpXMedLocSerialNum)
device_mac	This device MAC address. **Format** MAC Address *hh-hh-hh-hh-hh-hh* (*hh* = hexadecimal number between 00 to ff) **OID** 1.3.6.1.4.1.3181.10.6.1.32.3 (factoryDeviceMac)
number_of_macs	Number of MAC addresses this device supports. **Value** Number in range 0-65535 **OID** 1.3.6.1.4.1.3181.10.6.1.32.4 (factoryNumberOfMacs)
hardware_version	This device hardware revision number. **Value** String, max. 32 characters. **OID** 1.3.6.1.4.1.3181.10.6.1.32.5 (factoryHardwareVersion) 1.3.6.1.2.1.47.1.1.1.1.8 (entPhysicalHardwareRev) 1.0.8802.1.1.2.1.5.4795.1.2.2.0 (lldpXMedLocHardwareRev)
board_id	This identifies the basic hardware type for internal operation. **Value** Number in range 0-0xFFFFFFFF **OID** 1.3.6.1.4.1.3181.10.6.1.32.6 (factoryBoardId)
project_number	Development project number. **Value** String, max. 8 characters. **OID** 1.3.6.1.4.1.3181.10.6.1.32.7 (factoryProjectNumber)

©2026 MICROSENS GmbH & Co. KG - Hamm/Germany - www.microsens.com

mechanical_features	Bit mask which identifies mechanical features of this device.		
	Values	*DESKTOP*	Desktop unit
		RAIL	Industry enclosure for hat rail mounting
		DUCT_VERTICAL	Cable duct mounting, Vertical version
		DUCT_HORIZONTAL	Cable duct mounting, Horizontal version
		RACK	Rack based system
		STACKABLE	Extensible unit
		DC	Direct DC power input
		AC	Direct AC power input
		DUAL_PWR	Redundant power input
		EXT_TEMP	Extended operating temperature range (DC)
		EXT_SUPPLY	Extended power supply range
		EX_SECURE	Explosive environment supported
		MICRO_SD	Firmware on removable Micro SD card
		SDCARD	Firmware on removable standard SD card
		INTERNAL_MEMORY	
		IP30	Schutzklasse IP30
		IP42	Schutzklasse IP42
		IP44	Schutzklasse IP44
		IP55	Schutzklasse IP55
		IP67	Schutzklasse IP67
	OID	1.3.6.1.4.1.3181.10.6.1.32.8 (factoryMechanicalFeatures)	

©2026 MICROSENS GmbH & Co. KG - Hamm/Germany - www.microsens.com

hardware_features	Bit mask which identifies installed hardware features of this device.		
	Values	*POE_PLUS*	Power over Ethernet plus (30W ports) supported
		POE_PSE	Power over Ethernet plus (15W ports) supported
		POE_PD	Unit may be powered from POE source
		POE_4_PAIR	Power over Ethernet plus plus (60/90W ports) supported
		RAILWAY	Railway certified
		SUBSTATION	Power Substation certified
		EEE	Energy Efficient Ethernet
		SYNCE	Synchronous Ethernet supported
		1588	1588 protocol support
		USB	USB port supported
		RELAYS	Alarm relay connections
		RTC	Local real time clock
		MAX_100M	Hardware is limited to Fast Ethernet
		CSFP	Compact double SFP
		SFP	Pluggable optical port
		LC	Optical LC connector
		SC	Optical SC connector
		ST	Optical ST connector
		E2000	Optical E-2000 connector
		SLC	Smart Light Controller ports
	OID	1.3.6.1.4.1.3181.10.6.1.32.9 (factoryHardwareFeatures)	
company_name	Complete name and address of the manufacturing company.		
	Value	String, max. 64 characters.	
	OID	1.3.6.1.4.1.3181.10.6.1.32.10 (factoryCompanyName) 1.3.6.1.2.1.47.1.1.1.1.12 (entPhysicalMfgName) 1.0.8802.1.1.2.1.5.4795.1.2.6.0 (lldpXMedLocMfgName)	
company_short	Shorthand name of the manufacturing company.		
	Value	String, max. 16 characters.	
	OID	1.3.6.1.4.1.3181.10.6.1.32.11 (factoryCompanyShort)	
web_link	Link to company homepage.		
	Value	String, max. 128 characters.	
	OID	1.3.6.1.4.1.3181.10.6.1.32.12 (factoryWebLink)	

©2026 MICROSENS GmbH & Co. KG - Hamm/Germany - www.microsens.com

web_description	Product feature summary.	
	Value	String, max. 128 characters.
	OID	1.3.6.1.4.1.3181.10.6.1.32.13 (factoryWebDescription) 1.3.6.1.2.1.47.1.1.1.1.7 (entPhysicalName) 1.3.6.1.2.1.47.1.1.1.1.2 (entPhysicalDescr)
custom_info	This field can be used to permanently store custom inventory or location data. The data are stored within the device in irremovable storage and thus will persist even when the SD card or the entire configuration is changed.	
	Value	String, max. 512 characters.
	OID	1.3.6.1.4.1.3181.10.6.1.32.14 (factoryCustomInfo)

©2026 MICROSENS GmbH & Co. KG - Hamm/Germany - www.microsens.com

14 System Information

14.1 Key Features

Custom MAC address

While the MAC address is assigned at production time is possible to overwrite this MAC for special cases.

Should a unit need to be replaced and the MAC address of the original unit must be retained for some reason, the MAC can be reassigned.

Custom Inventory Data

The user can supply various private strings to customize the device. This includes port alias names (64 byte), system name, location and group strings (each 255 byte) plus a private inventory string of 512 byte length.

Customized inventory data permit integration in corporate inventory scheme.

Temperature Control

Temperature inside the device is monitored and actions are taken if required. There are warning events (Syslog, Trap) in several steps. Under severe condition the unit may reduce speed or power down some port to reduce heat dissipation.

The devices are designed to operate without a fan. They may be placed in hard to reach locations and thus early warning of possible heat issues can improve network reliability.

14.2 Functional Description

This section contains information about basic system hardware and software status.

©2026 MICROSENS GmbH & Co. KG - Hamm/Germany - www.microsens.com

14.3 System CLI Command Reference

The following table lists all CLI commands applicable for this feature section. For each parameter, the access mode is given:

R = Read Only, R/W = Read/Write, X = Executable Action.

Please note that the effective access rights are dependent on the login level of the user.

Category	Group	Table	Parameter	Options	Access	Description
Device.						
	system.					General system information and control functions
			show_time_date		X	Show system time and date.
			set_time		X	Sets the system clock (time only). Syntax: 12:30:00
			set_date		X	Sets the system clock (date only). Syntax: 2012-12-24
			show_utilization		X	Show CPU status information
			reboot_device		X	This command will restart the device. All communication will be disrupted! Syntax: reboot_device = CONFIRM.
			create_snapshot		X	Creates a snapshot of all relevant configuration and status information packaged as a single tar archive. This file can be found in service/snapshot.
			send_wake_on_lan_packet		X	This command will send a magic packet to wake up a selected sleeping device. The device is identified by its MAC address. Syntax: send_wake_on_lan_packet = 00:11:22:44:55:66.
			alternative_mac_address		R/W	This field is usually empty. This field may be used to override the MAC address fixed in the factory setting. NOTE: This value is only activated after a reset!
			boot_preference		R/W	This feature only applies to devices that feature internal memory plus plugged-in SD cards. It defines which software is used after reboot.
			inventory		R/W	Inventory string free for customer use. Up to 512 character are accepted. Note this config is linked to the SD card and may change when config or SD card is exchanged. For an inventory information that is fixed to the hardware use Device.Factory.custom_info command.
			autorun_cli_script		R/W	Optional cli scripts executed after power sequence is completed. Several scripts may be assigned, with comma or blank separation.
			serial_port		R/W	When set to DISABLED the local serial console port is disabled. Local access via serial cable is blocked. While this enhances local protection it also closes the emergency access should the device become inaccessible over the network due to misconfiguration. Other setting permit use of the serial port as TERMINAL_SERVER to attach a foreign device for management or to SMART_SENSOR to attach a local hardware extension for use with smart office solutions.

©2026 MICROSENS GmbH & Co. KG - Hamm/Germany - www.microsens.com

permit_debug_access	R/W	When enabled it is possible to log into the system for debug purposes. This includes telnet/ssh, as well as web and file transfer protocols. To protect the system from unauthorized access it is advised to disable this feature unless instructed by authorized service personnel. NOTE: To ensure that any possibly pending debug access is terminated reboot the device after setting this parameter to disabled.
permit_incoming_alerts	R/W	When enabled it is possible receive alerts via from external devices via SNMP or HTTP(S). This feature may be used in combination with custom scripting to react to external events. To protect the system from unauthorized spam it is advised to disable this feature unless there is an application for it.
character_set	R/W	This parameter can be set to support languages with characters not found the normal Western European character set. Be sure to set your CLI terminal to the matching setting.
configuration_save_mode	R/W	In most cases the configuration of the device should be permanently saved and automatically be applied after a power up. In some cases, however, where public access to the device is granted it can be desirable to only save changes temporarily. In this mode all configuration changes that occurred after setting this mode will be saved in RAM only and will be forgotten on the next system reboot. Important: When this parameter changed to PERMANENTLY all outstanding changes are committed to SD card immediately. When this parameter is changed to temporarily, this already is not saved permanently. Use Management.Files.configuration.commit_config to save this setting before proceeding.
compatibility.		This section contains parameter that may be required to select certain compatibility functions that cannot be auto-detected by the system.
link_detection	R/W	Usually the default setting POLL_AND_INTERRUPT should be selected. To attain fastest possible link change detection, as required by the RING protocols, select INT_ONLY. However, some older devices do not offer the faster interrupt only mode and cannot be used in this mode.
script_schedule[DYNAMIC].		This dynamic table permits the setup of automated script execution based on precise time scheduling definition. Any number of scripts may be executed at any desired interval or at selected dates. Please ensure the time and date are properly set (via NTP) when using this feature.
name	R/W	Unique name to reference this entry and to remember whose MAC address is entered.
mode	R/W	When set to disabled this entry is ignored. It is recommended to first set the mode to disabled before the associated time values are modified. When all values are properly set re-enable the entry.
cli_script	R/W	Enter the name of the cli script that should be executed when the defined time occurs. Ensure that the script name selects a valid file. Several scripts may be assigned, with comma or blank separation.
minutes	R/W	Format: 3,14 select exact minutes hour:03 and hour: 14. * is every minute. */5 defines every five minutes.
hours	R/W	Format: 0-23. Range and comma separation is permitted. * is every hour.
days	R/W	Format: 1-31. Range and comma separation is permitted. * is every day.

©2026 MICROSENS GmbH & Co. KG - Hamm/Germany - www.microsens.com

	months	R/W	Format: 1-12 or Jan-Dec. Range and comma separation is permitted. * is every month.
	weekdays	R/W	Format: 0-6 or Sun-Sat. Range and comma separation is permitted. * is every day.
	last_boot_time	R	The time and date when this device has booted.
	uptime	R	Uptime since last reboot in seconds.
	used_mac_address	R	Contains the mac address used by this unit. Usually follows to MAC defined in the factory setting, but may be overwritten by the alternative_mac_address.
	used_boot_media	R	
	temperature	R	Temperature value in centigrade.
	climate_level	R	Annotated temperature level.
firmware.			This section provides details about the running firmware.
	running_version	R	Running firmware version.
	build_date	R	Build date of the running firmware. Format: 2012-01-18 12:00:22.
	build_number	R	Build number of the running firmware retrieved from the repository.
	patch_version	R	If extra patches are installed, their version(s) are indicated here.
save_info.			This section provided status information about the internal parameter saving process.
	last_saved_parameter	R	Records the last written parameter.
	save_mode	R	Reflects Device.system.configuration_save_mode setting.
	write_status	R	Indicates if last parameter was written to SD card or temporary RAM.
	time_stamp	R	Records the time the write status was last changed.

©2026 MICROSENS GmbH & Co. KG - Hamm/Germany - www.microsens.com

14.4 System Configuration Parameters

Group **Path**	**General Parameters** Device.System
show_time_date	Show system time and date. **Action** Excecute command. **OID** 1.3.6.1.4.1.3181.10.6.1.30.1 (systemShowTimeDate)
set_time	Sets the system clock (time only). Syntax: 12:30:00 **Action** Excecute command with parameter string max. 8 characters. **OID** 1.3.6.1.4.1.3181.10.6.1.30.2 (systemSetTime)
set_date	Sets the system clock (date only). Syntax: 2012-12-24 **Action** Excecute command with parameter string max. 10 characters. **OID** 1.3.6.1.4.1.3181.10.6.1.30.3 (systemSetDate)
show_utilization	Show CPU status information **Action** Excecute command. **OID** 1.3.6.1.4.1.3181.10.6.1.30.4 (systemShowUtilization)
reboot_device	This command will restart the device. All communication will be disrupted! Syntax: reboot_device = CONFIRM. **Action** Excecute command with parameter string max. 16 characters. **OID** 1.3.6.1.4.1.3181.10.6.1.30.5 (systemRebootDevice)
create_snapshot	Creates a snapshot of all relevant configuration and status information packaged as a single tar archive. This file can be found in service/snapshot. **Action** Excecute command. **OID** 1.3.6.1.4.1.3181.10.6.1.30.6 (systemCreateSnapshot)
send_wake_on_lan_packet	This command will send a magic packet to wake up a selected sleeping device. The device is identified by its MAC address. Syntax: send_wake_on_lan_packet = 00:11:22:44:55:66. **Action** Excecute command with parameter string max. 20 characters. **OID** 1.3.6.1.4.1.3181.10.6.1.30.7 (systemSendWakeOnLanPacket)

©2026 MICROSENS GmbH & Co. KG - Hamm/Germany - www.microsens.com

alternative_mac_address	This field is usually empty. This field may be used to override the MAC address fixed in the factory setting. NOTE: This value is only activated after a reset! **Format** MAC Address *hh-hh-hh-hh-hh-hh* (*hh* = hexadecimal number between 00 to ff) **OID** 1.3.6.1.4.1.3181.10.6.1.30.8 (systemAlternativeMacAddress)
boot_preference	This feature only applies to devices that feature internal memory plus plugged-in SD cards. It defines which software is used after reboot. **Values** *SD_CARD_FIRST* The SD card is tried first. When SD card is not present the internal memory is used to boot from if available. *INTERNAL_FIRST* The internal memory is tried first. When memory is not responding a possible SD card is used to boot from if available. *SD_CARD_ONLY* The SD card is used to boot. When SD card is not present the boot process will stop even if internal memory is available. *INTERNAL_ONLY* The internal memory is used to boot. Even when an optional SD card is inserted, it is not used to boot from. Should the internal memory fail will the boot process stop. Note: such a failed system cannot be recovered in the field and will need to be send in for repair. Use this setting to safeguard against a potentially illegally inserted SD card. **OID** 1.3.6.1.4.1.3181.10.6.1.30.9 (systemBootPreference)
inventory	Inventory string free for customer use. Up to 512 character are accepted. Note this config is linked to the SD card and may change when config or SD card is exchanged. For an inventory information that is fixed to the hardware use Device.Factory.custom_info command. **Value** String, max. 512 characters. **OID** 1.3.6.1.4.1.3181.10.6.1.30.10 (systemInventory) 1.3.6.1.2.1.47.1.1.1.1.15 (entPhysicalAssetID)
autorun_cli_script	Optional cli scripts executed after power sequence is completed. Several scripts may be assigned, with comma or blank separation. **Value** String, max. 512 characters. **OID** 1.3.6.1.4.1.3181.10.6.1.30.11 (systemAutorunCliScript)

©2026 MICROSENS GmbH & Co. KG - Hamm/Germany - www.microsens.com

serial_port

When set to DISABLED the local serial console port is disabled. Local access via serial cable is blocked. While this enhances local protection it also closes the emergency access should the device become inaccessible over the network due to misconfiguration. Other setting permit use of the serial port as TERMINAL_SERVER to attach a foreign device for management or to SMART_SENSOR to attach a local hardware extension for use with smart office solutions.

Values

DISABLED	The serial port can no longer be used for local login.
CONSOLE	Normal setting which permits use of the local serial port as emergency login console.
APP_CONTROLLED	The port may be used for arbitrary serial I/O controlled via a microScript or App.
TERMINAL_SERVER	The serial port is internally connected to the terminal server feature which permits to relay data between a telnet or SSH connection and the serial port. This can be used to access a (legacy) foreign device via Ethernet.
SMART_SENSOR	The serial port expects an external extension module which relays infrastructure automation data.

OID 1.3.6.1.4.1.3181.10.6.1.30.12 (systemSerialPort)

permit_debug_access

When enabled it is possible to log into the system for debug purposes. This includes telnet/ssh, as well as web and file transfer protocols. To protect the system from unauthorized access it is advised to disable this feature unless instructed by authorized service personnel. NOTE: To ensure that any possibly pending debug access is terminated reboot the device after setting this parameter to disabled.

Values enabled, disabled

OID 1.3.6.1.4.1.3181.10.6.1.30.13 (systemPermitDebugAccess)

permit_incoming_alerts

When enabled it is possible receive alerts via from external devices via SNMP or HTTP(S). This feature may be used in combination with custom scripting to react to external events. To protect the system from unauthorized spam it is advised to disable this feature unless there is an application for it.

Values enabled, disabled

OID 1.3.6.1.4.1.3181.10.6.1.30.14 (systemPermitIncomingAlerts)

character_set

This parameter can be set to support languages with characters not found the normal Western European character set. Be sure to set your CLI terminal to the matching setting.

Values

ISO_8859_1	Western Europe character set
ISO_8859_5	Cyrillic character set

OID 1.3.6.1.4.1.3181.10.6.1.30.15 (systemCharacterSet)

©2026 MICROSENS GmbH & Co. KG - Hamm/Germany - www.microsens.com

configuration_save_mode	In most cases the configuration of the device should be permanently saved and automatically be applied after a power up. In some cases, however, where public access to the device is granted it can be desirable to only save changes temporarily. In this mode all configuration changes that occurred after setting this mode will be saved in RAM only and will be forgotten on the next system reboot. Important: When this parameter changed to PERMANENTLY all outstanding changes are committed to SD card immediately. When this parameter is changed to temporarily, this already is not saved permanently. Use Management.Files.configuration.commit_config to save this setting before proceeding. **Values** *PERMANENTLY* Normal mode. A changes are saved on the SD card or internal memory *TEMPORARILY* Special mode where configuration is only saved in volatile RAM until next reboot or manual commit_config **OID** 1.3.6.1.4.1.3181.10.6.1.30.16 (systemConfigurationSaveMode)

Group	**script_schedule**, dynamical size
Path	Device.System.script_schedule
Description	This dynamic table permits the setup of automated script execution based on precise time scheduling definition. Any number of scripts may be executed at any desired interval or at selected dates. Please ensure the time and date are properly set (via NTP) when using this feature.

name	Unique name to reference this entry and to remember whose MAC address is entered. **Value** String, max. 32 characters. **OID** 1.3.6.1.4.1.3181.10.6.1.30.18.1.2 (scriptScheduleName)
mode	When set to disabled this entry is ignored. It is recommended to first set the mode to disabled before the associated time values are modified. When all values are properly set re-enable the entry. **Values** enabled, disabled **OID** 1.3.6.1.4.1.3181.10.6.1.30.18.1.3 (scriptScheduleMode)
cli_script	Enter the name of the cli script that should be executed when the defined time occurs. Ensure that the script name selects a valid file. Several scripts may be assigned, with comma or blank separation. **Value** String, max. 512 characters. **OID** 1.3.6.1.4.1.3181.10.6.1.30.18.1.4 (scriptScheduleCliScript)
minutes	Format: 3,14 select exact minutes hour:03 and hour:14. * is every minute. */5 defines every five minutes. **Value** String, max. 32 characters. **OID** 1.3.6.1.4.1.3181.10.6.1.30.18.1.5 (scriptScheduleMinutes)

©2026 MICROSENS GmbH & Co. KG - Hamm/Germany - www.microsens.com

hours	Format: 0-23. Range and comma separation is permitted. * is every hour.
	Value String, max. 32 characters.
	OID 1.3.6.1.4.1.3181.10.6.1.30.18.1.6 (scriptScheduleHours)
days	Format: 1-31. Range and comma separation is permitted. * is every day.
	Value String, max. 32 characters.
	OID 1.3.6.1.4.1.3181.10.6.1.30.18.1.7 (scriptScheduleDays)
months	Format: 1-12 or Jan-Dec. Range and comma separation is permitted. * is every month.
	Value String, max. 32 characters.
	OID 1.3.6.1.4.1.3181.10.6.1.30.18.1.8 (scriptScheduleMonths)
weekdays	Format: 0-6 or Sun-Sat. Range and comma separation is permitted. * is every day.
	Value String, max. 32 characters.
	OID 1.3.6.1.4.1.3181.10.6.1.30.18.1.9 (scriptScheduleWeekdays)

Group	**compatibility**
Path	Device.System.compatibility
Description	This section contains parameter that may be required to select certain compatibility functions that cannot be auto-detected by the system.

link_detection	Usually the default setting POLL_AND_INTERRUPT should be selected. To attain fastest possible link change detection, as required by the RING protocols, select INT_ONLY. However, some older devices do not offer the faster interrupt only mode and cannot be used in this mode.		
	Values	*POLL_AND_INTERRUPT*	Normal mode. When possible interrupts are used. Polling catches devices without interrupt capability.
		INTERRUPT_ONLY	Fast interrupt is used to detect link changes. Some devices do not offer interrupts on all ports. Using this setting stops additional polling which results in even faster and more uniform detection time.
	OID	1.3.6.1.4.1.3181.10.6.1.30.17.1.2 (compatibilityLinkDetection)	

©2026 MICROSENS GmbH & Co. KG - Hamm/Germany - www.microsens.com

14.5 System Status Parameters

Group	**General Parameters**
Path	Device.System

last_boot_time

The time and date when this device has booted.

Value String, max. 32 characters.

OID 1.3.6.1.4.1.3181.10.6.1.30.100 (systemLastBootTime)

uptime

Uptime since last reboot in seconds.

Value PERIOD0-0xFFFFFFFF

OID 1.3.6.1.4.1.3181.10.6.1.30.101 (systemUptime)
1.3.6.1.2.1.1.3 (sysUpTime)

used_mac_address

Contains the mac address used by this unit. Usually follows to MAC defined in the factory setting, but may be overwritten by the alternative_mac_address.

Format MAC Address
hh-hh-hh-hh-hh-hh
(*hh* = hexadecimal number between 00 to ff)

OID 1.3.6.1.4.1.3181.10.6.1.30.102 (systemUsedMacAddress)
1.3.6.1.2.1.17.1.1 (dot1dBaseBridgeAddress)
1.0.8802.1.1.2.1.3.2 (lldpLocChassisId)
1.0.8802.1.1.2.1.3.8.1.2 (lldpLocManAddr)
1.3.6.1.2.1.2.2.1.6 (ifPhysAddress)

used_boot_media

Values

SD_CARD	System booted from SD card
INTERNAL_MEMORY	System booted from internal memory
NFS	System booted via network file system

OID 1.3.6.1.4.1.3181.10.6.1.30.103 (systemUsedBootMedia)

temperature

Temperature value in centigrade.

Value Number in range 0-255

OID 1.3.6.1.4.1.3181.10.6.1.30.104 (systemTemperature)

©2026 MICROSENS GmbH & Co. KG - Hamm/Germany - www.microsens.com

climate_level	Annotated temperature level.		
	Values	*UNKNOWN*	No thermometer available
		CRITICAL_LOW	Temperature is below the specified operating range
		LOW	Temperature is low
		NORMAL	Normal operating temperature
		INCREASED	Temperature higher than normal
		HIGH	Temperature is high and should increase much more
		CRITICAL_HIGH	Too high, device will switch all Gigabit Ethernet ports to Fast Ethernet. This down speed will prevail until climate level INCREASED to reached
		SHUTDOWN	The device is extremely hot and will switch off the ports completely to protect itself. It will only recover once climate level HIGH is reached or the system is rebooted.
	OID	1.3.6.1.4.1.3181.10.6.1.30.105 (systemClimateLevel)	

Group	**firmware**
Path	Device.System.firmware
Description	This section provides details about the running firmware.

running_version	Running firmware version.	
	Value	String, max. 32 characters.
	OID	1.3.6.1.4.1.3181.10.6.1.30.106.1.2 (firmwareRunningVersion) 1.3.6.1.2.1.47.1.1.1.1.10 (entPhysicalSoftwareRev) 1.0.8802.1.1.2.1.5.4795.1.2.4.0 (lldpXMedLocSoftwareRev)
build_date	Build date of the running firmware. Format: 2012-01-18 12:00:22.	
	Value	String, max. 32 characters.
	OID	1.3.6.1.4.1.3181.10.6.1.30.106.1.3 (firmwareBuildDate)
build_number	Build number of the running firmware retrieved from the repository.	
	Value	String, max. 16 characters.
	OID	1.3.6.1.4.1.3181.10.6.1.30.106.1.4 (firmwareBuildNumber) 1.3.6.1.2.1.47.1.1.1.1.9 (entPhysicalFirmwareRev) 1.0.8802.1.1.2.1.5.4795.1.2.3.0 (lldpXMedLocFirmwareRev)
patch_version	If extra patches are installed, their version(s) are indicated here.	
	Value	String, max. 32 characters.
	OID	1.3.6.1.4.1.3181.10.6.1.30.106.1.5 (firmwarePatchVersion)

©2026 MICROSENS GmbH & Co. KG - Hamm/Germany - www.microsens.com

Group	**save_info**
Path	Device.System.save_info
Description	This section provided status information about the internal parameter saving process.

last_saved_parameter

Records the last written parameter.

Value String, max. 128 characters.

OID 1.3.6.1.4.1.3181.10.6.1.30.107.1.2 (saveInfoLastSavedParameter)

save_mode

Reflects Device.system.configuration_save_mode setting.

Values

PERMANENTLY	Normal mode. A changes are saved on the SD card or internal memory
TEMPORARILY	Configuration is only saved in RAM

OID 1.3.6.1.4.1.3181.10.6.1.30.107.1.3 (saveInfoSaveMode)

write_status

Indicates if last parameter was written to SD card or temporary RAM.

Values

NOTHING_TO_SAVE	There have been no writes since last system boot
PROCESSING	Parameter is being processed. This should be very brief state and is typically not seen. If this state persists an error may be indicated
SAVED_TO_RAM	The parameter was internally processed, executed and saved in RAM copy of configuration
SAVED_TO_SDCARD	The parameter was successfully written to the SD card. This is the normal state.

OID 1.3.6.1.4.1.3181.10.6.1.30.107.1.4 (saveInfoWriteStatus)

time_stamp

Records the time the write status was last changed.

Value TIMESTAMP0-0xFFFFFFFF

OID 1.3.6.1.4.1.3181.10.6.1.30.107.1.5 (saveInfoTimeStamp)

©2026 MICROSENS GmbH & Co. KG - Hamm/Germany - www.microsens.com

15 Hardware Information

15.1 Key Features

Function

Fanless Layer 2+ Switch controlled by high speed 1Ghz ARM CPU. The G6 devices use a 32Bit 1Ghz CPU, while the G6 Rev1.5 and all G8 devices utilize a 64Bit ARM CPU.

Latest technology.

Green IT

State-of-the-Art chip technology supports Energy Efficient Ethernet (EEE) according to IEEE 802.3az.

Most energy efficient switch type.

Jumbo Frames

Supports Jumbo-Frames up to 10kBytes length.

RGB LED

Microswitches offer full color led indicators permit extensive yet easy to remember status decoding without any tools. Quiet mode turns off most leds for unobstrusive operation. Lightshow mode helps to find a switch among others.

Quick status checking without any tools. Quiet and dark modes intended for office environment where obstrusive blinking is undesireable.

Input / Output Pins

(Industrial Switch only)
Two decoupled input pins and two relay outputs are available in the Industry Switch. Signal changes at the input pins will trigger events (Syslog, Traps). These event can also trigger user defined cli scripts file for flexible use. The relays may be triggered on power, redundancy or thermal problems. Relays and LEDs can be set to static or blink mode. Relays may also be controlled via scripts for full custom control.

May be used to control external ventilation or alarm systems. Input may connect to door contact or UPS error signal for example. Input can trigger any desired system action due to scripting feature.

PTP Precision Time Protocol

(Industrial Switch only)
(Not available with G6 device)
The Precision Time Protocol conveys precise time information through an IP network according to IEEE 1588v2.

Useful in factory automation applications

15.2 Functional Description

This section contains information about hardware status and display configuration.

©2026 MICROSENS GmbH & Co. KG - Hamm/Germany - www.microsens.com

15.3 Hardware CLI Command Reference

The following table lists all CLI commands applicable for this feature section. For each parameter, the access mode is given:

R = Read Only, R/W = Read/Write, X = Executable Action.

Please note that the effective access rights are dependent on the login level of the user.

Category	Group	Table	Parameter	Options	Access	Description
Device.						
	hardware.					Basic device configuration and information
			led_test		X	Runs a LED test whereby all LED light up in all possible colors for checking their function. The tests terminates within a few seconds.
			led_mode		R/W	The LED display can be configured to be less intrusive.
			power_supply_1_monitored		R/W	When disabled a missing power supply 1 will not turn the associated led red on failure. Do this when single power supply 2 operation is used or when the device is powered solely by PoE. This feature only applies to industrial switches.
			power_supply_2_monitored		R/W	When disabled a missing power supply 2 will not turn the associated led red on failure. Do this when single power supply 1 operation is used or when the device is powered solely by PoE. This feature only applies to industrial switches.
			factory_reset_button		R/W	When disabled the factory button will trigger the factory reset function when pressed for a long time. The IP discover function upon a short button click is not affected.
		cable_test_config[PORT].				The cable tester allows for detection of copper cable faults and can even detect where the fault is located. By using a OTDR SFP, measurements can also be done on fiber ports
			enable_auto_cable_test		R/W	When enabled a cable test is performed each time the link goes down. The test is only performed for copper ports, dual media ports in copper mode or when an OTDR SFP is detected.
			event_generation		R/W	When the cable termination status changes or a change in the fiber is detected an event can be raised.
			reflection_threshold		R/W	Select a value up to 508 which is used to decide between a connected cable and a remotely disconnected cable. With actively terminated data ports, the detection is difficult and precise setup is required. Please refer to cable_test_status.reflection_value for further details. Applies to copper only.

©2026 MICROSENS GmbH & Co. KG - Hamm/Germany - www.microsens.com

	reflection_hysteresis	R/W	Choose value to prevent oscillation when reflection value is slightly shifting. For OTDR measurement, the value is interpreted as minimum meters of change in a reflection for it to be considered a different reflection.
	start_test_now	X	May be used to manually start a cable test. ATTENTION: If the port is in link up status it will be forced to link down first. This will disrupt the current data traffic. Therefore, type start_test_now = CONFIRM.
	create_reference	X	Is used to start a OTDR reference measurement. Only applies to optical cables with the required SFP installed. Type create_reference = CONFIRM.
	reference_data	R/W	The content of this field is created with the create_reference action command and should not be edited manually.
io_signal_config.			
	signal_mode	R/W	Permit setting of I/O signal LEDs and relays to static or blink mode for increased visualization.
	input_1_mode	R/W	When this function is activated the external alarm input 1 is monitored. Note: alarm inputs are not available in all product versions.
	input_1_name	R/W	A customer specific name can be specified for input 1. This name will appear in the associated event messages. The name (up to the first blank) determines the attribute used in SmartOffice context.
	input_2_mode	R/W	When this function is activated the external alarm input 2 is monitored. Note: alarm inputs are not available in all product versions.
	input_2_name	R/W	A customer specific name can be specified for input 2. This name will appear in the associated event messages. The name (up to the first blank) determines the attribute used in SmartOffice context.
	output_1_trigger	R/W	Defines on which condition the alarm relay 1 is activated. Note: alarm relays are not available in all product versions.
	output_1_name	R/W	A customer specific name can be specified for alarm output 1. This name will appear in the associated event messages. The name (up to the first blank) determines the attribute used in SmartOffice context.
	output_2_trigger	R/W	Defines on which condition the alarm relay 2 is activated. Note: alarm relays are not available in all product versions.
	output_2_name	R/W	A customer specific name can be specified for alarm output 2. This name will appear in the associated event messages. The name (up to the first blank) determines the attribute used in SmartOffice context.
ptp_config.			The Precision Time Protocol conveys precise time information through an IP network according to IEEE 1588v2.
	enable_ptp	R/W	General enable the Precision Time Protocol function.

©2026 MICROSENS GmbH & Co. KG - Hamm/Germany - www.microsens.com

	show_summary	X	Display a summary of the PTP port status.
	vlan_id	R/W	Defines the VLAN ID used for PTP traffic. Set to 0 if VLAN is unused.
	master_ports	R/W	Select which port(s) are forwarding the network clock downstream. port/slot format is expected. A comma separated list can be specified.
	slave_ports	R/W	Select which port(s) are being connected to a network and can receive the network clock. port/slot format is expected. A comma separated list can be specified.
	clock_type	R/W	Determines handling of PTP messaging. See the description of the options.
	delay_mechanism	R/W	Define how delay compensation is calculated.
	power_supply_1_status	R	Displays state of primary supply or only supply for single supply systems.
	power_supply_2_status	R	Displays state of secondary supply if available.
	running_on_poe	R	When set the unit currently operates on the PD input via PoE.
	fan_status	R	Displays state of cooling fan. Indicates UNUSED in fanless devices.
	sd_card_status	R	Current status of SD-card.
	num_of_ports	R	Total number of Ethernet ports this hardware offers.
	mask_of_existing_ports	R	Set bit for each port that physically existing and could be in use.
	mask_of_sfp_ports	R	Marks which ports support SFPs.
	mask_of_poe_ports	R	Marks which ports support PoE output.
module_info[4].			This section indicates which modules are inserted in the optional extension slots.
	unit_type	R	Identifies the general type of module.
	article_number	R	The article number of the module in this slot.
	serial_number	R	The serial number of the module in this slot.
	hardware_version	R	This device hardware revision number.
	project_number	R	MICROSENS project number.
	occupied_slots	R	Lists all slots contained in this module.
	description	R	Feature summary of the module.
slot_info[8].			This section indicates which modules are inserted in the optional extension slots.
	board_type	R	General type of board function
	board_id	R	This identifies the board type for internal operation.
	version_bits	R	Version bits from hardware or backplane.
port_info[PORT].			Used to map physical to logical port ids.
	system_slot	R	Describes on which system slot this port index is located.
	switch_port	R	Describes on which switch port this port index is located.
	user_slot	R	Slot number as seen by customer.
	user_port	R	Port number as seen by customer.

©2026 MICROSENS GmbH & Co. KG - Hamm/Germany - www.microsens.com

	snmp_port	R	Slot and port representation as used in SNMP. Formula is Slot*100 + Port.
	snmp_instance	R	Port instance counting from 0 to number of ports
	hardware_port	R	Port number as used internally. Ports may not be in sequential order.
	interface_type	R	Identifies port as copper or optical. Also used for snmp ifType definition
	properties	R	Describes which functions the port can support.
port_names[PORT].			This table contains additional port information names suitable for use in snmp.
	cli_name	R	Port name as used in cli and as required for ifName (read only)
	port_description	R	Port name as required for ifDescription (read only)
port_leds[PORT].			This section indicates the state of all port related LEDs.
	ethernet_color	R	Ethernet Link LED.
	ethernet_blinking	R	Ethernet Link LED.
	poe_color	R	Power over Ethernet LED. For optical ports this indicates signal detect status.
	poe_blinking	R	Power over Ethernet LED. For optical ports this indicates signal detect status.
device_leds.			This section indicates the state of all LEDs which are not port related. Please note: Not every unit offers all LEDs.
	system_1_color	R	This status corresponds to 'sys' LED on some devices.
	system_1_blinking	R	This status corresponds to 'sys' LED on some devices.
	system_2_color	R	Displays external management activity.
	system_2_blinking	R	Displays external management activity.
	power_on_1_color	R	This status corresponds to 'on' LED on some devices.
	power_on_1_blinking	R	This status corresponds to 'on' LED on some devices.
	power_on_2_color	R	Alternative power input LED.
	power_on_2_blinking	R	Alternative power input LED.
	ring_1_color	R	This LED is used when ring protection is enabled.
	ring_1_blinking	R	This LED is used when ring protection is enabled.
	ring_2_color	R	This LED is used when ring protection is enabled.
	ring_2_blinking	R	This LED is used when ring protection is enabled.
	signal_in_1_color	R	Indicates status of alarm input 1.
	signal_in_1_blinking	R	Indicates status of alarm input 1.
	signal_in_2_color	R	Indicates status of alarm input 2.
	signal_in_2_blinking	R	Indicates status of alarm input 2.
	signal_out_1_color	R	Indicates status of alarm relay output 1.
	signal_out_1_blinking	R	Indicates status of alarm relay output 1.

©2026 MICROSENS GmbH & Co. KG - Hamm/Germany - www.microsens.com

	signal_out_2_color	R	Indicates status of alarm relay output 2.
	signal_out_2_blinking	R	Indicates status of alarm relay output 2.
cable_test_status[PORT].			This table display the result of the last cable test. Values are only available for copper ports while a link is down and if the cable test function is enabled or for optical ports with an OTDR SFP present
	update_time_stamp	R	Indicates the time when this record was last updated.
	pair_0_state	R	Indicates line termination test results for wire pair 0 (Pins 1/2). Applies to copper only.
	pair_0_distance_to_fault	R	Distance to fault on wire pair 0 in centimeters. Indicates 0 when no fault is detected or the function is unused. Applies to copper only.
	pair_1_state	R	Indicates line termination test results for wire pair 1 (Pins 3/6). Applies to copper only.
	pair_1_distance_to_fault	R	Distance to fault on wire pair 1 in centimeters. Indicates 0 when no fault is detected or the function is unused. Applies to copper only.
	pair_2_state	R	Indicates line termination test results for wire pair 2 (Pins 4/5). Applies to copper only.
	pair_2_distance_to_fault	R	Distance to fault on wire pair 2 in centimeters. Indicates 0 when no fault is detected or the function is unused. Applies to copper only.
	pair_3_state	R	Indicates line termination test results for wire pair 3 (Pins 7/8). Applies to copper only.
	pair_3_distance_to_fault	R	Distance to fault on wire pair 3 in centimeters. Indicates 0 when no fault is detected or the function is unused. Applies to copper only.
	reflection_value	R	A unitless value that indicates a measure of reflection level. For difficult to detect actively terminated devices perform a measurement with remotely plugged-in and then unplugged cable. Note the reflection values an choose a value in the middle as reflection_threshold configuration value. Applies to copper only.
	cable_status	R	Indicates the concluded status summary. Applies to copper only.
	current_otdr_reflections	R	Number and location of currently detected reflections for an active OTDR SFP on this port.
io_signal_status.			This section is only used for devices which offer external signal inputs and outputs.
	input_1_alarm_active	R	Indicates true when the input 1 is logically active.
	input_2_alarm_active	R	Indicates true when the input 2 is logically active.
	output_1_relay_active	R	Indicates true when the output 1 relay is activated.
	output_2_relay_active	R	Indicates true when the output 2 relay is activated.

©2026 MICROSENS GmbH & Co. KG - Hamm/Germany - www.microsens.com

tcam_status[256].			The TCAM is a programmable wire speed packet filter. The filter is controlled by the system automatically. This table indicates which filters have been set.
	control_file	R	Reflects the name of the control file associated with this tam entry.
	description	R	Descriptive text what explains what this TCAM entry will do.
memory_utilization.			The table indicates memory usage
	flash_free_megabyte	R	Amount of free flash memory in MB
	flash_used_percent	R	Amount of flash memory used up in percent
	ram_disk_free_megabyte	R	Amount of free ram disk memory in MB
	ram_disk_used_percent	R	Amount of ram disk memory used up in percent

©2026 MICROSENS GmbH & Co. KG - Hamm/Germany - www.microsens.com

15.4 Hardware Configuration Parameters

Group	**General Parameters**		
Path	Device.Hardware		
led_test	Runs a LED test whereby all LED light up in all possible colors for checking their function. The tests terminates within a few seconds.		
	Action	Excecute command.	
	OID	1.3.6.1.4.1.3181.10.6.1.31.1 (hardwareLedTest)	
led_mode	The LED display can be configured to be less intrusive.		
	Values	*DYNAMIC*	LED display static states and blink when data is present on a port
		STATIC	LED display static states but do not blink with data
		QUIET	Display is reduced to sys and on LED. Port LEDs remain off
		DARK	All LED are off. This mode is not recommended as the unit may mistakenly be deemed powered down
		LIGHTSHOW	This mode is similar to a led_test but permanent. This may be turned on to easier locate a physical unit among others.
	OID	1.3.6.1.4.1.3181.10.6.1.31.2 (hardwareLedMode)	
power_supply_1_monitored	When disabled a missing power supply 1 will not turn the associated led red on failure. Do this when single power supply 2 operation is used or when the device is powered solely by PoE. This feature only applies to industrial switches.		
	Values	enabled, disabled	
	OID	1.3.6.1.4.1.3181.10.6.1.31.3 (hardwarePowerSupply1Monitored)	
power_supply_2_monitored	When disabled a missing power supply 2 will not turn the associated led red on failure. Do this when single power supply 1 operation is used or when the device is powered solely by PoE. This feature only applies to industrial switches.		
	Values	enabled, disabled	
	OID	1.3.6.1.4.1.3181.10.6.1.31.4 (hardwarePowerSupply2Monitored)	
factory_reset_button	When disabled the factory button will trigger the factory reset function when pressed for a long time. The IP discover function upon a short button click is not affected.		
	Values	enabled, disabled	
	OID	1.3.6.1.4.1.3181.10.6.1.31.5 (hardwareFactoryResetButton)	

©2026 MICROSENS GmbH & Co. KG - Hamm/Germany - www.microsens.com

Group	**cable_test_config**, for each port[0..24]
Path	Device.Hardware.cable_test_config[port]
Description	The cable tester allows for detection of copper cable faults and can even detect where the fault is located. By using a OTDR SFP, measurements can also be done on fiber ports

enable_auto_cable_test

When enabled a cable test is performed each time the link goes down. The test is only performed for copper ports, dual media ports in copper mode or when an OTDR SFP is detected.

Values enabled, disabled

OID 1.3.6.1.4.1.3181.10.6.1.31.6.1.2 (cableTestConfigEnableAutoCableTest)

event_generation

When the cable termination status changes or a change in the fiber is detected an event can be raised.

Values

DISABLED	No events are generated
ANY_CHANGE	Any termination or length change on any cable pair will trigger an event
CONNECTIONS_ONLY	Only change of connection events will be generated. (Remote device is plugged-in or unplugged)

OID 1.3.6.1.4.1.3181.10.6.1.31.6.1.3 (cableTestConfigEventGeneration)

reflection_threshold

Select a value up to 508 which is used to decide between a connected cable and a remotely disconnected cable. With actively terminated data ports, the detection is difficult and precise setup is required. Please refer to cable_test_status.reflection_value for further details. Applies to copper only.

Value Number in range 0-65535

OID 1.3.6.1.4.1.3181.10.6.1.31.6.1.4 (cableTestConfigReflectionThreshold)

reflection_hysteresis

Choose value to prevent oscillation when reflection value is slightly shifting. For OTDR measurement, the value is interpreted as minimum meters of change in a reflection for it to be considered a different reflection.

Value Number in range 0-65535

OID 1.3.6.1.4.1.3181.10.6.1.31.6.1.5 (cableTestConfigReflectionHysteresis)

start_test_now

May be used to manually start a cable test. ATTENTION: If the port is in link up status it will be forced to link down first. This will disrupt the current data traffic. Therefore, type start_test_now = CONFIRM.

Action Excecute command with parameter string max. 10 characters.

OID 1.3.6.1.4.1.3181.10.6.1.31.6.1.6 (cableTestConfigStartTestNow)

©2026 MICROSENS GmbH & Co. KG - Hamm/Germany - www.microsens.com

create_reference	Is used to start a OTDR reference measurement. Only applies to optical cables with the required SFP installed. Type create_reference = CONFIRM. **Action** Excecute command with parameter string max. 10 characters. **OID** 1.3.6.1.4.1.3181.10.6.1.31.6.1.7 (cableTestConfigCreateReference)
reference_data	The content of this field is created with the create_reference action command and should not be edited manually. **Value** String, max. 256 characters. **OID** 1.3.6.1.4.1.3181.10.6.1.31.6.1.8 (cableTestConfigReferenceData)

Group	**io_signal_config**
Path	Device.Hardware.io_signal_config
Description	

signal_mode	Permit setting of I/O signal LEDs and relays to static or blink mode for increased visualization.		
	Values	*STATIC*	LEDs and relays or either on or off. No blinking
		LED_BLINK	The I/O related LEDs blink when active. The relays switch statically
		RELAY_BLINK	Both, I/O related LEDs and relays blink when active
	OID	1.3.6.1.4.1.3181.10.6.1.31.7.1.2 (ioSignalConfigSignalMode)	
input_1_mode	When this function is activated the external alarm input 1 is monitored. Note: alarm inputs are not available in all product versions.		
	Values	*DISABLED*	This input is not monitored and also not updated in SmartOffice.
		ALARM_WHEN_HIGH	An alarm is raised when the signal is level is high. In SmartOffice the sensor value turns active when input level is high.
		ALARM_WHEN_LOW	An alarm is raised when the signal is low (GND) or not connected. In SmartOffice the sensor value turns active when input level is low. (inverted)
	OID	1.3.6.1.4.1.3181.10.6.1.31.7.1.3 (ioSignalConfigInput1Mode)	
input_1_name	A customer specific name can be specified for input 1. This name will appear in the associated event messages. The name (up to the first blank) determines the attribute used in SmartOffice context.		
	Value	String, max. 32 characters.	
	OID	1.3.6.1.4.1.3181.10.6.1.31.7.1.4 (ioSignalConfigInput1Name)	

©2026 MICROSENS GmbH & Co. KG - Hamm/Germany - www.microsens.com

input_2_mode

When this function is activated the external alarm input 2 is monitored. Note: alarm inputs are not available in all product versions.

Values

DISABLED	This input is not monitored and also not updated in SmartOffice.
ALARM_WHEN_HIGH	An alarm is raised when the signal is level is high. In SmartOffice the sensor value turns active when input level is high.
ALARM_WHEN_LOW	An alarm is raised when the signal is low (GND) or not connected. In SmartOffice the sensor value turns active when input level is low. (inverted)

OID 1.3.6.1.4.1.3181.10.6.1.31.7.1.5 (ioSignalConfigInput2Mode)

input_2_name

A customer specific name can be specified for input 2. This name will appear in the associated event messages. The name (up to the first blank) determines the attribute used in SmartOffice context.

Value String, max. 32 characters.

OID 1.3.6.1.4.1.3181.10.6.1.31.7.1.6 (ioSignalConfigInput2Name)

output_1_trigger

Defines on which condition the alarm relay 1 is activated. Note: alarm relays are not available in all product versions.

Values

DISABLED	The relay is not energized. Normal when relay feature is not used
WHILE_RUNNING	The relay is always energized while the system in operating but will turn off when all power is lost. This may be used to indicate complete power outage or major system failure. The relay will not blink in this mode regardless of signal_mode setting. The relay led indicates green.
REDUNDANCY_FAIL	The relay is energized when a redundant power supply is failing but the system is still operating on another supply.
HIGH_TEMP	The relay is energized when the climate_level is HIGH or worse to indicate a hot environment. This could be used to control external ventilation.
OFF	The relay is not energized. The associated LED turns green and does not blink. This mode is intended for script usage.
ON	The relay is energized and the associated LED turns red. When blink mode is used, the relay will blink as well. This mode is intended for script usage.
SMART_OFFICE	The relay is made available as actor and can be used by the SmartOffice sub system like any other actor.

OID 1.3.6.1.4.1.3181.10.6.1.31.7.1.7 (ioSignalConfigOutput1Trigger)

output_1_name

A customer specific name can be specified for alarm output 1. This name will appear in the associated event messages. The name (up to the first blank) determines the attribute used in SmartOffice context.

Value String, max. 32 characters.

OID 1.3.6.1.4.1.3181.10.6.1.31.7.1.8 (ioSignalConfigOutput1Name)

©2026 MICROSENS GmbH & Co. KG - Hamm/Germany - www.microsens.com

output_2_trigger

Defines on which condition the alarm relay 2 is activated. Note: alarm relays are not available in all product versions.

Values

DISABLED	The relay is not energized. Normal when relay feature is not used
WHILE_RUNNING	The relay is always energized while the system in operating but will turn off when all power is lost. This may be used to indicate complete power outage or major system failure. The relay will not blink in this mode regardless of signal_mode setting. The relay led indicates green.
REDUNDANCY_FAIL	The relay is energized when a redundant power supply is failing but the system is still operating on another supply.
HIGH_TEMP	The relay is energized when the climate_level is HIGH or worse to indicate a hot environment. This could be used to control external ventilation.
OFF	The relay is not energized. The associated LED turns green and does not blink. This mode is intended for script usage.
ON	The relay is energized and the associated LED turns red. When blink mode is used, the relay will blink as well. This mode is intended for script usage.
SMART_OFFICE	The relay is made available as actor and can be used by the SmartOffice sub system like any other actor.

OID 1.3.6.1.4.1.3181.10.6.1.31.7.1.9 (ioSignalConfigOutput2Trigger)

output_2_name

A customer specific name can be specified for alarm output 2. This name will appear in the associated event messages. The name (up to the first blank) determines the attribute used in SmartOffice context.

Value String, max. 32 characters.

OID 1.3.6.1.4.1.3181.10.6.1.31.7.1.10 (ioSignalConfigOutput2Name)

Group **ptp_config**

Path Device.Hardware.ptp_config

Description The Precision Time Protocol conveys precise time information through an IP network according to IEEE 1588v2.

enable_ptp

General enable the Precision Time Protocol function.

Values enabled, disabled

OID 1.3.6.1.4.1.3181.10.6.1.31.8.1.2 (ptpConfigEnablePtp)

show_summary

Display a summary of the PTP port status.

Action Excecute command.

OID 1.3.6.1.4.1.3181.10.6.1.31.8.1.3 (ptpConfigShowSummary)

©2026 MICROSENS GmbH & Co. KG - Hamm/Germany - www.microsens.com

vlan_id	Defines the VLAN ID used for PTP traffic. Set to 0 if VLAN is unused. **Value** Number in range 0-4095 **OID** 1.3.6.1.4.1.3181.10.6.1.31.8.1.4 (ptpConfigVlanId)
master_ports	Select which port(s) are forwarding the network clock downstream. port/slot format is expected. A comma separated list can be specified. **Value** PORTMASK0-0xFFFFFFFF **OID** 1.3.6.1.4.1.3181.10.6.1.31.8.1.5 (ptpConfigMasterPorts)
slave_ports	Select which port(s) are being connected to a network and can receive the network clock. port/slot format is expected. A comma separated list can be specified. **Value** PORTMASK0-0xFFFFFFFF **OID** 1.3.6.1.4.1.3181.10.6.1.31.8.1.6 (ptpConfigSlavePorts)
clock_type	Determines handling of PTP messaging. See the description of the options. **Values** *TRANSPARENT* Forwards PTP messages without altering the master-slave hierarchy, but adds the residence time in END_TO_END mode and link delay in PEER_TO_PEER mode, to the correction field. *BOUNDARY* Terminates PTP messages on each port and maintains a separate PTP instance per port. Participates in Best Master Clock Algorithm **OID** 1.3.6.1.4.1.3181.10.6.1.31.8.1.7 (ptpConfigClockType)
delay_mechanism	Define how delay compensation is calculated. **Values** *END_TO_END* Delay is calculated end-to-end (from master to slave) using Delay_Req / Delay_Resp messages. *PEER_TO_PEER* Delay is calculated on link between two directly connected PTP devices using pDelayRequest/ pDelayResponse messages. **OID** 1.3.6.1.4.1.3181.10.6.1.31.8.1.8 (ptpConfigDelayMechanism)

©2026 MICROSENS GmbH & Co. KG - Hamm/Germany - www.microsens.com

15.5 Hardware Status Parameters

Group	**General Parameters**		
Path	Device.Hardware		
power_supply_1_status	Displays state of primary supply or only supply for single supply systems.		
	Values	*OK*	Normal operating condition
		OVERLOAD	Too much current drawn or short circuit
		INPUT_LOW	Input voltage too low
		FUSE_FAIL	Fuse blown
		NOT_APPLICABLE	Secondary power supply is not an option for this product
		UNMANAGED	Power supply monitoring for this supply is disabled
		NOT_INSTALLED	Power supply is not installed
	OID	1.3.6.1.4.1.3181.10.6.1.31.100 (hardwarePowerSupply1Status)	
power_supply_2_status	Displays state of secondary supply if available.		
	Values	*OK*	Normal operating condition
		OVERLOAD	Too much current drawn or short circuit
		INPUT_LOW	Input voltage too low
		FUSE_FAIL	Fuse blown
		NOT_APPLICABLE	Secondary power supply is not an option for this product
		UNMANAGED	Power supply monitoring for this supply is disabled
		NOT_INSTALLED	Power supply is not installed
	OID	1.3.6.1.4.1.3181.10.6.1.31.101 (hardwarePowerSupply2Status)	
running_on_poe	When set the unit currently operates on the PD input via PoE.		
	Values	true, false	
	OID	1.3.6.1.4.1.3181.10.6.1.31.102 (hardwareRunningOnPoe)	
fan_status	Displays state of cooling fan. Indicates UNUSED in fanless devices.		
	Values	*UNUSED*	Fanless device without internal cooling fan or a device with unmanaged fan.
		OK	Fan cooled device. Fan appears to be working fine
		DEGRADED	Fan is operating with reduced effectiveness. Check soon
		FAIL	Fan has failed and insufficient cooling is available. Replace fan as soon as possible
		MISSING	Fan cooled device but fan is not installed
	OID	1.3.6.1.4.1.3181.10.6.1.31.103 (hardwareFanStatus)	

©2026 MICROSENS GmbH & Co. KG - Hamm/Germany - www.microsens.com

sd_card_status	Current status of SD-card. **Values** *EMPTY* No SD card is inserted *INSERTED* SD card is inserted *WRITE_PROTECTED* SD card cannot be written *WRITING* Currently being written. Do not remove **OID** 1.3.6.1.4.1.3181.10.6.1.31.104 (hardwareSdCardStatus)
num_of_ports	Total number of Ethernet ports this hardware offers. **Value** Number in range 0-255 **OID** 1.3.6.1.4.1.3181.10.6.1.31.105 (hardwareNumOfPorts) 1.3.6.1.2.1.17.1.2 (dot1dBaseNumPorts)
mask_of_existing_ports	Set bit for each port that physically existing and could be in use. **Value** PORTMASK0-0xFFFFFFFF **OID** 1.3.6.1.4.1.3181.10.6.1.31.106 (hardwareMaskOfExistingPorts)
mask_of_sfp_ports	Marks which ports support SFPs. **Value** PORTMASK0-0xFFFFFFFF **OID** 1.3.6.1.4.1.3181.10.6.1.31.107 (hardwareMaskOfSfpPorts)
mask_of_poe_ports	Marks which ports support PoE output. **Value** PORTMASK0-0xFFFFFFFF **OID** 1.3.6.1.4.1.3181.10.6.1.31.108 (hardwareMaskOfPoePorts)

Group	**slot_info**, for all device slots[0..7]
Path	Device.Hardware.slot_info[slot]
Description	This section indicates which modules are inserted in the optional extension slots.

©2026 MICROSENS GmbH & Co. KG - Hamm/Germany - www.microsens.com

board_type	General type of board function		
	Values	*NOT_PRESENT*	Possible slot is not installed
		UNDEFINED	Unspecified features
		POWER	Power supply module
		CPU	Main CPU module
		PORT	Port
		IO	Input/Output module
		10G_PORT	10G switch port module
		5G_10G_PORT	1/2.5/5/10G switch port module
	OID	1.3.6.1.4.1.3181.10.6.1.31.110.1.2 (slotInfoBoardType)	
board_id	This identifies the board type for internal operation.		
	Value	Number in range 0-0xFFFFFFFF	
	OID	1.3.6.1.4.1.3181.10.6.1.31.110.1.3 (slotInfoBoardId)	
version_bits	Version bits from hardware or backplane.		
	Value	Number in range 0-255	
	OID	1.3.6.1.4.1.3181.10.6.1.31.110.1.4 (slotInfoVersionBits)	

Group	**port_info**, for each port[0..24]
Path	Device.Hardware.port_info[port]
Description	Used to map physical to logical port ids.

system_slot	Describes on which system slot this port index is located.	
	Value	Number in range 0-255
	OID	1.3.6.1.4.1.3181.10.6.1.31.111.1.2 (portInfoSystemSlot)
switch_port	Describes on which switch port this port index is located.	
	Value	Number in range 0-255
	OID	1.3.6.1.4.1.3181.10.6.1.31.111.1.3 (portInfoSwitchPort) 1.3.6.1.2.1.105.1.1.1.7 (pethPsePortPowerPriority)
user_slot	Slot number as seen by customer.	
	Value	Number in range 0-255
	OID	1.3.6.1.4.1.3181.10.6.1.31.111.1.4 (portInfoUserSlot)
user_port	Port number as seen by customer.	
	Value	Number in range 0-255
	OID	1.3.6.1.4.1.3181.10.6.1.31.111.1.5 (portInfoUserPort)

©2026 MICROSENS GmbH & Co. KG - Hamm/Germany - www.microsens.com

snmp_port	Slot and port representation as used in SNMP. Formula is Slot*100 + Port. **Value** Number in range 0-65535 **OID** 1.3.6.1.4.1.3181.10.6.1.31.111.1.6 (portInfoSnmpPort) 1.3.6.1.2.1.2.2.1.1 (ifIndex) 1.3.6.1.2.1.10.7.2.1.1 (dot3StatsIndex) 1.3.6.1.2.1.16.1.1.1.1 (etherStatsIndex) 1.0.8802.1.1.2.1.3.7.1.1 (lldpLocPortNum) 1.3.6.1.2.1.105.1.1.1.2 (pethPsePortIndex) 1.3.6.1.2.1.17.1.4.1.2 (dot1dBasePortIfIndex) 1.3.6.1.2.1.17.1.4.1.1 (dot1dBasePort)
snmp_instance	Port instance counting from 0 to number of ports **Value** Number in range 0-255 **OID** 1.3.6.1.4.1.3181.10.6.1.31.111.1.7 (portInfoSnmpInstance) 1.3.6.1.2.1.17.2.15.1.1 (dot1dStpPort)
hardware_port	Port number as used internally. Ports may not be in sequential order. **Value** Number in range 0-255 **OID** 1.3.6.1.4.1.3181.10.6.1.31.111.1.8 (portInfoHardwarePort)
interface_type	Identifies port as copper or optical. Also used for snmp ifType definition **Values** *COPPER* Normal copper interface *OPTICAL* Optical interface *DUAL_MEDIA* Copper and optical interface supported **OID** 1.3.6.1.4.1.3181.10.6.1.31.111.1.9 (portInfoInterfaceType) 1.3.6.1.2.1.2.2.1.3 (ifType)

©2026 MICROSENS GmbH & Co. KG - Hamm/Germany - www.microsens.com

properties	Describes which functions the port can support.		
	Values	*NOT_DETECTED*	Default value. Port not yet discovered or not existing
		INTERNAL	This is an internal port no accessible to the user
		10_MB	This port is capable of running at 10Mbit/s
		100_MB	This port is capable of running at 100Mbit/s
		1000_MB	This port is capable of running at 1000Mbit/s
		RJ45	This port uses as RJ45 connector
		SFP	This port uses a pluggable SFP
		1X9	This port uses fixed optical SC connector
		POE	This port is capable to supply Power over Ethernet (PoE)
		POE_PLUS	This port is capable to supply Power over Ethernet Extended (PoE+)
		PD	This port can accept PoE to operate the device
		DUAL_MEDIA	This is a dual media port for optical or electrical operation
		LINK_PORT	This is a link port which should not be disabled
		CSFP	This port is the second port of double port compact SFP
		POE_PLUS_PLUS	This port is capable to supply 4 pair Power over Ethernet Extended (PoE++)
		10_GB	This port is capable of running at 10Gbit/s
		5_GB	This port is capable of running at 5Gbit/s
		2500_MB	This port is capable of running at 2.5Gbit/s
	OID	1.3.6.1.4.1.3181.10.6.1.31.111.1.10 (portInfoProperties)	

Group	**port_names**, for each port[0..24]
Path	Device.Hardware.port_names[port]
Description	This table contains additional port information names suitable for use in snmp.

cli_name	Port name as used in cli and as required for ifName (read only)	
	Value	String, max. 8 characters.
	OID	1.3.6.1.4.1.3181.10.6.1.31.112.1.2 (portNamesCliName) 1.3.6.1.2.1.31.1.1.1.1 (ifName) 1.0.8802.1.1.2.1.3.7.1.3 (lldpLocPortId)
port_description	Port name as required for ifDescription (read only)	
	Value	String, max. 32 characters.
	OID	1.3.6.1.4.1.3181.10.6.1.31.112.1.3 (portNamesPortDescription) 1.3.6.1.2.1.2.2.1.2 (ifDescr)

©2026 MICROSENS GmbH & Co. KG - Hamm/Germany - www.microsens.com

Group	**port_leds**, for all ports[0..31]
Path	Device.Hardware.port_leds[port]
Description	This section indicates the state of all port related LEDs.

ethernet_color

Ethernet Link LED.

Values	*OFF*	LED is off
	BLUE	LED indicates blue
	GREEN	LED indicates green
	RED	LED indicates red
	ORANGE	LED indicates orange (yellow)
	CYAN	LED indicates cyan
	MAGENTA	LED indicates magenta
	WHITE	LED indicates white
	NO_LED	This LED does physically not exist in this device
OID	1.3.6.1.4.1.3181.10.6.1.31.113.1.2 (portLedsEthernetColor)	

ethernet_blinking

Ethernet Link LED.

Values	true, false
OID	1.3.6.1.4.1.3181.10.6.1.31.113.1.3 (portLedsEthernetBlinking)

poe_color

Power over Ethernet LED. For optical ports this indicates signal detect status.

Values	*OFF*	LED is off
	BLUE	LED indicates blue
	GREEN	LED indicates green
	RED	LED indicates red
	ORANGE	LED indicates orange (yellow)
	CYAN	LED indicates cyan
	MAGENTA	LED indicates magenta
	WHITE	LED indicates white
	NO_LED	This LED does physically not exist in this device
OID	1.3.6.1.4.1.3181.10.6.1.31.113.1.4 (portLedsPoeColor)	

poe_blinking

Power over Ethernet LED. For optical ports this indicates signal detect status.

Values	true, false
OID	1.3.6.1.4.1.3181.10.6.1.31.113.1.5 (portLedsPoeBlinking)

©2026 MICROSENS GmbH & Co. KG - Hamm/Germany - www.microsens.com

Group	**cable_test_status**, for each port[0..24]
Path	Device.Hardware.cable_test_status[port]
Description	This table display the result of the last cable test. Values are only available for copper ports while a link is down and if the cable test function is enabled or for optical ports with an OTDR SFP present

update_time_stamp

Indicates the time when this record was last updated.

Value String, max. 32 characters.

OID 1.3.6.1.4.1.3181.10.6.1.31.115.1.2 (cableTestStatusUpdateTimeStamp)

pair_0_state

Indicates line termination test results for wire pair 0 (Pins 1/2). Applies to copper only.

Values

NOT_AVAILABLE	No data available at this time
PAIR_OK	A valid termination is detected. A cable seems to be plugged-in
PAIR_OPEN	No cable termination detected. No cable seems to be plugged-in or a cable is broken
SAME_PAIR_SHORT	A short circuit in this wire pair is detected
CROSS_PAIR_SHORT	A short circuit with another wire pair is detected
TERMINATION_LOW	A weak termination is detected.
TERMINATION_HIGH	A too high termination is detected.

OID 1.3.6.1.4.1.3181.10.6.1.31.115.1.3 (cableTestStatusPair0State)

pair_0_distance_to_fault

Distance to fault on wire pair 0 in centimeters. Indicates 0 when no fault is detected or the function is unused. Applies to copper only.

Value Number in range 0-65535

OID 1.3.6.1.4.1.3181.10.6.1.31.115.1.4 (cableTestStatusPair0DistanceToFault)

pair_1_state

Indicates line termination test results for wire pair 1 (Pins 3/6). Applies to copper only.

Values

NOT_AVAILABLE	No data available at this time
PAIR_OK	A valid termination is detected. A cable seems to be plugged-in
PAIR_OPEN	No cable termination detected. No cable seems to be plugged-in or a cable is broken
SAME_PAIR_SHORT	A short circuit in this wire pair is detected
CROSS_PAIR_SHORT	A short circuit with another wire pair is detected
TERMINATION_LOW	A weak termination is detected.
TERMINATION_HIGH	A too high termination is detected.

OID 1.3.6.1.4.1.3181.10.6.1.31.115.1.5 (cableTestStatusPair1State)

©2026 MICROSENS GmbH & Co. KG - Hamm/Germany - www.microsens.com

pair_1_distance_to_fault	Distance to fault on wire pair 1 in centimeters. Indicates 0 when no fault is detected or the function is unused. Applies to copper only. **Value** Number in range 0-65535 **OID** 1.3.6.1.4.1.3181.10.6.1.31.115.1.6 (cableTestStatusPair1DistanceToFault)
pair_2_state	Indicates line termination test results for wire pair 2 (Pins 4/5). Applies to copper only. **Values** *NOT_AVAILABLE* No data available at this time *PAIR_OK* A valid termination is detected. A cable seems to be plugged-in *PAIR_OPEN* No cable termination detected. No cable seems to be plugged-in or a cable is broken *SAME_PAIR_SHORT* A short circuit in this wire pair is detected *CROSS_PAIR_SHORT* A short circuit with another wire pair is detected *TERMINATION_LOW* A weak termination is detected. *TERMINATION_HIGH* A too high termination is detected. **OID** 1.3.6.1.4.1.3181.10.6.1.31.115.1.7 (cableTestStatusPair2State)
pair_2_distance_to_fault	Distance to fault on wire pair 2 in centimeters. Indicates 0 when no fault is detected or the function is unused. Applies to copper only. **Value** Number in range 0-65535 **OID** 1.3.6.1.4.1.3181.10.6.1.31.115.1.8 (cableTestStatusPair2DistanceToFault)
pair_3_state	Indicates line termination test results for wire pair 3 (Pins 7/8). Applies to copper only. **Values** *NOT_AVAILABLE* No data available at this time *PAIR_OK* A valid termination is detected. A cable seems to be plugged-in *PAIR_OPEN* No cable termination detected. No cable seems to be plugged-in or a cable is broken *SAME_PAIR_SHORT* A short circuit in this wire pair is detected *CROSS_PAIR_SHORT* A short circuit with another wire pair is detected *TERMINATION_LOW* A weak termination is detected. *TERMINATION_HIGH* A too high termination is detected. **OID** 1.3.6.1.4.1.3181.10.6.1.31.115.1.9 (cableTestStatusPair3State)
pair_3_distance_to_fault	Distance to fault on wire pair 3 in centimeters. Indicates 0 when no fault is detected or the function is unused. Applies to copper only. **Value** Number in range 0-65535 **OID** 1.3.6.1.4.1.3181.10.6.1.31.115.1.10 (cableTestStatusPair3DistanceToFault)

©2026 MICROSENS GmbH & Co. KG - Hamm/Germany - www.microsens.com

reflection_value	A unitless value that indicates a measure of reflection level. For difficult to detect actively terminated devices perform a measurement with remotely plugged-in and then unplugged cable. Note the reflection values an choose a value in the middle as reflection_threshold configuration value. Applies to copper only. **Value** Number in range 0-65535 **OID** 1.3.6.1.4.1.3181.10.6.1.31.115.1.11 (cableTestStatusReflectionValue)
cable_status	Indicates the concluded status summary. Applies to copper only. **Values** *NOT_AVAILABLE* — No data available at this time *NO_CABLE* — No valid termination is detected. There seems to be no cable plugged-in *PLUGGED_IN_LOCALLY* — A cable seems to be locally plugged-in. Probably the remote cable end is unplugged. When the remote device is using an active termination hardware then the detection may be incorrect. *PLUGGED_IN_REMOTELY* — A cable is locally plugged-in. It also seems to be plugged-in remotely. The measured reflection_value is less than configured reflection_limit. This condition may occur with active terminated devices. *TERMINATED_CABLE* — A cable is be plugged-in and least one cable pair is terminated. This indicates that the cable is plugged in at the far end as well. *TERMINATION_TOO_LOW* — Termination appears too low *DEFECTIVE* — At least one cable pair is in an error condition **OID** 1.3.6.1.4.1.3181.10.6.1.31.115.1.12 (cableTestStatusCableStatus)
current_otdr_reflections	Number and location of currently detected reflections for an active OTDR SFP on this port. **Value** String, max. 256 characters. **OID** 1.3.6.1.4.1.3181.10.6.1.31.115.1.13 (cableTestStatusCurrentOtdrReflections)

©2026 MICROSENS GmbH & Co. KG - Hamm/Germany - www.microsens.com

Group	**device_leds**
Path	Device.Hardware.device_leds
Description	This section indicates the state of all LEDs which are not port related. Please note: Not every unit offers all LEDs.

system_1_color

This status corresponds to 'sys' LED on some devices.

Values

OFF	LED is off
BLUE	LED indicates blue
GREEN	LED indicates green
RED	LED indicates red
ORANGE	LED indicates orange (yellow)
CYAN	LED indicates cyan
MAGENTA	LED indicates magenta
WHITE	LED indicates white
NO_LED	This LED does physically not exist in this device

OID 1.3.6.1.4.1.3181.10.6.1.31.114.1.2 (deviceLedsSystem1Color)

system_1_blinking

This status corresponds to 'sys' LED on some devices.

Values true, false

OID 1.3.6.1.4.1.3181.10.6.1.31.114.1.3 (deviceLedsSystem1Blinking)

system_2_color

Displays external management activity.

Values

OFF	LED is off
BLUE	LED indicates blue
GREEN	LED indicates green
RED	LED indicates red
ORANGE	LED indicates orange (yellow)
CYAN	LED indicates cyan
MAGENTA	LED indicates magenta
WHITE	LED indicates white
NO_LED	This LED does physically not exist in this device

OID 1.3.6.1.4.1.3181.10.6.1.31.114.1.4 (deviceLedsSystem2Color)

system_2_blinking

Displays external management activity.

Values true, false

OID 1.3.6.1.4.1.3181.10.6.1.31.114.1.5 (deviceLedsSystem2Blinking)

©2026 MICROSENS GmbH & Co. KG - Hamm/Germany - www.microsens.com

power_on_1_color	This status corresponds to 'on' LED on some devices.		
	Values	*OFF*	LED is off
		BLUE	LED indicates blue
		GREEN	LED indicates green
		RED	LED indicates red
		ORANGE	LED indicates orange (yellow)
		CYAN	LED indicates cyan
		MAGENTA	LED indicates magenta
		WHITE	LED indicates white
		NO_LED	This LED does physically not exist in this device
	OID	1.3.6.1.4.1.3181.10.6.1.31.114.1.6 (deviceLedsPowerOn1Color)	
power_on_1_blinking	This status corresponds to 'on' LED on some devices.		
	Values	true, false	
	OID	1.3.6.1.4.1.3181.10.6.1.31.114.1.7 (deviceLedsPowerOn1Blinking)	
power_on_2_color	Alternative power input LED.		
	Values	*OFF*	LED is off
		BLUE	LED indicates blue
		GREEN	LED indicates green
		RED	LED indicates red
		ORANGE	LED indicates orange (yellow)
		CYAN	LED indicates cyan
		MAGENTA	LED indicates magenta
		WHITE	LED indicates white
		NO_LED	This LED does physically not exist in this device
	OID	1.3.6.1.4.1.3181.10.6.1.31.114.1.8 (deviceLedsPowerOn2Color)	
power_on_2_blinking	Alternative power input LED.		
	Values	true, false	
	OID	1.3.6.1.4.1.3181.10.6.1.31.114.1.9 (deviceLedsPowerOn2Blinking)	

©2026 MICROSENS GmbH & Co. KG - Hamm/Germany - www.microsens.com

ring_1_color	This LED is used when ring protection is enabled.		
	Values	*OFF*	LED is off
		BLUE	LED indicates blue
		GREEN	LED indicates green
		RED	LED indicates red
		ORANGE	LED indicates orange (yellow)
		CYAN	LED indicates cyan
		MAGENTA	LED indicates magenta
		WHITE	LED indicates white
		NO_LED	This LED does physically not exist in this device
	OID	1.3.6.1.4.1.3181.10.6.1.31.114.1.10 (deviceLedsRing1Color)	
ring_1_blinking	This LED is used when ring protection is enabled.		
	Values	true, false	
	OID	1.3.6.1.4.1.3181.10.6.1.31.114.1.11 (deviceLedsRing1Blinking)	
ring_2_color	This LED is used when ring protection is enabled.		
	Values	*OFF*	LED is off
		BLUE	LED indicates blue
		GREEN	LED indicates green
		RED	LED indicates red
		ORANGE	LED indicates orange (yellow)
		CYAN	LED indicates cyan
		MAGENTA	LED indicates magenta
		WHITE	LED indicates white
		NO_LED	This LED does physically not exist in this device
	OID	1.3.6.1.4.1.3181.10.6.1.31.114.1.12 (deviceLedsRing2Color)	
ring_2_blinking	This LED is used when ring protection is enabled.		
	Values	true, false	
	OID	1.3.6.1.4.1.3181.10.6.1.31.114.1.13 (deviceLedsRing2Blinking)	

©2026 MICROSENS GmbH & Co. KG - Hamm/Germany - www.microsens.com

signal_in_1_color	Indicates status of alarm input 1.		
	Values	*OFF*	LED is off
		BLUE	LED indicates blue
		GREEN	LED indicates green
		RED	LED indicates red
		ORANGE	LED indicates orange (yellow)
		CYAN	LED indicates cyan
		MAGENTA	LED indicates magenta
		WHITE	LED indicates white
		NO_LED	This LED does physically not exist in this device
	OID	1.3.6.1.4.1.3181.10.6.1.31.114.1.14 (deviceLedsSignalIn1Color)	
signal_in_1_blinking	Indicates status of alarm input 1.		
	Values	true, false	
	OID	1.3.6.1.4.1.3181.10.6.1.31.114.1.15 (deviceLedsSignalIn1Blinking)	
signal_in_2_color	Indicates status of alarm input 2.		
	Values	*OFF*	LED is off
		BLUE	LED indicates blue
		GREEN	LED indicates green
		RED	LED indicates red
		ORANGE	LED indicates orange (yellow)
		CYAN	LED indicates cyan
		MAGENTA	LED indicates magenta
		WHITE	LED indicates white
		NO_LED	This LED does physically not exist in this device
	OID	1.3.6.1.4.1.3181.10.6.1.31.114.1.16 (deviceLedsSignalIn2Color)	
signal_in_2_blinking	Indicates status of alarm input 2.		
	Values	true, false	
	OID	1.3.6.1.4.1.3181.10.6.1.31.114.1.17 (deviceLedsSignalIn2Blinking)	

©2026 MICROSENS GmbH & Co. KG - Hamm/Germany - www.microsens.com

signal_out_1_color	Indicates status of alarm relay output 1.		
	Values	*OFF*	LED is off
		BLUE	LED indicates blue
		GREEN	LED indicates green
		RED	LED indicates red
		ORANGE	LED indicates orange (yellow)
		CYAN	LED indicates cyan
		MAGENTA	LED indicates magenta
		WHITE	LED indicates white
		NO_LED	This LED does physically not exist in this device
	OID	1.3.6.1.4.1.3181.10.6.1.31.114.1.18 (deviceLedsSignalOut1Color)	
signal_out_1_blinking	Indicates status of alarm relay output 1.		
	Values	true, false	
	OID	1.3.6.1.4.1.3181.10.6.1.31.114.1.19 (deviceLedsSignalOut1Blinking)	
signal_out_2_color	Indicates status of alarm relay output 2.		
	Values	*OFF*	LED is off
		BLUE	LED indicates blue
		GREEN	LED indicates green
		RED	LED indicates red
		ORANGE	LED indicates orange (yellow)
		CYAN	LED indicates cyan
		MAGENTA	LED indicates magenta
		WHITE	LED indicates white
		NO_LED	This LED does physically not exist in this device
	OID	1.3.6.1.4.1.3181.10.6.1.31.114.1.20 (deviceLedsSignalOut2Color)	
signal_out_2_blinking	Indicates status of alarm relay output 2.		
	Values	true, false	
	OID	1.3.6.1.4.1.3181.10.6.1.31.114.1.21 (deviceLedsSignalOut2Blinking)	

Group	**io_signal_status**
Path	Device.Hardware.io_signal_status
Description	This section is only used for devices which offer external signal inputs and outputs.

©2026 MICROSENS GmbH & Co. KG - Hamm/Germany - www.microsens.com

input_1_alarm_active	Indicates true when the input 1 is logically active. **Values** true, false **OID** 1.3.6.1.4.1.3181.10.6.1.31.116.1.2 (ioSignalStatusInput1AlarmActive)
input_2_alarm_active	Indicates true when the input 2 is logically active. **Values** true, false **OID** 1.3.6.1.4.1.3181.10.6.1.31.116.1.3 (ioSignalStatusInput2AlarmActive)
output_1_relay_active	Indicates true when the output 1 relay is activated. **Values** true, false **OID** 1.3.6.1.4.1.3181.10.6.1.31.116.1.4 (ioSignalStatusOutput1RelayActive)
output_2_relay_active	Indicates true when the output 2 relay is activated. **Values** true, false **OID** 1.3.6.1.4.1.3181.10.6.1.31.116.1.5 (ioSignalStatusOutput2RelayActive)

Group	**memory_utilization**
Path	Device.Hardware.memory_utilization
Description	The table indicates memory usage
flash_free_megabyte	Amount of free flash memory in MB **Value** Number in range 0-0xFFFFFFFF **OID** 1.3.6.1.4.1.3181.10.6.1.31.118.1.2 (memoryUtilizationFlashFreeMegabyte)
flash_used_percent	Amount of flash memory used up in percent **Value** Number in range 0-0xFFFFFFFF **OID** 1.3.6.1.4.1.3181.10.6.1.31.118.1.3 (memoryUtilizationFlashUsedPercent)
ram_disk_free_megabyte	Amount of free ram disk memory in MB **Value** Number in range 0-0xFFFFFFFF **OID** 1.3.6.1.4.1.3181.10.6.1.31.118.1.4 (memoryUtilizationRamDiskFreeMegabyte)

©2026 MICROSENS GmbH & Co. KG - Hamm/Germany - www.microsens.com

ram_disk_used_percent	Amount of ram disk memory used up in percent **Value** Number in range 0-0xFFFFFFFF **OID** 1.3.6.1.4.1.3181.10.6.1.31.118.1.5 (memoryUtilizationRamDiskUsedPercent)

©2026 MICROSENS GmbH & Co. KG - Hamm/Germany - www.microsens.com

16 IP Stack

16.1 Key Features

Dual Stack

Parallel handling of IPv4 and IPv6 protocol.

Future-proof.

IPv4 Stack

Internet Protocol v4 handling with support of IPv4, ARP, DHCP, ICMP.

DHCP Options 66/67

Unit configuration or software updates controlled via DHCP option 66/67 mechanism. A CLI script can be downloaded which in turn may request further download or configuration changes

In large networks updates can be automated to take place as soon as a unit goes online. The script is a very powerful tool.

Ping, Trace Route

Standard IP test functions like Ping to check reachability and trace route to visualize packet routing is available. Since 10.6.1d these are also configurable including packet size and number of pings.

Essential tools in diagnosing basic IP connectivity.

IPv6 Management Access

Internet Protocol v6 handling with support of IPv6, DHCPv6, ICMPv6, NDP. IPv6 access to WEB, CLI, SNMP and NMP.

Permits management of unit via IPv6 access mechanisms.

IPv6 Transport

IPv6 traffic can be transported via the switch. Filter options for enhanced security available.

Switch may be used latest type of Ethernet networks.

Dynamic ARP Inspection

(Not available with hardware 1.5 / Only available on ports [2/*] with hardware 1.6)
Incoming ARPs are being verfied against IP/MAC relation database provided by DHCP snooping. In addition an access list (ACL) is used for verification. In addition too many ARPs can lead to the port being blocked to prevent ARP attacks.

Dynamic ARP Inspection helps make sure of user integrity by preventing malicious users from exploiting the insecure nature of the ARP protocol.

Secondary IPv4 Address

A secondary IP address may be assigned under which the management is alternatively available.

The default address for outgoing packets is user selectable.

©2026 MICROSENS GmbH & Co. KG - Hamm/Germany - www.microsens.com

Secondary static DNS Address

A secondary DNS address may be assigned

16.2 Functional Description

The firmware implements dual stack functionality, supporting IPv4 and IPv6 simutaneously. The device internal management agent can be assigned with an IPv4 and IPv6 address and communicate via both protocols.

16.2.1 IPv4 Stack

For IPv4 access, static IP address, subnet mask and gateway can be configured. Alternatively these settings can be retrieved via DHCP.

©2026 MICROSENS GmbH & Co. KG - Hamm/Germany - www.microsens.com

16.3 IP CLI Command Reference

The following table lists all CLI commands applicable for this feature section. For each parameter, the access mode is given:

R = Read Only, R/W = Read/Write, X = Executable Action.

Please note that the effective access rights are dependent on the login level of the user.

Category	Group	Table	Parameter	Options	Access	Description
Device.						
	ip.					Basic device global IP configuration for management access.
			ping_test		X	Supply an IP address to ping for reachability testing.
			trace_route		X	Supply an IP address to trace route testing.
			dns_lookup		X	Supply a hostname or web address to query for its IP address.
			arp_table		X	Displays the content of the ARP table used for management access.
			hostname		R/W	Defines the local hostname.
			domain_name		R/W	Defines an optional domain name used during name resolution.
			local_mtu		R/W	Defines MTU value for locally generated data.
			ip_version_priority		R/W	The priority applies when a name server is queried or in general when a hostname is used and both IPv4 and IPv6 could be used.
		v4_config.				This section configures IP version 4 fixed IP settings or enables use of DHCP alternatively.
			dhcp_mode		R/W	Enable DHCP to automatically retrieve an IP address and subnet mask. Also DHCP may be used to supply a CLI script file reference to be used on assignment.
			static_device_ip		R/W	Static device IP address. When DHCP is enabled, DHCP has preference over this setting.
			static_subnet_mask		R/W	Static subnet mask. When DHCP is enabled, DHCP has preference over this setting.
			static_gateway		R/W	Static default gateway IP address. When DHCP is enabled, DHCP has preference over this setting.
			static_dns_server		R/W	Static domain name server IP address. When DHCP is enabled, DHCP has preference over this setting.
			alternative_dns_server		R/W	Alternative static domain name server IP address. When DHCP is enabled, DHCP has preference over this setting.
			secondary_device_ip		R/W	Alternative IP address for management access. Not required in most installations.
			secondary_subnet_mask		R/W	This subnet mask applies to secondary IP address.

©2026 MICROSENS GmbH & Co. KG - Hamm/Germany - www.microsens.com

	default_address_selection	R/W	This parameter defines which own IP address is used for outgoing packets generated by the device. This only applies when a secondary_device_ip is configured.
v6_config.			This section configures IP version 6 fixed IP settings or enables use of automatic configuration alternatively.
	enable_ipv6	R/W	General enable of IPv6 management access functionality.
	enable_icmp_auto_address	R/W	Decides if an ICMP assigned IPv6 address is accepted.
	enable_dhcp_auto_address	R/W	Decides if an DHCP assigned IPv6 address is accepted.
	static_dns_server	R/W	Static domain name server reached via IPv6 address.
	alternative_dns_server	R/W	Alternative static domain name server IPv6 address.
	static_gateway	R/W	Static default gateway IP address.
v6_address[DYNAMIC].			Defines as many static IPv6 address entries as desired.
	ip	R/W	Static IPv6 address in CIDR notation with definition of the subnet size. Example: 2001:db8:1111::123/64
v4_status.			This section shows a summary of IPv4 settings as they are currently active. These may reflect the statically configured values or may be dynamically assigned using DHCP.
	dynamic_device_ip	R	Currently used device IP address.
	dynamic_subnet_mask	R	Currently used subnet mask.
	dynamic_gateway	R	Currently used gateway IP address.
	dynamic_dns_server_1	R	Currently used domain name server IP address.
	dynamic_dns_server_2	R	Alternate currently used domain name server IP address.
	dynamic_dns_server_3	R	Alternate currently used domain name server IP address.
	dynamic_dns_server_4	R	Alternate currently used domain name server IP address.
	outgoing_device_ip	R	Reflects the value v4_config.default_address_selection setting.
v6_base_status.			This section shows a summary of IPv6 settings as they are currently active. These may reflect the statically configured values or may be dynamically assigned using DHCP or auto_address.
	dynamic_gateway	R	Currently used gateway IP address.
	dynamic_dns_server_1	R	Currently used domain name server IP address.
	dynamic_dns_server_2	R	Alternate currently used domain name server IP address.
	dynamic_dns_server_3	R	Alternate currently used domain name server IP address.
	dynamic_dns_server_4	R	Alternate currently used domain name server IP address.

©2026 MICROSENS GmbH & Co. KG - Hamm/Germany - www.microsens.com

v6_status[8].			This section shows a summary of IPv6 settings as they are currently active. These may reflect the statically configured values or may be dynamically assigned using DHCP or ICMP.
	ip	R	IPv6 address.
	scope	R	Indicates the scope this IP is valid.
	state	R	Indicates the state of this IP.

©2026 MICROSENS GmbH & Co. KG - Hamm/Germany - www.microsens.com

16.4 IP Configuration Parameters

Group	**General Parameters**	
Path	Device.IP	
ping_test	Supply an IP address to ping for reachability testing.	
	Action	Excecute command with parameter string max. 64 characters.
	OID	1.3.6.1.4.1.3181.10.6.1.22.1 (ipPingTest)
trace_route	Supply an IP address to trace route testing.	
	Action	Excecute command with parameter string max. 64 characters.
	OID	1.3.6.1.4.1.3181.10.6.1.22.2 (ipTraceRoute)
dns_lookup	Supply a hostname or web address to query for its IP address.	
	Action	Excecute command with parameter string max. 64 characters.
	OID	1.3.6.1.4.1.3181.10.6.1.22.3 (ipDnsLookup)
arp_table	Displays the content of the ARP table used for management access.	
	Action	Excecute command.
	OID	1.3.6.1.4.1.3181.10.6.1.22.4 (ipArpTable)
hostname	Defines the local hostname.	
	Value	String, max. 64 characters.
	OID	1.3.6.1.4.1.3181.10.6.1.22.5 (ipHostname)
domain_name	Defines an optional domain name used during name resolution.	
	Value	String, max. 128 characters.
	OID	1.3.6.1.4.1.3181.10.6.1.22.6 (ipDomainName)
local_mtu	Defines MTU value for locally generated data.	
	Value	Number in range 128-9000
	OID	1.3.6.1.4.1.3181.10.6.1.22.7 (ipLocalMtu)
ip_version_priority	The priority applies when a name server is queried or in general when a hostname is used and both IPv4 and IPv6 could be used.	
	Values	*IP_V4_PRIORITY* Prefer IPv4 protocol *IP_V6_PRIORITY* Prefer IPv6 protocol
	OID	1.3.6.1.4.1.3181.10.6.1.22.8 (ipIpVersionPriority)

©2026 MICROSENS GmbH & Co. KG - Hamm/Germany - www.microsens.com

Group	**v6_address**, dynamical size
Path	Device.IP.v6_address
Description	Defines as many static IPv6 address entries as desired.

ip	Static IPv6 address in CIDR notation with definition of the subnet size. Example: 2001:db8:1111::123/64	
	Value	String, max. 50 characters.
	OID	1.3.6.1.4.1.3181.10.6.1.22.11.1.2 (v6AddressIp)

Group	**v4_config**
Path	Device.IP.v4_config
Description	This section configures IP version 4 fixed IP settings or enables use of DHCP alternatively.

dhcp_mode	Enable DHCP to automatically retrieve an IP address and subnet mask. Also DHCP may be used to supply a CLI script file reference to be used on assignment.		
	Values	*DISABLED*	Do not use DHCP. Use static values instead
		USE_DHCP	Use dynamic DHCP settings assigned for device
		DHCP_WITH_SCRIPT	Use dynamic DHCP settings assigned for device and load script file from server and execute it. (Option 66/67)
	OID	1.3.6.1.4.1.3181.10.6.1.22.9.1.2 (v4ConfigDhcpMode)	
static_device_ip	Static device IP address. When DHCP is enabled, DHCP has preference over this setting.		
	Format	IPv4 Address *ddd.ddd.ddd.ddd* (*ddd* = decimal number between 000 to 255)	
	OID	1.3.6.1.4.1.3181.10.6.1.22.9.1.3 (v4ConfigStaticDeviceIp)	
static_subnet_mask	Static subnet mask. When DHCP is enabled, DHCP has preference over this setting.		
	Format	IPv4 Address *ddd.ddd.ddd.ddd* (*ddd* = decimal number between 000 to 255)	
	OID	1.3.6.1.4.1.3181.10.6.1.22.9.1.4 (v4ConfigStaticSubnetMask)	

©2026 MICROSENS GmbH & Co. KG - Hamm/Germany - www.microsens.com

static_gateway	Static default gateway IP address. When DHCP is enabled, DHCP has preference over this setting. **Format** IPv4 Address *ddd.ddd.ddd.ddd* (*ddd* = decimal number between 000 to 255) **OID** 1.3.6.1.4.1.3181.10.6.1.22.9.1.5 (v4ConfigStaticGateway)
static_dns_server	Static domain name server IP address. When DHCP is enabled, DHCP has preference over this setting. **Format** IPv4 Address *ddd.ddd.ddd.ddd* (*ddd* = decimal number between 000 to 255) **OID** 1.3.6.1.4.1.3181.10.6.1.22.9.1.6 (v4ConfigStaticDnsServer)
alternative_dns_server	Alternative static domain name server IP address. When DHCP is enabled, DHCP has preference over this setting. **Format** IPv4 Address *ddd.ddd.ddd.ddd* (*ddd* = decimal number between 000 to 255) **OID** 1.3.6.1.4.1.3181.10.6.1.22.9.1.7 (v4ConfigAlternativeDnsServer)
secondary_device_ip	Alternative IP address for management access. Not required in most installations. **Format** IPv4 Address *ddd.ddd.ddd.ddd* (*ddd* = decimal number between 000 to 255) **OID** 1.3.6.1.4.1.3181.10.6.1.22.9.1.8 (v4ConfigSecondaryDeviceIp)
secondary_subnet_mask	This subnet mask applies to secondary IP address. **Format** IPv4 Address *ddd.ddd.ddd.ddd* (*ddd* = decimal number between 000 to 255) **OID** 1.3.6.1.4.1.3181.10.6.1.22.9.1.9 (v4ConfigSecondarySubnetMask)
default_address_selection	This parameter defines which own IP address is used for outgoing packets generated by the device. This only applies when a secondary_device_ip is configured. **Values** *PRIMARY* Normal setting. Uses the v4_status.current dynamic_device_ip. This is either the static_device_ip or the IP assigned via DHCP. *SECONDARY* Use the secondary_device_ip **OID** 1.3.6.1.4.1.3181.10.6.1.22.9.1.10 (v4ConfigDefaultAddressSelection)

©2026 MICROSENS GmbH & Co. KG - Hamm/Germany - www.microsens.com

Group	**v6_config**
Path	Device.IP.v6_config
Description	This section configures IP version 6 fixed IP settings or enables use of automatic configuration alternatively.

enable_ipv6	General enable of IPv6 management access functionality.	
	Values	enabled, disabled
	OID	1.3.6.1.4.1.3181.10.6.1.22.10.1.2 (v6ConfigEnableIpv6)
enable_icmp_auto_address	Decides if an ICMP assigned IPv6 address is accepted.	
	Values	enabled, disabled
	OID	1.3.6.1.4.1.3181.10.6.1.22.10.1.3 (v6ConfigEnableIcmpAutoAddress)
enable_dhcp_auto_address	Decides if an DHCP assigned IPv6 address is accepted.	
	Values	enabled, disabled
	OID	1.3.6.1.4.1.3181.10.6.1.22.10.1.4 (v6ConfigEnableDhcpAutoAddress)
static_dns_server	Static domain name server reached via IPv6 address.	
	Format	IPv6 Address *hhhh:hhhh:hhhh:hhhh:hhhh:hhhh:hhhh:hhhh* (*hhhh* = hexadecimal number between 0000 to ffff)
	OID	1.3.6.1.4.1.3181.10.6.1.22.10.1.5 (v6ConfigStaticDnsServer)
alternative_dns_server	Alternative static domain name server IPv6 address.	
	Format	IPv6 Address *hhhh:hhhh:hhhh:hhhh:hhhh:hhhh:hhhh:hhhh* (*hhhh* = hexadecimal number between 0000 to ffff)
	OID	1.3.6.1.4.1.3181.10.6.1.22.10.1.6 (v6ConfigAlternativeDnsServer)
static_gateway	Static default gateway IP address.	
	Format	IPv6 Address *hhhh:hhhh:hhhh:hhhh:hhhh:hhhh:hhhh:hhhh* (*hhhh* = hexadecimal number between 0000 to ffff)
	OID	1.3.6.1.4.1.3181.10.6.1.22.10.1.7 (v6ConfigStaticGateway)

©2026 MICROSENS GmbH & Co. KG - Hamm/Germany - www.microsens.com

16.5 IP Status Parameters

Group	**v6_status**, for all IPv6 addresses [0..7]
Path	Device.IP.v6_status[IPv6_addresses]
Description	This section shows a summary of IPv6 settings as they are currently active. These may reflect the statically configured values or may be dynamically assigned using DHCP or ICMP.

ip

IPv6 address.

Format IPv6 Address
hhhh:hhhh:hhhh:hhhh:hhhh:hhhh:hhhh:hhhh
(*hhhh* = hexadecimal number between 0000 to ffff)

OID 1.3.6.1.4.1.3181.10.6.1.22.102.1.2 (v6StatusIp)

scope

Indicates the scope this IP is valid.

Values

LINK	Link_local address, identified by the FE80:: , is used by nodes when communicating with neighboring nodes on the same link. A link local address is automatically configured.
SITE	Scope Site
GLOBAL	Scope Global
OTHER	Other Scope

OID 1.3.6.1.4.1.3181.10.6.1.22.102.1.3 (v6StatusScope)

state

Indicates the state of this IP.

Values

STATELESS	Stateless
STATEFUL	Stateful
BOTH	Stateless and Stateful
OTHER	Other

OID 1.3.6.1.4.1.3181.10.6.1.22.102.1.4 (v6StatusState)

Group	**v4_status**
Path	Device.IP.v4_status
Description	This section shows a summary of IPv4 settings as they are currently active. These may reflect the statically configured values or may be dynamically assigned using DHCP.

©2026 MICROSENS GmbH & Co. KG - Hamm/Germany - www.microsens.com

dynamic_device_ip	Currently used device IP address.	
	Format	IPv4 Address *ddd.ddd.ddd.ddd* (*ddd* = decimal number between 000 to 255)
	OID	1.3.6.1.4.1.3181.10.6.1.22.100.1.2 (v4StatusDynamicDeviceIp)
dynamic_subnet_mask	Currently used subnet mask.	
	Format	IPv4 Address *ddd.ddd.ddd.ddd* (*ddd* = decimal number between 000 to 255)
	OID	1.3.6.1.4.1.3181.10.6.1.22.100.1.3 (v4StatusDynamicSubnetMask)
dynamic_gateway	Currently used gateway IP address.	
	Format	IPv4 Address *ddd.ddd.ddd.ddd* (*ddd* = decimal number between 000 to 255)
	OID	1.3.6.1.4.1.3181.10.6.1.22.100.1.4 (v4StatusDynamicGateway)
dynamic_dns_server_1	Currently used domain name server IP address.	
	Format	IPv4 Address *ddd.ddd.ddd.ddd* (*ddd* = decimal number between 000 to 255)
	OID	1.3.6.1.4.1.3181.10.6.1.22.100.1.5 (v4StatusDynamicDnsServer1)
dynamic_dns_server_2	Alternate currently used domain name server IP address.	
	Format	IPv4 Address *ddd.ddd.ddd.ddd* (*ddd* = decimal number between 000 to 255)
	OID	1.3.6.1.4.1.3181.10.6.1.22.100.1.6 (v4StatusDynamicDnsServer2)
dynamic_dns_server_3	Alternate currently used domain name server IP address.	
	Format	IPv4 Address *ddd.ddd.ddd.ddd* (*ddd* = decimal number between 000 to 255)
	OID	1.3.6.1.4.1.3181.10.6.1.22.100.1.7 (v4StatusDynamicDnsServer3)
dynamic_dns_server_4	Alternate currently used domain name server IP address.	
	Format	IPv4 Address *ddd.ddd.ddd.ddd* (*ddd* = decimal number between 000 to 255)
	OID	1.3.6.1.4.1.3181.10.6.1.22.100.1.8 (v4StatusDynamicDnsServer4)

©2026 MICROSENS GmbH & Co. KG - Hamm/Germany - www.microsens.com

outgoing_device_ip	Reflects the value v4_config.default_address_selection setting. **Format** IPv4 Address *ddd.ddd.ddd.ddd* (*ddd* = decimal number between 000 to 255) **OID** 1.3.6.1.4.1.3181.10.6.1.22.100.1.9 (v4StatusOutgoingDeviceIp)

Group	**v6_base_status**
Path	Device.IP.v6_base_status
Description	This section shows a summary of IPv6 settings as they are currently active. These may reflect the statically configured values or may be dynamically assigned using DHCP or auto_address.

dynamic_gateway	Currently used gateway IP address. **Format** IPv6 Address *hhhh:hhhh:hhhh:hhhh:hhhh:hhhh:hhhh:hhhh* (*hhhh* = hexadecimal number between 0000 to ffff) **OID** 1.3.6.1.4.1.3181.10.6.1.22.101.1.2 (v6BaseStatusDynamicGateway)
dynamic_dns_server_1	Currently used domain name server IP address. **Format** IPv6 Address *hhhh:hhhh:hhhh:hhhh:hhhh:hhhh:hhhh:hhhh* (*hhhh* = hexadecimal number between 0000 to ffff) **OID** 1.3.6.1.4.1.3181.10.6.1.22.101.1.3 (v6BaseStatusDynamicDnsServer1)
dynamic_dns_server_2	Alternate currently used domain name server IP address. **Format** IPv6 Address *hhhh:hhhh:hhhh:hhhh:hhhh:hhhh:hhhh:hhhh* (*hhhh* = hexadecimal number between 0000 to ffff) **OID** 1.3.6.1.4.1.3181.10.6.1.22.101.1.4 (v6BaseStatusDynamicDnsServer2)
dynamic_dns_server_3	Alternate currently used domain name server IP address. **Format** IPv6 Address *hhhh:hhhh:hhhh:hhhh:hhhh:hhhh:hhhh:hhhh* (*hhhh* = hexadecimal number between 0000 to ffff) **OID** 1.3.6.1.4.1.3181.10.6.1.22.101.1.5 (v6BaseStatusDynamicDnsServer3)

©2026 MICROSENS GmbH & Co. KG - Hamm/Germany - www.microsens.com

dynamic_dns_server_4	Alternate currently used domain name server IP address.	
	Format	IPv6 Address *hhhh:hhhh:hhhh:hhhh:hhhh:hhhh:hhhh:hhhh* (*hhhh* = hexadecimal number between 0000 to ffff)
	OID	1.3.6.1.4.1.3181.10.6.1.22.101.1.6 (v6BaseStatusDynamicDnsServer4)

©2026 MICROSENS GmbH & Co. KG - Hamm/Germany - www.microsens.com

17 Port-specific Functions

17.1 Key Features

Administration

Port control. For each port a 64 character long alias name can be assigned .

Use names to match corporate data base naming conventions. Names appear for example in SNMP traps and Syslogs.

Ethernet Twisted-Pair

Auto-Negotiation of speed 10/100/1000, duplex mode, flow-control, Auto MDI/MDI-X

Cable Tester

Integrated cable checker help discover broken cables. Technology is based on time domain reflection measurements of the cable. For each wire pair the termination status is determined. The cable length is calculated and cable shortcuts can be detected.

Supports installation without need for additional tool.

Ethernet Fixed Fiber

100/1000, duplex mode, flow-control. 10G Ethernet ports in selected devices.

Ethernet SFP

Support for pluggable optical port (SFP) permits use with various wave length, fiber types and link distances. Double SFP version MicroSwitch. Up to 8 SFP in Industry Switch.

Link cable may be local or tens of kilometers away. Plug in according to needs.

Dual Media Ports

Some ports can operate with copper or optical cable. Preferences and priorities can be selected.

Additional flexibility

Loop Protection

Local loop protection detects parallel links to the same switch or loops between local ports to avoid endless packet storms.

Safeguards against miscabling. Temporarily shuts down offending port to prevent Ethernet loop condition.

SFP Auto Speed

Automatically reconfigures port data rate to match the highest rate available with the plugged-in SFP. This feature requires original MICROSENS SFPs.

Eases deploymnent in mixed data rate networks by eleminating manual intervention to set port speed. Note that for optical interfaces auto negotition does not apply.

©2026 MICROSENS GmbH & Co. KG - Hamm/Germany - www.microsens.com

17.2 Functional Description

17.2.1 Connection Parameters

Port specific functions vary depending on the port type, mainly determined by the type of media used.

17.2.2 Ethernet Copper Ports

Ethernet copper ports normally support multiple speed, duplex and flow-control options for maximum (backwards) compatibility.

Auto-Negotiation

When two ports are connected by a Twisted-Pair cable, both ports exchange their capabilites and select that common mode of operation that provides highest performance to establish the connection. The port mode is selected according to the following order (descending performance):

1. Gigabit Ethernet: 1000Base-T, full duplex
2. Fast Ethernet: 100Base-TX, full duplex
3. Fast Ethernet: 100Base-TX, half duplex
4. Standard Ethernet: 10Base-T, full duplex
5. Standard Ethernet: 10Base-T, half duplex

The Auto-Negotiation mechanism is the default mode of operation. When both ports do not share a common mode, no link is established. The result of the Auto-Negotiation process is shown in the port status registers.

Manual Settings

When Auto-Negotiation is enabled, the settings for speed, duplex and flow-control determine, if the corresponding ability is advertized via Auto-Negotiation to the link partner.

When Auto-Negotiation is disabled, the connection parameters can be adjusted manually.

1000Base-T always requires Auto-Negotiation enabled.

> ***ATTENTION:* When Auto-Negotiation is disabled, the administrator must take care that both ports connected on the same segment have identical connection parameters. A mismatch e.g. in duplex settings will cause unreliable behaviour of the connection.**

If the remote device does not have Auto-Negotiation capability, the device uses parallel detect function to determine the speed of the remote device for 100Base-TX and 10Base-T mode. If a link is established based on the parallel detect function, then it is required to establish the link at half-duplex mode only.

> ***ATTENTION:* When Auto-Negotiation is disabled on one side of the link only, with the opposite port having Auto-Negotiation enabled, this may result in a mismatch of duplex settings causing unreliable behaviour of the connection.**

©2026 MICROSENS GmbH & Co. KG - Hamm/Germany - www.microsens.com

Auto-MDIX

When connecting two Ethernet ports, depending on the port pinout (MDI or MDI-X) different kind of cables (straight or crossover) would be required. To overcome this restriction, Ethernet copper port implement Auto-MDIX for the automatic detection and adaption of internal wiring depending on the opposite partner.

> ***ATTENTION:* The Auto-MDIX function is only available if Auto-Negotiation is enabled on the port.**

Energy Efficient Ethernet



Ethernet links in 1000Base-T mode require permanently a significant amount of power, even if no data is transmitted. To reduce power consumption, 1000Base-T segments with Energy Efficient Ethernet support (IEEE Std. 802.3az) can enter low power idle mode if no data is transmitted. This mode can reduce power consumpion significantly.

> ***INFO:*** *Energy Efficient Ethernet must be supported by both ports of a segment. If only one port supports EEE, standard power mode is used.*

17.2.3 Ethernet Fiber Ports

Ethernet fiber ports may support multiple speed, duplex and flow-control options, but Auto-Negotiation is only defined for 1000_MBit connections and not supporting speed selection. For 100_MBit links, the speed, duplex and flow-control parameters must alway be configured manually.

> ***ATTENTION:* The administrator must take care that both ports connected on the same segment have identical connection parameters. A mismatch e.g. in duplex settings will cause unreliable behaviour of the connection.**

17.2.4 Dual Media Ports

A dual media port supports both fiber and coppper media. As both physical ports are internally connected to one switch port, only one media can be active at a time.

If both physical ports are connected simultaneously, the active media must be selected. This can be configured by a fixed setting (*force_fiber* or *force_copper*) or by specifying the priority (*fiber_priority* will choose fiber and *copper_priority* will choose copper).

> ***ATTENTION:* A fixed setting for a dual media port will apply even if only one media is connected. If copper is selected as forced mode, then no fiber connection will be established, even if the copper port is not used (and vice versa).**

©2026 MICROSENS GmbH & Co. KG - Hamm/Germany - www.microsens.com

17.3 Port CLI Command Reference

The following table lists all CLI commands applicable for this feature section. For each parameter, the access mode is given:

R = Read Only, R/W = Read/Write, X = Executable Action.

Please note that the effective access rights are dependent on the login level of the user.

Category	Group	Table	Parameter	Options	Access	Description
Device.						
	port.					Basic port specific settings
		config[PORT].				This section defines the basic configuration parameter for each port.
			alias		R/W	Alternative descriptive port name, user definable.
			port_operation		R/W	Enables the port for operation. When disabled, port is shut down.
			role		R/W	Defines is a port is a regular local user port or a link to the network. This setting is references in various sanity checks throughout the system. When in doubt leave at default setting.
			speed		R/W	When Auto-Negotiation is disabled sets the ports data rate to the selected speed. When Auto-Negotiation is enabled it determines the highest data rate advertised on port.
			mtu		R/W	MTU used only to have a place holder for SNMP ifTable
			loop_protection		R/W	Loop protection detects Ethernet loops that can occur when cables are plugged in a way that the data send out of a port come back to the switch on another port. This will result in a data loop of endless packets. Such a loop condition seriously affects network performance and must be avoided.
			auto_negotiation		R/W	Enables Auto-Negotiation mode. When Auto-Negotiation mode is enabled, the parameters speed, full_duplex and flow_control determine the advertised port abilities. When Auto-Negotiation is disabled, the parameters speed, full_duplex and flow_control determine the fixed port configuration. Auto-Negotiation is not available for fiber ports in 100 Mbps mode and must be switched off.

©2026 MICROSENS GmbH & Co. KG - Hamm/Germany - www.microsens.com

	full_duplex	R/W	When Auto-Negotiation is disabled sets port to full duplex operation (when disabled, port is in half duplex mode). When Auto-Negotiation is enabled, it determines the advertisement of full duplex capability.
	flowcontrol	R/W	When Auto-Negotiation is disabled sets port into flow control mode. When Auto-Negotiation is enabled, it determines the advertisement of flow control capability. Flow control is only supported when port is in full duplex mode.
	mdi_mode	R/W	Enables Auto MDI/MDI-X mode to automatically adapt port pinout to cable type used. When set to forced, port pinout is fixed.
	energy_efficiency	R/W	Enable Energy Efficient Ethernet mode is only available for copper ports in 1000Base-T mode.
	dual_media_mode	R/W	Define media selection for dual media ports. This function is only available on ports with dual media Phy.
	allowed_outgoing_ports	R/W	This bitmask may be used to limit the outgoing traffic to certain ports. This feature is also known as port based vlan. Syntax: slot/port, slot/port or use hex value for quick setup = 0x3f (ports 1-6)
monitor.			Port monitoring is a test tool which permits reading data from on port on another port for trouble shooting purposes.
	mode	R/W	Defines in which mode of port monitoring operation is used. Default is DISABLED for normal operation.
	source	R/W	Source port(2) of which the traffic is to be monitored. CLI Syntax: 1/1 for first port. 1/1,1/3 for first and third port
	destination	R/W	Port on which the traffic monitored on the source port shall be copied to. Normally a network sniffer is connected to this port. Please observe that possibly the VLAN setting of the destination port must match the that of the monitored ports. CLI Syntax: 1/1 for first port.

©2026 MICROSENS GmbH & Co. KG - Hamm/Germany - www.microsens.com

	restart_port	X	This function may be used to briefly disabled and enable the port. This may be used to restart port authentication for example. Please supply port number as parameter. The shorthand port format like 1 for 1/1 may be used. Syntax examples: restart_port = 1/2,1/5.
	uplink_ports	R	Indicates which port(s) are connected to the network. The setting is derived from default setting and may be overridden by port.role setting.
	downlink_ports	R	Indicates to which port(s) a downstream switch is connected. The setting is derived from default setting and may be overridden by port.role setting.
status[PORT].			This status table indicates current port status and (negotiated) settings. It also displays if a port is logically blocked due to a certain protocol condition.
	link_up	R	False: Link is down, True: Link is up. For dual media ports this indicates the status of the active media.
	last_link_change	R	Time when the link_up status changed the last time. Value may appear illogical if the system time is not properly set.
	link_state	R	Logical port status.
	rx_activity	R	Indicates true when data activity on the receiver is detected.
	tx_activity	R	Indicates true when data activity on the transmitter is detected.
	media_used	R	indicates which media is used for dual media ports
	speed_used	R	Actual (negotiated) port data rate.
	looped_port	R	Usually empty. When a port loop is detected through loop protection function then the looped port is indicated here.
	full_duplex_used	R	False: Half duplex, True: Full duplex.
	flowcontrol_used	R	False: No flow control, True: Use flow control.
	mdi_used	R	False: MDI pinout, True: MDI-X pinout.
	eee_active	R	When true Energy Efficient Ethernet is supported by both ends of the link and is active.

©2026 MICROSENS GmbH & Co. KG - Hamm/Germany - www.microsens.com

blocking_algorithm	R	Flags indicate blocking request by which algorithm per port.
learning_algorithm	R	Flags indicate learning request by which algorithm per port.
forwarding_algorithm	R	Flags indicate forwarding request by which algorithm per port.
unauthorized_algorithm	R	Flags indicate use of unauthorized vlan request by which algorithm per port.

©2026 MICROSENS GmbH & Co. KG - Hamm/Germany - www.microsens.com

17.4 Port Configuration Parameters

Group	**General Parameters**
Path	Device.Port

restart_port

This function may be used to briefly disabled and enable the port. This may be used to restart port authentication for example. Please supply port number as parameter. The shorthand port format like 1 for 1/1 may be used. Syntax examples: restart_port = 1/2,1/5.

Action Excecute command with parameter string max. 32 characters.

OID 1.3.6.1.4.1.3181.10.6.1.81.3 (portRestartPort)

Group	**config**, for each port[0..24]
Path	Device.Port.config[port]
Description	This section defines the basic configuration parameter for each port.

alias

Alternative descriptive port name, user definable.

Value String, max. 64 characters.

OID 1.3.6.1.4.1.3181.10.6.1.81.1.1.2 (configAlias)
1.0.8802.1.1.2.1.3.7.1.4 (lldpLocPortDesc)
1.3.6.1.2.1.31.1.1.1.18 (ifAlias)

port_operation

Enables the port for operation. When disabled, port is shut down.

Values enabled, disabled

OID 1.3.6.1.4.1.3181.10.6.1.81.1.1.3 (configPortOperation)
1.3.6.1.2.1.2.2.1.7 (ifAdminStatus)

role

Defines is a port is a regular local user port or a link to the network. This setting is references in various sanity checks throughout the system. When in doubt leave at default setting.

Values

DEFAULT	The default port role according to hardware type is used.
LOCAL	This is a regular local port
UPLINK	This port attaches to the network
DOWNLINK	This port is the downstream port to the link of a subsequent switch

OID 1.3.6.1.4.1.3181.10.6.1.81.1.1.4 (configRole)

©2026 MICROSENS GmbH & Co. KG - Hamm/Germany - www.microsens.com

speed	When Auto-Negotiation is disabled sets the ports data rate to the selected speed. When Auto-Negotiation is enabled it determines the highest data rate advertised on port.
Values	*10_MBIT* Port speed 10 Mbps (Standard Ethernet) *100_MBIT* Port Speed 100 Mbps (Fast Ethernet) *1000_MBIT* Port Speed 1000 Mbps (Gigabit Ethernet) *SFP_AUTO* Use only with SFP port. Selects the fastest data rate which the inserted SFP supports *2500_MBIT* Port Speed 2500 Mbps *5_GBIT* Port Speed 5 Gigabit Ethernet *10_GBIT* Port Speed 10 Gigabit
OID	1.3.6.1.4.1.3181.10.6.1.81.1.1.5 (configSpeed)
mtu	MTU used only to have a place holder for SNMP ifTable
Values	*1522_BYTE* Max packet size set to 1522 byte *2048_BYTE* Max packet size set to 2048 byte *10240_BYTE* Max packet size set to 10240 byte (jumbo frames)
OID	1.3.6.1.4.1.3181.10.6.1.81.1.1.6 (configMtu) 1.3.6.1.2.1.2.2.1.4 (ifMtu)
loop_protection	Loop protection detects Ethernet loops that can occur when cables are plugged in a way that the data send out of a port come back to the switch on another port. This will result in a data loop of endless packets. Such a loop condition seriously affects network performance and must be avoided.
Values	enabled, disabled
OID	1.3.6.1.4.1.3181.10.6.1.81.1.1.7 (configLoopProtection)
auto_negotiation	Enables Auto-Negotiation mode. When Auto-Negotiation mode is enabled, the parameters speed, full_duplex and flow_control determine the advertised port abilities. When Auto-Negotiation is disabled, the parameters speed, full_duplex and flow_control determine the fixed port configuration. Auto-Negotiation is not available for fiber ports in 100 Mbps mode and must be switched off.
Values	enabled, disabled
OID	1.3.6.1.4.1.3181.10.6.1.81.1.1.8 (configAutoNegotiation)
full_duplex	When Auto-Negotiation is disabled sets port to full duplex operation (when disabled, port is in half duplex mode). When Auto-Negotiation is enabled, it determines the advertisement of full duplex capability.
Values	enabled, disabled
OID	1.3.6.1.4.1.3181.10.6.1.81.1.1.9 (configFullDuplex)

©2026 MICROSENS GmbH & Co. KG - Hamm/Germany - www.microsens.com

flowcontrol	When Auto-Negotiation is disabled sets port into flow control mode. When Auto-Negotiation is enabled, it determines the advertisement of flow control capability. Flow control is only supported when port is in full duplex mode. **Values** enabled, disabled **OID** 1.3.6.1.4.1.3181.10.6.1.81.1.1.10 (configFlowcontrol)
mdi_mode	Enables Auto MDI/MDI-X mode to automatically adapt port pinout to cable type used. When set to forced, port pinout is fixed. **Values** *AUTO* MDI/MDI-X automatic detection *FORCE_MDI_STD* Port pinout set to normal MDI configuration *FORCE_MDIX* Port pinout set to crossover MDI-X configuration **OID** 1.3.6.1.4.1.3181.10.6.1.81.1.1.11 (configMdiMode)
energy_efficiency	Enable Energy Efficient Ethernet mode is only available for copper ports in 1000Base-T mode. **Values** enabled, disabled **OID** 1.3.6.1.4.1.3181.10.6.1.81.1.1.12 (configEnergyEfficiency)
dual_media_mode	Define media selection for dual media ports. This function is only available on ports with dual media Phy. **Values** *FIBER_PRIORITY* Auto detect media type. Fiber has priority over copper when both media are detected *COPPER_PRIORITY* Auto detect media type. Copper has priority over fiber when both media are detected *FORCE_FIBER* Port set to fiber media *FORCE_COPPER* Port set to copper media **OID** 1.3.6.1.4.1.3181.10.6.1.81.1.1.13 (configDualMediaMode)
allowed_outgoing_ports	This bitmask may be used to limit the outgoing traffic to certain ports. This feature is also known as port based vlan. Syntax: slot/port, slot/port or use hex value for quick setup = 0x3f (ports 1-6) **Value** PORTMASK0-0xFFFFFFFF **OID** 1.3.6.1.4.1.3181.10.6.1.81.1.1.14 (configAllowedOutgoingPorts)

Group	**monitor**
Path	Device.Port.monitor
Description	Port monitoring is a test tool which permits reading data from on port on another port for trouble shooting purposes.

©2026 MICROSENS GmbH & Co. KG - Hamm/Germany - www.microsens.com

mode	Defines in which mode of port monitoring operation is used. Default is DISABLED for normal operation.		
	Values	*DISABLED*	Port monitoring function is disabled. This is normal operation.
		TX_ONLY	Port monitoring function is enabled and all data transmitted at source port are also transmitted out of the destination port.
		RX_ONLY	Port monitoring function is enabled and all data received at source port are also transmitted out of the destination port.
		RX_AND_TX	Port monitoring function is enabled for receive and transmit data of source port. Both types of data will be send out of the destination port.
	OID	1.3.6.1.4.1.3181.10.6.1.81.2.1.2 (monitorMode)	
source	Source port(2) of which the traffic is to be monitored. CLI Syntax: 1/1 for first port. 1/1,1/3 for first and third port		
	Value	PORTMASK0-0xFFFFFFFF	
	OID	1.3.6.1.4.1.3181.10.6.1.81.2.1.3 (monitorSource)	
destination	Port on which the traffic monitored on the source port shall be copied to. Normally a network sniffer is connected to this port. Please observe that possibly the VLAN setting of the destination port must match the that of the monitored ports. CLI Syntax: 1/1 for first port.		
	Value	PORT0-255	
	OID	1.3.6.1.4.1.3181.10.6.1.81.2.1.4 (monitorDestination)	

©2026 MICROSENS GmbH & Co. KG - Hamm/Germany - www.microsens.com

17.5 Port Status Parameters

Group	**General Parameters**
Path	Device.Port
uplink_ports	Indicates which port(s) are connected to the network. The setting is derived from default setting and may be overridden by port.role setting. **Value** PORTMASK0-0xFFFFFFFF **OID** 1.3.6.1.4.1.3181.10.6.1.81.100 (portUplinkPorts)
downlink_ports	Indicates to which port(s) a downstream switch is connected. The setting is derived from default setting and may be overridden by port.role setting. **Value** PORTMASK0-0xFFFFFFFF **OID** 1.3.6.1.4.1.3181.10.6.1.81.101 (portDownlinkPorts)

Group	**status**, for all ports[0..31]
Path	Device.Port.status[port]
Description	This status table indicates current port status and (negotiated) settings. It also displays if a port is logically blocked due to a certain protocol condition.
link_up	False: Link is down, True: Link is up. For dual media ports this indicates the status of the active media. **Values** true, false **OID** 1.3.6.1.4.1.3181.10.6.1.81.102.1.2 (statusLinkUp) 1.3.6.1.2.1.2.2.1.8 (ifOperStatus)
last_link_change	Time when the link_up status changed the last time. Value may appear illogical if the system time is not properly set. **Value** String, max. 32 characters. **OID** 1.3.6.1.4.1.3181.10.6.1.81.102.1.3 (statusLastLinkChange) 1.3.6.1.2.1.2.2.1.9 (ifLastChange)

©2026 MICROSENS GmbH & Co. KG - Hamm/Germany - www.microsens.com

link_state	Logical port status.		
	Values	*LINK_DOWN*	Link is not established. No communication. Ethernet LED is off
		BLOCKING	Port is blocked. No communication. Ethernet LED indicates yellow.
		LEARNING	Port is learning MAC addresses. No communication. Ethernet LED indicates yellow.
		FORWARDING	Port is forwarding data. Ethernet LED indicates green.
		UNAUTH_VLAN	Port is forwarding data on the unauthorized_vlan only. Ethernet LED indicates green.
	OID	1.3.6.1.4.1.3181.10.6.1.81.102.1.4 (statusLinkState) 1.0.8802.1.1.1.1.2.1.1.5 (dot1xAuthAuthControlledPortStatus)	
rx_activity	Indicates true when data activity on the receiver is detected.		
	Values	true, false	
	OID	1.3.6.1.4.1.3181.10.6.1.81.102.1.5 (statusRxActivity)	
tx_activity	Indicates true when data activity on the transmitter is detected.		
	Values	true, false	
	OID	1.3.6.1.4.1.3181.10.6.1.81.102.1.6 (statusTxActivity)	
media_used	indicates which media is used for dual media ports		
	Values	*NONE*	Neither cable nor fiber are active
		COPPER	A copper cable is used
		FIBER	A fiber connection is used
	OID	1.3.6.1.4.1.3181.10.6.1.81.102.1.7 (statusMediaUsed)	
speed_used	Actual (negotiated) port data rate.		
	Values	*DOWN*	Port is down. No communication
		10_MBIT	10Mbit/s is used
		100_MBIT	100Mbit/s is used
		1000_MBIT	1Gbit/s is used
		2500_MBIT	2.5Gbit/s is used
		5_GBIT	5Gbit/s is used
		10_GBIT	10Gbit/s is used
	OID	1.3.6.1.4.1.3181.10.6.1.81.102.1.8 (statusSpeedUsed) 1.3.6.1.2.1.2.2.1.5 (ifSpeed)	
looped_port	Usually empty. When a port loop is detected through loop protection function then the looped port is indicated here.		
	Value	PORTMASK0-0xFFFFFFFF	
	OID	1.3.6.1.4.1.3181.10.6.1.81.102.1.9 (statusLoopedPort)	

©2026 MICROSENS GmbH & Co. KG - Hamm/Germany - www.microsens.com

full_duplex_used	False: Half duplex, True: Full duplex.		
	Values	*NONE*	Port is down
		FULL	Full duplex mode
		HALF	Half duplex mode
	OID	1.3.6.1.4.1.3181.10.6.1.81.102.1.10 (statusFullDuplexUsed) 1.3.6.1.2.1.10.7.2.1.19 (dot3StatsDuplexStatus)	
flowcontrol_used	False: No flow control, True: Use flow control.		
	Values	true, false	
	OID	1.3.6.1.4.1.3181.10.6.1.81.102.1.11 (statusFlowcontrolUsed)	
mdi_used	False: MDI pinout, True: MDI-X pinout.		
	Values	true, false	
	OID	1.3.6.1.4.1.3181.10.6.1.81.102.1.12 (statusMdiUsed)	
eee_active	When true Energy Efficient Ethernet is supported by both ends of the link and is active.		
	Values	true, false	
	OID	1.3.6.1.4.1.3181.10.6.1.81.102.1.13 (statusEeeActive)	
blocking_algorithm	Flags indicate blocking request by which algorithm per port.		
	Values	*PORT_IS_ENABLED*	Port is enabled and can be set to this state
		8021X_APPLIES	Port authentication applies this state
		RSTP_APPLIES	RSTP-algorithm applies this state
		RING_APPLIES	Ring mechanism applies this state
		COUPLING_APPLIES	Ring Coupling mechanism applies this state
		LOOP_PREVENTION_APPLIES	Loop Prevention applies this state
		MAC_AUTH_APPLIES	MAC authentication applies to this state
		BPDU_GUARD_APPLIES	BPDU guard function applies this state
		DHCP_FILTER_APPLIES	DHCP filter function applies this state
	OID	1.3.6.1.4.1.3181.10.6.1.81.102.1.14 (statusBlockingAlgorithm)	

©2026 MICROSENS GmbH & Co. KG - Hamm/Germany - www.microsens.com

learning_algorithm	Flags indicate learning request by which algorithm per port.		
	Values	*PORT_IS_ENABLED*	Port is enabled and can be set to this state
		8021X_APPLIES	Port authentication applies this state
		RSTP_APPLIES	RSTP-algorithm applies this state
		RING_APPLIES	Ring mechanism applies this state
		COUPLING_APPLIES	Ring Coupling mechanism applies this state
		LOOP_PREVENTION_APPLIES	Loop Prevention applies this state
		MAC_AUTH_APPLIES	MAC authentication applies to this state
		BPDU_GUARD_APPLIES	BPDU guard function applies this state
		DHCP_FILTER_APPLIES	DHCP filter function applies this state
	OID	1.3.6.1.4.1.3181.10.6.1.81.102.1.15 (statusLearningAlgorithm)	
forwarding_algorithm	Flags indicate forwarding request by which algorithm per port.		
	Values	*PORT_IS_ENABLED*	Port is enabled and can be set to this state
		8021X_APPLIES	Port authentication applies this state
		RSTP_APPLIES	RSTP-algorithm applies this state
		RING_APPLIES	Ring mechanism applies this state
		COUPLING_APPLIES	Ring Coupling mechanism applies this state
		LOOP_PREVENTION_APPLIES	Loop Prevention applies this state
		MAC_AUTH_APPLIES	MAC authentication applies to this state
		BPDU_GUARD_APPLIES	BPDU guard function applies this state
		DHCP_FILTER_APPLIES	DHCP filter function applies this state
	OID	1.3.6.1.4.1.3181.10.6.1.81.102.1.16 (statusForwardingAlgorithm)	

©2026 MICROSENS GmbH & Co. KG - Hamm/Germany - www.microsens.com

unauthorized_algorithm	Flags indicate use of unauthorized vlan request by which algorithm per port.		
	Values	*PORT_IS_ENABLED*	Port is enabled and can be set to this state
		8021X_APPLIES	Port authentication applies this state
		RSTP_APPLIES	RSTP-algorithm applies this state
		RING_APPLIES	Ring mechanism applies this state
		COUPLING_APPLIES	Ring Coupling mechanism applies this state
		LOOP_PREVENTION_APPLIES	Loop Prevention applies this state
		MAC_AUTH_APPLIES	MAC authentication applies to this state
		BPDU_GUARD_APPLIES	BPDU guard function applies this state
		DHCP_FILTER_APPLIES	DHCP filter function applies this state
	OID	1.3.6.1.4.1.3181.10.6.1.81.102.1.17 (statusUnauthorizedAlgorithm)	

©2026 MICROSENS GmbH & Co. KG - Hamm/Germany - www.microsens.com

18 SFP Transceiver

18.1 Key Features

SFP Management

SFP are automatically detected and their inventory data is displayed. Insertion and removal generates events that may be forwarded as Syslogs or Traps.

Use of SFP permits mix and match with any fiber type and distance requirements.

Power Monitoring

The optical transmit and receive power is permanently monitored and events can be generated when the receive power level varies for more than a customer defined threshold. Automated delta detection eliminates the need to individually measure and configure each port during installation.

Provides detection of optical problems which normal loss of signal monitoring would not catch. Automated setup ensures the feature is actually used.

CSFP Support

Some switch versions supports double port Compact-SFP optical interfaces. These SFP contain two independent single fiber channels and are displayed for two ports with independent optical data.

Highest possible port density. Two optical ports in Installation Switch for redundant network links.

micro OTDR Support

Support for SFP based OTDR (optical time domain reflectometer) measurement to automatically detect changes in the fiber topology. This feature is especially suitable for the NM3 MSP1000 management module.

The OTDR function permit detection of critical changes to a fiber (attack) and help diagnose breaks in the fiber. It detects the distance of the fiber break from the device. This permits purposeful and quicker repair.

18.2 Functional Description

> ***ATTENTION:*** ***This section is only applicable for devices with hardware support for SFP (Small Formfactor Pluggable) optical transceivers.***

18.2.1 Basic Transceiver Information

SFP transceivers are intelligent modules that provide information about their abilities and status. These information include manufacturer, art.-no, serial-no., optical connector type, optical wavelength etc.

The specifications for the SFP tranceivers are defined by the SFF Committee in the document SFF-8074i "*SFP (Small Formfactor Pluggable) Transceiver*". Please see this document for more detailed information.

©2026 MICROSENS GmbH & Co. KG - Hamm/Germany - www.microsens.com

18.2.2 Digital Diagnostics Interface

SFP transceivers implementing the Digital Diagnostics Interface provide additional information about the power levels of the optical ports. This information can be used to monitor the quality of the optical link by checking the received power level for a given fiber segment. If this level changes over time significantly, an alarm event can be triggered.

The specifications for the diagnostic interface are defined by the SFF Committee in the document SFF-8472 "*Diagnostic Monitoring Interface for Optical Xcvrs*". Please see this document for more detailed information.

> ***INFO:*** *This feature is only available when using SFP transceivers implementing the Digital Diagnostics Interface. MICROSENS transceivers indicate this ability by the letter 'D' in the article number.*

©2026 MICROSENS GmbH & Co. KG - Hamm/Germany - www.microsens.com

18.3 sfp CLI Command Reference

The following table lists all CLI commands applicable for this feature section. For each parameter, the access mode is given:

R = Read Only, R/W = Read/Write, X = Executable Action.

Please note that the effective access rights are dependent on the login level of the user.

Category	Group	Table	Parameter	Options	Access	Description
Device.						
	sfp.					SFP pluggable optical or electrical interfaces
		config.				These setting apply to each SFP in the system.
			loss_of_signal_event		R/W	When enabled a loss of optical signal or the return of the signal will create an event.
			optical_delta_detect		R/W	An optical receive power level change of more than delta_threshold between two successive read cycles generates an event.
			delta_threshold		R/W	Defines the dB difference required to trigger an event. Only 1 dB steps are permitted. A value of 0 detects any change. This setting is only for testing. Recommended value: 2.
		information[48].				This table displays data which are read from the inserted SFPs.
			port		R	Indicates the physical port in which this SFP is inserted.
			location		R	Textual description of SFP location.
			status		R	Should indicate OK. LOSS_OF_SIGNAL is shown when the optical receive power level is below the critical lower limit.
			type		R	This parameter shows which type of optics are installed
			connector		R	Shows which connector is used with this SFP.
			wavelength		R	Nominal wavelength if this SFP. May also indicate ITU channel for DWDM optics.
			tx_technology		R	Distinguishes between multimode and single mode SFP. For DWDM SFP more details including grid are shown.
			rx_technology		R	Distinguishes between normal PIN receivers and more sensitive APD receivers.

©2026 MICROSENS GmbH & Co. KG - Hamm/Germany - www.microsens.com

nominal_bitrate	R	Nominal bitrate rounded to nearest 100Mbit. Usually the SFP can be operated at lower speed as well.
manufacturer	R	Shows the manufacturer of this SFP.
part_number	R	Shows the part number of this SFP. This will differ from the MICROSENS order code unless also MICROSENS is indicated as manufacturer.
revision	R	Internal revision code of this SFP.
serial_number	R	Serial number of the SFP.
mfg_date_code	R	Manufacturing date code.
warnings	R	
alarms	R	
tx_power	R	Indicates the optical output in dBm. Some SFP cannot display this value. For electrical SFP N/A (not applicable) is shown.
rx_power	R	Indicates the optical input in dBm. Some SFP cannot display this value. For electrical SFP N/A (not applicable) is shown.
temperature	R	Displays the temperature inside the SFP. This is usually higher than the system temperature.
max_length_9_um	R	Displays nominal maximum reach of this SFP on a standard single mode fiber.
max_length_50_um	R	Displays nominal maximum reach of this SFP on a 50 micro meter multimode fiber.
max_length_62_um	R	Displays nominal maximum reach of this SFP on a 62.5 micro meter multimode fiber.
max_length_copper	R	Displays nominal maximum reach of this SFP on a copper cable. Only applies to electrical SFP.
tuning_range	R	For wavelength tunable optics additional details are shown here.
power_consumption	R	Typical power consumption values are shown if available from the interface.
additional_information	R	Some special SFP can supply additional measurement data. For example OTDR reflection data can be listed here.

©2026 MICROSENS GmbH & Co. KG - Hamm/Germany - www.microsens.com

18.4 sfp Configuration Parameters

Group	**config**
Path	Device.sfp.config
Description	These setting apply to each SFP in the system.

loss_of_signal_event	When enabled a loss of optical signal or the return of the signal will create an event.	
	Values	enabled, disabled
	OID	1.3.6.1.4.1.3181.10.6.1.34.1.1.2 (configLossOfSignalEvent)
optical_delta_detect	An optical receive power level change of more than delta_threshold between two successive read cycles generates an event.	
	Values	enabled, disabled
	OID	1.3.6.1.4.1.3181.10.6.1.34.1.1.3 (configOpticalDeltaDetect)
delta_threshold	Defines the dB difference required to trigger an event. Only 1 dB steps are permitted. A value of 0 detects any change. This setting is only for testing. Recommended value: 2.	
	Value	Number in range 0-6
	OID	1.3.6.1.4.1.3181.10.6.1.34.1.1.4 (configDeltaThreshold)

©2026 MICROSENS GmbH & Co. KG - Hamm/Germany - www.microsens.com

18.5 sfp Status Parameters

Group	**information**, for all SFP ports[0..47]
Path	Device.sfp.information[port]
Description	This table displays data which are read from the inserted SFPs.

port

Indicates the physical port in which this SFP is inserted.

Value PORTMASK0-0xFFFFFFFF

OID 1.3.6.1.4.1.3181.10.6.1.34.100.1.2 (informationPort)

location

Textual description of SFP location.

Value String, max. 16 characters.

OID 1.3.6.1.4.1.3181.10.6.1.34.100.1.3 (informationLocation)

status

Should indicate OK. LOSS_OF_SIGNAL is shown when the optical receive power level is below the critical lower limit.

Values

UNKNOWN	This is show when no data could be retrieved.
OK	Optical operation conditions are OK.
LASER_DISABLED	Laser is disabled. No data can be sent. The port may be disabled.
LOSS_OF_SIGNAL	This flag is set when the optical receive power level is below the critical lower limit.
TX_FAILURE	The laser circuit inside the SFP has detected an error. Try to replug the SFP to unlock this condition.
READ_ERROR	Management read access to the SFP has failed.

OID 1.3.6.1.4.1.3181.10.6.1.34.100.1.4 (informationStatus)

type

This parameter shows which type of optics are installed

Values

EMPTY	No SFP is inserted.
UNKNOWN	An SFP is inserted but its type could not be decoded.
SFP	A normal SFP is inserted.
GBIC	A GBIC is inserted.
SFF	An SFF fixed optical interface is installed.
DWDM_SFP	A DWDM wavelength selected SFP is inserted.
XFP	A XFP is inserted.
CSFP_A	A compact double SFP is inserted. This is port A of the CSFP.
CSFP_B	A compact double SFP is inserted. This is port B of the CSFP.
DWDM_XFP	A DWDM wavelength selected XFP is inserted.
SFP_PLUS	A SFP plus is inserted

OID 1.3.6.1.4.1.3181.10.6.1.34.100.1.5 (informationType)

©2026 MICROSENS GmbH & Co. KG - Hamm/Germany - www.microsens.com

connector	Shows which connector is used with this SFP. **Values** *UNKNOWN* Connector type cannot be decoded. *LC* LC connector is used. *SC* SC connector is used. *MT_RJ* MT_RJ connector is used. *RJ45* Electrical RJ45 connector is used. *MU* MU connector is used. **OID** 1.3.6.1.4.1.3181.10.6.1.34.100.1.6 (informationConnector)
wavelength	Nominal wavelength if this SFP. May also indicate ITU channel for DWDM optics. **Value** String, max. 20 characters. **OID** 1.3.6.1.4.1.3181.10.6.1.34.100.1.7 (informationWavelength)
tx_technology	Distinguishes between multimode and single mode SFP. For DWDM SFP more details including grid are shown. **Value** String, max. 32 characters. **OID** 1.3.6.1.4.1.3181.10.6.1.34.100.1.8 (informationTxTechnology)
rx_technology	Distinguishes between normal PIN receivers and more sensitive APD receivers. **Value** String, max. 16 characters. **OID** 1.3.6.1.4.1.3181.10.6.1.34.100.1.9 (informationRxTechnology)
nominal_bitrate	Nominal bitrate rounded to nearest 100Mbit. Usually the SFP can be operated at lower speed as well. **Value** String, max. 16 characters. **OID** 1.3.6.1.4.1.3181.10.6.1.34.100.1.10 (informationNominalBitrate)
manufacturer	Shows the manufacturer of this SFP. **Value** String, max. 20 characters. **OID** 1.3.6.1.4.1.3181.10.6.1.34.100.1.11 (informationManufacturer)
part_number	Shows the part number of this SFP. This will differ from the MICROSENS order code unless also MICROSENS is indicated as manufacturer. **Value** String, max. 20 characters. **OID** 1.3.6.1.4.1.3181.10.6.1.34.100.1.12 (informationPartNumber)
revision	Internal revision code of this SFP. **Value** String, max. 8 characters. **OID** 1.3.6.1.4.1.3181.10.6.1.34.100.1.13 (informationRevision)
serial_number	Serial number of the SFP. **Value** String, max. 20 characters. **OID** 1.3.6.1.4.1.3181.10.6.1.34.100.1.14 (informationSerialNumber)

©2026 MICROSENS GmbH & Co. KG - Hamm/Germany - www.microsens.com

mfg_date_code	Manufacturing date code.		
	Value	String, max. 16 characters.	
	OID	1.3.6.1.4.1.3181.10.6.1.34.100.1.15 (informationMfgDateCode)	
warnings			
	Values	*NONE*	No warnings are present
		TX_POWER_LOW	Transmit power is near low limit indicating laser aging
		TX_POWER_HIGH	Transmit power is near high limit
		TX_BIAS_LOW	Internal SFP warning
		TX_BIAS_HIGH	Internal SFP warning
		VCC_LOW	Operating voltage near limit
		VCC_HIGH	Operating voltage near limit
		TEMP_LOW	The SFP is cold
		TEMP_HIGH	The SFP is running warm
		RX_POWER_LOW	Marginal optical input signal may introduce bit errors
		RX_POWER_HIGH	High input signal is may cause bit errors
	OID	1.3.6.1.4.1.3181.10.6.1.34.100.1.16 (informationWarnings)	
alarms			
	Values	*NONE*	No alarms are present
		TX_POWER_TOO_LOW	Transmit power is too low due to laser error or transmitter disable
		TX_POWER_TOO_HIGH	Transmit power is too high due to laser error
		TX_BIAS_TOO_LOW	Internal SFP error
		TX_BIAS_TOO_HIGH	Internal SFP error
		VCC_TOO_LOW	Operating voltage error
		VCC_TOO_HIGH	Operating voltage error
		TEMP_TOO_LOW	The SFP is too cold
		TEMP_TOO_HIGH	The SFP is running too hot
		RX_POWER_TOO_LOW	No optical input signal
		RX_POWER_TOO_HIGH	Input signal is too high for error free operation
	OID	1.3.6.1.4.1.3181.10.6.1.34.100.1.17 (informationAlarms)	
tx_power	Indicates the optical output in dBm. Some SFP cannot display this value. For electrical SFP N/A (not applicable) is shown.		
	Value	String, max. 16 characters.	
	OID	1.3.6.1.4.1.3181.10.6.1.34.100.1.18 (informationTxPower)	
rx_power	Indicates the optical input in dBm. Some SFP cannot display this value. For electrical SFP N/A (not applicable) is shown.		
	Value	String, max. 16 characters.	
	OID	1.3.6.1.4.1.3181.10.6.1.34.100.1.19 (informationRxPower)	

©2026 MICROSENS GmbH & Co. KG - Hamm/Germany - www.microsens.com

temperature	Displays the temperature inside the SFP. This is usually higher than the system temperature. **Value** String, max. 16 characters. **OID** 1.3.6.1.4.1.3181.10.6.1.34.100.1.20 (informationTemperature)
max_length_9_um	Displays nominal maximum reach of this SFP on a standard single mode fiber. **Value** String, max. 8 characters. **OID** 1.3.6.1.4.1.3181.10.6.1.34.100.1.21 (informationMaxLength9Um)
max_length_50_um	Displays nominal maximum reach of this SFP on a 50 micro meter multimode fiber. **Value** String, max. 8 characters. **OID** 1.3.6.1.4.1.3181.10.6.1.34.100.1.22 (informationMaxLength50Um)
max_length_62_um	Displays nominal maximum reach of this SFP on a 62.5 micro meter multimode fiber. **Value** String, max. 8 characters. **OID** 1.3.6.1.4.1.3181.10.6.1.34.100.1.23 (informationMaxLength62Um)
max_length_copper	Displays nominal maximum reach of this SFP on a copper cable. Only applies to electrical SFP. **Value** String, max. 8 characters. **OID** 1.3.6.1.4.1.3181.10.6.1.34.100.1.24 (informationMaxLengthCopper)
tuning_range	For wavelength tunable optics additional details are shown here. **Value** String, max. 32 characters. **OID** 1.3.6.1.4.1.3181.10.6.1.34.100.1.25 (informationTuningRange)
power_consumption	Typical power consumption values are shown if available from the interface. **Value** String, max. 20 characters. **OID** 1.3.6.1.4.1.3181.10.6.1.34.100.1.26 (informationPowerConsumption)
additional_information	Some special SFP can supply additional measurement data. For example OTDR reflection data can be listed here. **Value** String, max. 128 characters. **OID** 1.3.6.1.4.1.3181.10.6.1.34.100.1.27 (informationAdditionalInformation)

©2026 MICROSENS GmbH & Co. KG - Hamm/Germany - www.microsens.com

19 Power-over-Ethernet (PoE)

19.1 Key Features

PoE and PoE+ support

Up to 30W can be provided to the attached device. The total amount for power per unit depends on power supply and device type. Some G8 device veriants can deliver 60W or even 90W.

With PoE cabling can be simplified. Typical use is an IP phone. PoE+ can be required by high-end phones with large displays.

PoE Control

PoE / PoE+ voltage is turned on only after powered device (PD) is detected and classified on port. Output voltage and power is monitored. Port power is shut down if limits are exceeded. Events are generated to alert on PoE problems.

Automated operation. Monitoring is provided when needed. SNMP trap will inform about problems.

PoE+ Enable

PoE+ should only be enabled through LLDP-MED protocol. The unit supports this but also permits PoE+ activation via configuration to support devices that do not support LLDP-MED.

Support the Standard but also permit use with older non-standard devices.

Emergency Port

Port can be assigned priority. Should PoE power limitation occur, the priority (emergency) port(s) are not shut down.

Permits for the connection of an emergency phone.

PD Operation

PD enabled switches can be configured to operate on PoE. In this mode no other power supply is required. When one or two regular power supplies can be connected, then the PoE input can act as secondary backup supply.

Simple setup may omit power supply. PoE input may be used as backup source.

PoE Watchdog

PoE powered devices can be monitored by watching their data traffic or by using a PING to the device. If the device fails to respond it is restarted by briefly bringing the PoE power down and up again.

Sometimes certain devices like cameras hang up. These can automatically be recovered with this feature.

19.2 Functional Description

***ATTENTION:* This section is only applicable on devices supporting Power-over-Ethernet according to IEEE Std. 802.3af or 802.3at.**

©2026 MICROSENS GmbH & Co. KG - Hamm/Germany - www.microsens.com

Switches with Power-over-Ethernet (PoE) functionality can power connected end-devices. Devices capable of sourcing electrical power are characterized as 'Power Sourcing Equipment' (PSE). End-devices being powered are characterized as 'Powered Device' (PD).

19.2.1 Power Sourcing Equipment (PSE)

Detection

When sourcing power via a network port, special care must be taken to prevent any damaging of non-PoE capable ports. For this reason, a PoE enabled port will never apply a DC voltage to the pins without carefully detecting and classifying the PoE capabilities of the connected device.

In first step a low test voltage is applied to check if the impedance of the connected device is in the correct range for PoE. This is called 'Detection'.

> ***INFO:*** *Some non-PoE capable devices may present a low impedance path to the PSE. This is detected and shown as "SHORT_CIRCUIT" in the port PoE status. PoE power will not be applied to those devices.*

Classification

If device detection was successful, a second test voltage sequence is applied to retrieve the PoE class of the device. This process is called 'Classification'.

If a valid class is detected and this class is permitted on the port, then finally the PoE voltage is applied and the connected device gets powered up.

The following classes are supported:

Class	Max. PD Power	Description
0	0.44 to 12.94W	Default PoE class
1	0.44 to 3.84W	Optional, very low power
2	3.84 to 6.49W	Optional, low power
3	6.49 to 12.95W	Optional, mid power
4	12.95 to 25.50W	reserved, high power (PoE plus only)

Power Sourcing

If a connected device is powered, the voltage and current values are permanently monitored. If the voltage or current exceeds or falls below the limits permitted for the power class, the PoE power is shut down automatically to prevent any damage to the device.

PoE (IEEE Std. 802.3af)

First PoE standard version defining a maximum power sourcing of 15.4W per port. The typical supply voltage is 48VDC in a range between 44 to 57VDC.

Valid PD classes are in the range of 0 to 3. Class 4 is reserved.

PoE plus (IEEE Std. 802.3at)

Second edition of the PoE standard, often referred as 'PoE plus', defining a maximum power sourcing of 25.5W per port. While the voltage range remains unchanged between 44 and 57VDC, the minimum voltage for the PSE is 50VDC, with a typical value of 54VDC.

To clearly distinguish the extended power mode from standard PoE, the formerly reserved class 4 is used.

©2026 MICROSENS GmbH & Co. KG - Hamm/Germany - www.microsens.com

INFO: *This option is only available to devices supporting Power-over-Ethernet plus according to IEEE Std. 802.3at.*

©2026 MICROSENS GmbH & Co. KG - Hamm/Germany - www.microsens.com

19.3 POE CLI Command Reference

The following table lists all CLI commands applicable for this feature section. For each parameter, the access mode is given:

R = Read Only, R/W = Read/Write, X = Executable Action.

Please note that the effective access rights are dependent on the login level of the user.

Category	Group	Table	Parameter	Options	Access	Description
Device.						
	poe.					Power over Ethernet (POE) settings and statistics.
			poe_max_power_available		R/W	Defines the total power that this units power supply can support. This value is used to balance the PoE output power delivered. Please adjust according to connected power supply rating.
			restart_poe_port		X	This function may be used to briefly drop the power on a PoE port in order to reboot the attached device. Please supply port number as parameter. The shorthand port format like 1 for 1/1 may be used. Syntax examples: poe.restart_poe_port = 1/2,1/5 or poe.restart_poe_port = 1-3 or equivalent poe.restart_poe_port = 1/1-1/3.
			restart_energy_port		X	This function may be used to restart measurement of energy consumption per port. Please supply port number as parameter. The shorthand port format like 1 for 1/1 may be used. Syntax examples: poe.restart_energy_port = 1/2,1/5 or poe.restart_energy_port = 1-3 or equivalent poe.restart_energy_port = 1/1-1/3.
		config[PORT].				Power over Ethernet function permits the powering of connected units which do not use their own local power supply.
			mode		R/W	Used to enable or disable PoE function.
			priority_port		R/W	Ports without priority may be switched off under a power contention situation.
			enable_poe_plus		R/W	Allow between 15-30W/90W power consumption.
		watchdog[PORT].				
			test_method		R/W	Selects the method with which the attached device is probed. Turn unused to ports, which should not affect PoE, to DISABLE.

©2026 MICROSENS GmbH & Co. KG - Hamm/Germany - www.microsens.com

	start_delay	R/W	Defines the time in seconds after PoE enable to the first check. This is useful when the device has a long boot time and a short check period is used. Effectively this delays the first check.
	check_interval	R/W	Defines the time in seconds between successive checks. If set to 0 only manual checks via the test_now command are executed.
	recheck_interval	R/W	Defines the time in seconds between successive checks while an error has occured. This parameter permits a long check interval combined with faster checking while an error is suspected.
	tolerable_failures	R/W	Defines the number of tolerable successive errors before reboot action is taken by toggling PoE.
	minimum_rmon_packets	R/W	Defines the number of packets that must be received within check interval. Applies to RMON test method only.
	checked_address	R/W	Defines the IP v4 or v6 address of the checked device. Also accepts hostname. Applies to PING method only.
	clear_statistics	X	Resets statistics counter for this port to 0.
	total_power_consumed	R	The sum of power currently delivered to all ports. (units: mW)
status[PORT].			This table list the current PoE port conditions.
	condition	R	PoE status and conditions.
	determined_class	R	Determined and negotiated PoE class.
	output_current	R	Current delivered to the attached device. (units: mA)
	output_voltage	R	Voltage delivered to the attached device. (units: mV)
	output_power	R	Calculated power delivered to the attached device. (units: mW)
	power_denied_counter	R	Incremented whenever a PoE request was denied regardless of reason.
	over_current_counter	R	Incremented whenever an over_current condition was detected.
	short_circuit_counter	R	Incremented whenever a short circuit was detected.
	number_of_checks	R	Counts the number of watchdog checks.
	number_of_failures	R	Counts the number of failed wachdog checks.
	poe_restart_counter	R	Counts the number of times PoE was toggled by watchdog to reboot the attached device.

©2026 MICROSENS GmbH & Co. KG - Hamm/Germany - www.microsens.com

energy_supplied[PORT].			This table list the power provided via PoE ports. The values are automatically updated in the given interval.
	time_of_value_restart	R	Time stamp when the statistics counter had been restarted.
	time_since_value_restart	R	How long ago have the statistics counter been restarted.
	last_second	R	Energy supplied in the last second. Value in Joule.
	accumulated	R	Energy supplied since last value reset. Value in Wh. (1Wh = 3600 Joule = 3600Ws).

©2026 MICROSENS GmbH & Co. KG - Hamm/Germany - www.microsens.com

19.4 POE Configuration Parameters

Group	**General Parameters**	
Path	Device.POE	
poe_max_power_available	Defines the total power that this units power supply can support. This value is used to balance the PoE output power delivered. Please adjust according to connected power supply rating.	
	Value	Number in range 0-500
	OID	1.3.6.1.4.1.3181.10.6.1.33.1 (poePoeMaxPowerAvailable) 1.3.6.1.2.1.105.1.3.1.1.2 (pethMainPsePower)
restart_poe_port	This function may be used to briefly drop the power on a PoE port in order to reboot the attached device. Please supply port number as parameter. The shorthand port format like 1 for 1/1 may be used. Syntax examples: poe.restart_poe_port = 1/2,1/5 or poe.restart_poe_port = 1-3 or equivalent poe.restart_poe_port = 1/1-1/3.	
	Action	Excecute command with parameter string max. 32 characters.
	OID	1.3.6.1.4.1.3181.10.6.1.33.2 (poeRestartPoePort)
restart_energy_port	This function may be used to restart measurement of energy consumption per port. Please supply port number as parameter. The shorthand port format like 1 for 1/1 may be used. Syntax examples: poe.restart_energy_port = 1/2,1/5 or poe.restart_energy_port = 1-3 or equivalent poe.restart_energy_port = 1/1-1/3.	
	Action	Excecute command with parameter string max. 32 characters.
	OID	1.3.6.1.4.1.3181.10.6.1.33.3 (poeRestartEnergyPort)

Group	**config**, for each port[0..24]
Path	Device.POE.config[port]
Description	Power over Ethernet function permits the powering of connected units which do not use their own local power supply.

©2026 MICROSENS GmbH & Co. KG - Hamm/Germany - www.microsens.com

mode	Used to enable or disable PoE function.		
	Values	*DISABLED*	PoE function is disabled on this port.
		AUTOMATIC	PoE function is enabled on this port. Attached device is expected to adhere to PoE,PoE+ or POE++ standards.
		CLASS_0	Limits PoE delivery to approximately 13W.
		CLASS_1	Limits PoE delivery to approximately 4W.
		CLASS_2	Limits PoE delivery to approximately 7W.
		CLASS_3	Limits PoE delivery to approximately 13W.
		CLASS_4	Limits PoE delivery to approximately 13W or 26W for when PoE_plus is enabled.
		CLASS_5	Limits PoE delivery to approximately 40W. Uses 4 pairs, PoE++
		CLASS_6	Limits PoE delivery to approximately 51W. Uses 4 pairs, PoE++
		CLASS_7	Limits PoE delivery to approximately 62W. Uses 4 pairs, PoE++
		CLASS_8	Limits PoE delivery to approximately 71W. Uses 4 pairs, PoE++
		FORCED_ON	Forces PoE bypassing the regular negotiation protocol. Use with not compliant legacy PoE devices. WARNING: Do not select when attached device does not support PoE. Hardware damage is possible.
	OID	1.3.6.1.4.1.3181.10.6.1.33.4.1.2 (configMode) 1.3.6.1.2.1.105.1.1.1.3 (pethPsePortAdminEnable)	
priority_port	Ports without priority may be switched off under a power contention situation.		
	Values	enabled, disabled	
	OID	1.3.6.1.4.1.3181.10.6.1.33.4.1.3 (configPriorityPort) 1.3.6.1.2.1.105.1.1.1.7 (pethPsePortPowerPriority)	
enable_poe_plus	Allow between 15-30W/90W power consumption.		
	Values	*DISABLED*	PoE+ function is disabled on this port.
		ENABLED	PoE+ function is enabled on this port.
		LLDP_CONTROLLED	PoE+ function is enabled only when requested via LLDP-MED
	OID	1.3.6.1.4.1.3181.10.6.1.33.4.1.4 (configEnablePoePlus)	

Group	**watchdog**, for each port[0..24]
Path	Device.POE.watchdog[port]
Description	

©2026 MICROSENS GmbH & Co. KG - Hamm/Germany - www.microsens.com

test_method	Selects the method with which the attached device is probed. Turn unused to ports, which should not affect PoE, to DISABLE. **Values** *DISABLED* The watchdog function is not used for this port. *PING* The device is polled via IP V4 address. *RMON* Use RMON ingress packet count for test. If no packet was received in check interval an error is assumed. **OID** 1.3.6.1.4.1.3181.10.6.1.33.5.1.2 (watchdogTestMethod)
start_delay	Defines the time in seconds after PoE enable to the first check. This is useful when the device has a long boot time and a short check period is used. Effectively this delays the first check. **Value** Number in range 0-0xFFFFFFFF **OID** 1.3.6.1.4.1.3181.10.6.1.33.5.1.3 (watchdogStartDelay)
check_interval	Defines the time in seconds between successive checks. If set to 0 only manual checks via the test_now command are executed. **Value** Number in range 0-0xFFFFFFFF **OID** 1.3.6.1.4.1.3181.10.6.1.33.5.1.4 (watchdogCheckInterval)
recheck_interval	Defines the time in seconds between successive checks while an error has occured. This parameter permits a long check interval combined with faster checking while an error is suspected. **Value** Number in range 0-0xFFFFFFFF **OID** 1.3.6.1.4.1.3181.10.6.1.33.5.1.5 (watchdogRecheckInterval)
tolerable_failures	Defines the number of tolerable successive errors before reboot action is taken by toggling PoE. **Value** Number in range 0-100 **OID** 1.3.6.1.4.1.3181.10.6.1.33.5.1.6 (watchdogTolerableFailures)
minimum_rmon_packets	Defines the number of packets that must be received within check interval. Applies to RMON test method only. **Value** Number in range 0-0xFFFFFFFF **OID** 1.3.6.1.4.1.3181.10.6.1.33.5.1.7 (watchdogMinimumRmonPackets)
checked_address	Defines the IP v4 or v6 address of the checked device. Also accepts hostname. Applies to PING method only. **Value** String, max. 32 characters. **OID** 1.3.6.1.4.1.3181.10.6.1.33.5.1.8 (watchdogCheckedAddress)

©2026 MICROSENS GmbH & Co. KG - Hamm/Germany - www.microsens.com

clear_statistics	Resets statistics counter for this port to 0.	
	Action	Excecute command.
	OID	1.3.6.1.4.1.3181.10.6.1.33.5.1.9 (watchdogClearStatistics)

©2026 MICROSENS GmbH & Co. KG - Hamm/Germany - www.microsens.com

19.5 POE Status Parameters

Group	**General Parameters**
Path	Device.POE

total_power_consumed	The sum of power currently delivered to all ports. (units: mW)	
	Value	Number in range 0-0xFFFFFFFF
	OID	1.3.6.1.4.1.3181.10.6.1.33.100 (poeTotalPowerConsumed) 1.3.6.1.2.1.105.1.3.1.1.4 (pethMainPseConsumptionPower)

Group	**status**, for all ports[0..31]
Path	Device.POE.status[port]
Description	This table list the current PoE port conditions.

condition	PoE status and conditions.		
	Values	*DISABLED*	PoE function is disabled
		POWER_OFF	PoE inactive / not required
		DISCOVERING	discovering POE partner
		POWERED	PoE is active and OK
		CLASS_MISMATCH	Requested class was higher than max_class parameter permits
		SHORT_CIRCUIT	The cable to the device has a short circuit. The attached unit may not support PoE. No harm will occur due to short circuit protection.
		REJECTED	POE rejected
		OVER_CURRENT	Overcurrent
		OVER_TEMP	over temperature fault. PoE may be power down.
		VOLTAGE_TOO_LOW	Operating voltage to unit is too low for full PoE operation
	OID	1.3.6.1.4.1.3181.10.6.1.33.101.1.2 (statusCondition) 1.3.6.1.2.1.105.1.1.1.6 (pethPsePortDetectionStatus)	

©2026 MICROSENS GmbH & Co. KG - Hamm/Germany - www.microsens.com

determined_class	Determined and negotiated PoE class. **Values** *IS_CLASS_0* approx. 12.5W *IS_CLASS_1* approx. 4W *IS_CLASS_2* approx. 6.5W *IS_CLASS_3* approx. 12.5W *IS_CLASS_4* approx. 13W or 26W if poe_plus is enabled. *IS_CLASS_5* approx. 40W, requires 4 pair PoE++ *IS_CLASS_6* approx. 51W, requires 4 pair PoE++ *IS_CLASS_7* approx. 62W, requires 4 pair PoE++ *IS_CLASS_8* approx. 71W, requires 4 pair PoE++ *IS_OVERLOAD* too much power for selected class is required. *PROBES_NOT_EQUAL* *IS_UNKNOWN* **OID** 1.3.6.1.4.1.3181.10.6.1.33.101.1.3 (statusDeterminedClass) 1.3.6.1.2.1.105.1.1.1.10 (pethPsePortPowerClassifications)
output_current	Current delivered to the attached device. (units: mA) **Value** Number in range 0-0xFFFFFFFF **OID** 1.3.6.1.4.1.3181.10.6.1.33.101.1.4 (statusOutputCurrent)
output_voltage	Voltage delivered to the attached device. (units: mV) **Value** Number in range 0-0xFFFFFFFF **OID** 1.3.6.1.4.1.3181.10.6.1.33.101.1.5 (statusOutputVoltage)
output_power	Calculated power delivered to the attached device. (units: mW) **Value** Number in range 0-0xFFFFFFFF **OID** 1.3.6.1.4.1.3181.10.6.1.33.101.1.6 (statusOutputPower)
power_denied_counter	Incremented whenever a PoE request was denied regardless of reason. **Value** Number in range 0-0xFFFFFFFF **OID** 1.3.6.1.4.1.3181.10.6.1.33.101.1.7 (statusPowerDeniedCounter) 1.3.6.1.2.1.105.1.1.1.12 (pethPsePortPowerDeniedCounter)
over_current_counter	Incremented whenever an over_current condition was detected. **Value** Number in range 0-0xFFFFFFFF **OID** 1.3.6.1.4.1.3181.10.6.1.33.101.1.8 (statusOverCurrentCounter) 1.3.6.1.2.1.105.1.1.1.13 (pethPsePortOverLoadCounter)
short_circuit_counter	Incremented whenever a short circuit was detected. **Value** Number in range 0-0xFFFFFFFF **OID** 1.3.6.1.4.1.3181.10.6.1.33.101.1.9 (statusShortCircuitCounter) 1.3.6.1.2.1.105.1.1.1.14 (pethPsePortShortCounter)

©2026 MICROSENS GmbH & Co. KG - Hamm/Germany - www.microsens.com

number_of_checks	Counts the number of watchdog checks. **Value** Number in range 0-0xFFFFFFFF **OID** 1.3.6.1.4.1.3181.10.6.1.33.101.1.10 (statusNumberOfChecks)
number_of_failures	Counts the number of failed wachdog checks. **Value** Number in range 0-0xFFFFFFFF **OID** 1.3.6.1.4.1.3181.10.6.1.33.101.1.11 (statusNumberOfFailures)
poe_restart_counter	Counts the number of times PoE was toggled by watchdog to reboot the attached device. **Value** Number in range 0-0xFFFFFFFF **OID** 1.3.6.1.4.1.3181.10.6.1.33.101.1.12 (statusPoeRestartCounter)

Group	**energy_supplied**, for all ports[0..31]
Path	Device.POE.energy_supplied[port]
Description	This table list the power provided via PoE ports. The values are automatically updated in the given interval.

time_of_value_restart	Time stamp when the statistics counter had been restarted. **Value** TIMESTAMP0-0xFFFFFFFF **OID** 1.3.6.1.4.1.3181.10.6.1.33.102.1.2 (energySuppliedTimeOfValueRestart)
time_since_value_restart	How long ago have the statistics counter been restarted. **Value** PERIOD0-0xFFFFFFFF **OID** 1.3.6.1.4.1.3181.10.6.1.33.102.1.3 (energySuppliedTimeSinceValueRestart)
last_second	Energy supplied in the last second. Value in Joule. **Value** Number in range 0-0xFFFFFFFF **OID** 1.3.6.1.4.1.3181.10.6.1.33.102.1.4 (energySuppliedLastSecond)
accumulated	Energy supplied since last value reset. Value in Wh. (1Wh = 3600 Joule = 3600Ws). **Value** Number in range 0-0xFFFFFFFF **OID** 1.3.6.1.4.1.3181.10.6.1.33.102.1.5 (energySuppliedAccumulated)

©2026 MICROSENS GmbH & Co. KG - Hamm/Germany - www.microsens.com

20 MAC Table

20.1 Key Features

MAC Table

The device supports up to 8192 MAC addresses. MAC addresses may be learned or manually configured.

Large number or MACs permits use in large networks.

MAC Filter

Various display filter permit access to table of MAC addresses known to the switch. Predefined plus custom filter to search mac table are provided.

Management access is useful for trouble shooting.

SNMP Access

D-BRIDGE and Q-BRIDGE MIBs are supported.

Permits use with automated security systems such as MACMON or ArpGuard.

MAC Limit

Limit number of allowed MAC addresses per port. Independent of other port access control functions.

MAC Limit per VLAN

Limit number of allowed MAC addresses per port and VLAN. Independent of other port access control functions.

Configurable MAC Aging Time

MAC aging time can be configured between 15s and 1 hour. Defaults to 5 minutes.

20.2 Functional Description

MAC Address Table

The switch provides detailed information about which MAC source address is learned on which port.

©2026 MICROSENS GmbH & Co. KG - Hamm/Germany - www.microsens.com

20.3 MAC CLI Command Reference

The following table lists all CLI commands applicable for this feature section. For each parameter, the access mode is given:

R = Read Only, R/W = Read/Write, X = Executable Action.

Please note that the effective access rights are dependent on the login level of the user.

Category	Group	Table	Parameter	Options	Access	Description
Device.						
	mac.					MAC Address Monitoring
			filter_port		X	Filter MAC table to show only MACs associated with a given port range. The shorthand port format like 1 for 1/1 may be used. Syntax examples: mac.filter_port = 1/2,1/5 or mac.filter_port = 1-3,5.
			filter_user_ports		X	Filter MAC table to show only MACs associated with user ports. This excluded the links. This view eliminates MACs which are not of local interest. No parameter is required.
			filter_vlan		X	Filter MAC table to show only MACs associated with a given VLAN range. Supply VLAN ID as parameter. Syntax example: mac.filter_vlan = 1-4,1000-2000.
			filter_mac		X	Filter MAC table to find a specific MAC address and return the associated port and VLAN. Supply MAC address as parameter. Enter only the first 3 value pairs of the MAC to search for vendor MACs. Syntax example: mac.filter_mac = 01:22:3A.
			filter_custom		X	Filter MAC table according to supplied rules: [-m MAC] [-s SEPARATOR] [-p PORTS] [-v VLANS] or do not enter any parameter and see all MACs.
			filter_multicast_vlan		X	Filter MAC table to show only multicast MACs associated with a given VLAN range. Supply VLAN ID as parameter. Syntax example: mac.filter_multicast_vlan = 1-4,1000-2000.
			filter_multicast_port		X	Filter MAC table to show only multicast MACs associated with a given port range. Supply port as parameter. The shorthand port format like 1 for 1/1 may be used. Syntax examples: mac.filter_multicast_port = 1/2,1/5 or mac.filter_multicast_port = 1-3,5.
			clear_learned_mac_table		X	Wipe out all learned MAC addresses. Static entries are kept intact. No parameter required.
			clear_mac_table_for_vlan		X	Wipe out all MAC addresses for a given VLAN. Please provide the VLAN ID as parameter.

©2026 MICROSENS GmbH & Co. KG - Hamm/Germany - www.microsens.com

	hide_macs_on_link_ports	R/W	When enabled only MACs on local access ports are listed in the MAC table. The MAC entries associated with link ports are excluded. This may significantly reduce the number of shown entries and also speed MAC table reading via SNMP.
	global_aging_time	R/W	The MAC aging timeout can be configured in steps of 15 seconds. The nearest value is taken.
	number_of_entries	R	Total number of MAC address entries in the table.
	number_of_igmp_entries	R	Number of multicast MAC address entries in the table related to IGMP or MLD snooping.
	used_aging_time	R	The actually used aging time which may be modified by RSTP or local setting mac.global_aging_time
	number_of_hidden_entires	R	When the mac.hide_macs_on_link_ports parameter is enabled, this value indicates how many MACs associated with link ports are not shown.
mac_table[8192].			This table lists all MAC addresses maintained by the device. This is an unfiltered list.
	mac	R	MAC address entry
	port	R	Port number for MAC address
	state	R	Entry state indicates further details.
	vlan	R	if non zero this MAC is part of this VLAN.
currently_authorized_macs[256].			This table lists all MAC addresses currently authorized via port access control.
	mac	R	MAC address entry
	port	R	Port number for MAC address
	state	R	Entry state indicates further details.
	vlan	R	if non zero this MAC is part of this VLAN.
	database	R	Internal database index

©2026 MICROSENS GmbH & Co. KG - Hamm/Germany - www.microsens.com

20.4 MAC Configuration Parameters

Group **Path**	**General Parameters** Device.MAC
filter_port	Filter MAC table to show only MACs associated with a given port range. The shorthand port format like 1 for 1/1 may be used. Syntax examples: mac.filter_port = 1/2,1/5 or mac.filter_port = 1-3,5. **Action** Excecute command with parameter string max. 32 characters. **OID** 1.3.6.1.4.1.3181.10.6.1.86.1 (macFilterPort)
filter_user_ports	Filter MAC table to show only MACs associated with user ports. This excluded the links. This view eliminates MACs which are not of local interest. No parameter is required. **Action** Excecute command. **OID** 1.3.6.1.4.1.3181.10.6.1.86.2 (macFilterUserPorts)
filter_vlan	Filter MAC table to show only MACs associated with a given VLAN range. Supply VLAN ID as parameter. Syntax example: mac.filter_vlan = 1-4,1000-2000. **Action** Excecute command with parameter string max. 32 characters. **OID** 1.3.6.1.4.1.3181.10.6.1.86.3 (macFilterVlan)
filter_mac	Filter MAC table to find a specific MAC address and return the associated port and VLAN. Supply MAC address as parameter. Enter only the first 3 value pairs of the MAC to search for vendor MACs. Syntax example: mac.filter_mac = 01:22:3A. **Action** Excecute command with parameter string max. 25 characters. **OID** 1.3.6.1.4.1.3181.10.6.1.86.4 (macFilterMac)
filter_custom	Filter MAC table according to supplied rules: [-m MAC] [-s SEPARATOR] [-p PORTS] [-v VLANS] or do not enter any parameter and see all MACs. **Action** Excecute command with parameter string max. 45 characters. **OID** 1.3.6.1.4.1.3181.10.6.1.86.5 (macFilterCustom)
filter_multicast_vlan	Filter MAC table to show only multicast MACs associated with a given VLAN range. Supply VLAN ID as parameter. Syntax example: mac.filter_multicast_vlan = 1-4,1000-2000. **Action** Excecute command with parameter string max. 32 characters. **OID** 1.3.6.1.4.1.3181.10.6.1.86.6 (macFilterMulticastVlan)

©2026 MICROSENS GmbH & Co. KG - Hamm/Germany - www.microsens.com

filter_multicast_port	Filter MAC table to show only multicast MACs associated with a given port range. Supply port as parameter. The shorthand port format like 1 for 1/1 may be used. Syntax examples: mac.filter_multicast_port = 1/2,1/5 or mac.filter_multicast_port = 1-3,5. **Action** Excecute command with parameter string max. 32 characters. **OID** 1.3.6.1.4.1.3181.10.6.1.86.7 (macFilterMulticastPort)
clear_learned_mac_table	Wipe out all learned MAC addresses. Static entries are kept intact. No parameter required. **Action** Excecute command. **OID** 1.3.6.1.4.1.3181.10.6.1.86.8 (macClearLearnedMacTable)
clear_mac_table_for_vlan	Wipe out all MAC addresses for a given VLAN. Please provide the VLAN ID as parameter. **Action** Excecute command with parameter string max. 5 characters. **OID** 1.3.6.1.4.1.3181.10.6.1.86.9 (macClearMacTableForVlan)
hide_macs_on_link_ports	When enabled only MACs on local access ports are listed in the MAC table. The MAC entries associated with link ports are excluded. This may significantly reduce the number of shown entries and also speed MAC table reading via SNMP. **Values** enabled, disabled **OID** 1.3.6.1.4.1.3181.10.6.1.86.10 (macHideMacsOnLinkPorts)
global_aging_time	The MAC aging timeout can be configured in steps of 15 seconds. The nearest value is taken. **Value** Number in range 15-3825 **OID** 1.3.6.1.4.1.3181.10.6.1.86.11 (macGlobalAgingTime) 1.3.6.1.2.1.17.4.2 (dot1dTpAgingTime)

©2026 MICROSENS GmbH & Co. KG - Hamm/Germany - www.microsens.com

20.5 MAC Status Parameters

Group **Path**	**General Parameters** Device.MAC
number_of_entries	Total number of MAC address entries in the table. **Value** Number in range 0-65535 **OID** 1.3.6.1.4.1.3181.10.6.1.86.100 (macNumberOfEntries)
number_of_igmp_entries	Number of multicast MAC address entries in the table related to IGMP or MLD snooping. **Value** Number in range 0-65535 **OID** 1.3.6.1.4.1.3181.10.6.1.86.101 (macNumberOfIgmpEntries)
used_aging_time	The actually used aging time which may be modified by RSTP or local setting mac.global_aging_time **Value** Number in range 0-65535 **OID** 1.3.6.1.4.1.3181.10.6.1.86.102 (macUsedAgingTime)
number_of_hidden_entires	When the mac.hide_macs_on_link_ports parameter is enabled, this value indicates how many MACs associated with link ports are not shown. **Value** Number in range 0-65535 **OID** 1.3.6.1.4.1.3181.10.6.1.86.103 (macNumberOfHiddenEntires)

©2026 MICROSENS GmbH & Co. KG - Hamm/Germany - www.microsens.com

21 Remote Monitoring (RMON)

21.1 Key Features

RMON counters

35 integrated counters per port for detailed traffic analysis and network trouble shooting.

RMON values may be used with automated test system through the RMON MIB and Etherlike-MIB.

Port Utilization

For each port the utilization in % is shown independantly for each direction. A current utilization is shown as well as averaged values over 30s and 5 minutes.

The values help to judge if a higher port speed should be used. High percent values indicate the port is overutilized.

Port Mirroring

Data of one or more ports can be copied onto anohter port. On the monitoring port the data can be analyzed with an external device.

Eases protocol trouble shooting. Can also be used to monitor user traffic.

21.2 Functional Description

RMON Counters

The switch provides detailed statistic information about traffic type and throughput. These counters can be retrieved per port and direction (ingress or egress)

©2026 MICROSENS GmbH & Co. KG - Hamm/Germany - www.microsens.com

21.3 RMON CLI Command Reference

The following table lists all CLI commands applicable for this feature section. For each parameter, the access mode is given:

R = Read Only, R/W = Read/Write, X = Executable Action.

Please note that the effective access rights are dependent on the login level of the user.

Category	Group	Table	Parameter	Options	Access	Description
Device.						
	rmon.					RMON Remote Monitoring
			clear_all_counter		X	When executed all RMON counters of all ports are reset to 0. This has no service implications.
		ingress[PORT].				Statistics regarding inbound traffic
			entry_status		R	Indicated whether this ports table is updated and valid.
			in_good_octets_lo		R	Number of bytes received without error (low)
			in_good_octets_hi		R	Number of bytes received without error (high)
			in_bad_octets		R	Number of bytes received with error.
			in_total_packets		R	Number of packets on any type received.
			in_unicasts		R	Number of unicast packets received.
			in_non_unicasts		R	Number of packets which are non unicast type.
			in_broadcasts		R	Number of broadcast packets received.
			in_multicasts		R	Number of multicast packets received.
			in_pause		R	Number of pause frames received.
			in_total_receive_errors		R	Number of packets received with any kind of error.
			in_undersize		R	Number of undersized frames received.
			in_oversize		R	Number of oversized frames received.
			in_fragments		R	Number of fragmented frames received.
			in_jabber		R	Number of jabbers received.
			in_fcs_errors		R	Number of checksum errors.
			in_discarded		R	Number of frames discard due to lack of internal buffer space.
		egress[PORT].				Statistics regarding outbound traffic

©2026 MICROSENS GmbH & Co. KG - Hamm/Germany - www.microsens.com

out_good_octets_lo	R	Number of bytes transmitted without error (low)
out_good_octets_hi	R	Number of bytes transmitted without error (high)
out_unicasts	R	Number of unicast packets transmitted
out_non_unicasts	R	Number of packets which are non unicast type
out_broadcasts	R	Number of broadcast packets transmitted
out_multicasts	R	Number of multicast packets transmitted
out_pause	R	Number of pause frames transmitted
out_deferred	R	Number of deferred frames due to a busy condition. This is not an error condition.
out_total_collisions	R	Number of all collisions that have occurred on that port. A collision may occur on a half-duplex interface detecting an incoming packet at the time it was trying to transmit a packet.
out_single_collisions	R	Number of times the port has experienced a single collision when attempting to transmit a packet.
out_multiple_collisions	R	Number of times the port has experienced a multiple collision when attempting to transmit a packet.
out_excessive_collisions	R	Number of times a packet could not be sent due to repeated collisions on the same packet..
out_late_collisions	R	Number of times a late collision has occurred. A late collision occurs when the switch detects an incoming packet after it has already transmitted more than 64 bytes of its current outgoing packet. This indicates a half duplex - full duplex mismatch.
out_fcs_errors	R	Number of checksum errors
out_dropped_packets	R	Number of good outgoing frames that were dropped due to outgoing policies
histogram[PORT].		The histogram indicates the packet size distribution for incoming data per port.
in_64_octets	R	Number of minimum size frames received
in_65_to_127_octets	R	Number of frames with size between 65 and 127 bytes received
in_128_to_255_octets	R	Number of frames with size between 128 and 255 bytes received

©2026 MICROSENS GmbH & Co. KG - Hamm/Germany - www.microsens.com

	in_256_to_511_octets	R	Number of frames with size between 256 and 511 bytes received
	in_512_to_1023_octets	R	Number of frames with size between 512 and 1023 bytes received
	in_1024_to_max_octets	R	Number of frames with size above 1023 bytes received
utilization[PORT].			Calculates averaged data utilization values for each port.
	ingress_now	R	Percentage of received utilization in the last second.
	ingress_30s	R	Percentage of received utilization averaged over last 30s.
	ingress_5min	R	Percentage of received utilization averaged over last 5 minutes.
	egress_now	R	Percentage of outgoing utilization in the last second.
	egress_30s	R	Percentage of outgoing utilization averaged over last 30s.
	egress_5min	R	Percentage of outgoing utilization averaged over last 5 minutes.

©2026 MICROSENS GmbH & Co. KG - Hamm/Germany - www.microsens.com

21.4 RMON Configuration Parameters

Group	**General Parameters**	
Path	Device.RMON	
clear_all_counter	When executed all RMON counters of all ports are reset to 0. This has no service implications.	
	Action	Excecute command.
	OID	1.3.6.1.4.1.3181.10.6.1.85.1 (rmonClearAllCounter)

©2026 MICROSENS GmbH & Co. KG - Hamm/Germany - www.microsens.com

21.5 RMON Status Parameters

Group	**ingress**, for all ports[0..31]
Path	Device.RMON.ingress[port]
Description	Statistics regarding inbound traffic

entry_status	Indicated whether this ports table is updated and valid. **Values** *INVALID* The port is disabled and statistics data are no longer updated *VALID* The port is active and the statistics data are valid **OID** 1.3.6.1.4.1.3181.10.6.1.85.100.1.2 (ingressEntryStatus) 1.3.6.1.2.1.16.1.1.1.21 (etherStatsStatus)
in_good_octets_lo	Number of bytes received without error (low) **Value** Number in range 0-0xFFFFFFFF **OID** 1.3.6.1.4.1.3181.10.6.1.85.100.1.3 (ingressInGoodOctetsLo) 1.3.6.1.2.1.2.2.1.10 (ifInOctets) 1.3.6.1.2.1.16.1.1.1.4 (etherStatsOctets)
in_good_octets_hi	Number of bytes received without error (high) **Value** Number in range 0-0xFFFFFFFF **OID** 1.3.6.1.4.1.3181.10.6.1.85.100.1.4 (ingressInGoodOctetsHi)
in_bad_octets	Number of bytes received with error. **Value** Number in range 0-0xFFFFFFFF **OID** 1.3.6.1.4.1.3181.10.6.1.85.100.1.5 (ingressInBadOctets) 1.3.6.1.2.1.16.1.1.1.8 (etherStatsCRCAlignErrors) 1.3.6.1.2.1.10.7.2.1.2 (dot3StatsAlignmentErrors)
in_total_packets	Number of packets on any type received. **Value** Number in range 0-0xFFFFFFFF **OID** 1.3.6.1.4.1.3181.10.6.1.85.100.1.6 (ingressInTotalPackets) 1.3.6.1.2.1.16.1.1.1.5 (etherStatsPkts)
in_unicasts	Number of unicast packets received. **Value** Number in range 0-0xFFFFFFFF **OID** 1.3.6.1.4.1.3181.10.6.1.85.100.1.7 (ingressInUnicasts) 1.3.6.1.2.1.2.2.1.11 (ifInUcastPkts)
in_non_unicasts	Number of packets which are non unicast type. **Value** Number in range 0-0xFFFFFFFF **OID** 1.3.6.1.4.1.3181.10.6.1.85.100.1.8 (ingressInNonUnicasts) 1.3.6.1.2.1.2.2.1.12 (ifInNUcastPkts)

©2026 MICROSENS GmbH & Co. KG - Hamm/Germany - www.microsens.com

in_broadcasts	Number of broadcast packets received. **Value** Number in range 0-0xFFFFFFFF **OID** 1.3.6.1.4.1.3181.10.6.1.85.100.1.9 (ingressInBroadcasts) 1.3.6.1.2.1.16.1.1.1.6 (etherStatsBroadcastPkts)
in_multicasts	Number of multicast packets received. **Value** Number in range 0-0xFFFFFFFF **OID** 1.3.6.1.4.1.3181.10.6.1.85.100.1.10 (ingressInMulticasts) 1.3.6.1.2.1.16.1.1.1.7 (etherStatsMulticastPkts)
in_pause	Number of pause frames received. **Value** Number in range 0-0xFFFFFFFF **OID** 1.3.6.1.4.1.3181.10.6.1.85.100.1.11 (ingressInPause) 1.3.6.1.2.1.10.7.10.1.3 (dot3InPauseFrames)
in_total_receive_errors	Number of packets received with any kind of error. **Value** Number in range 0-0xFFFFFFFF **OID** 1.3.6.1.4.1.3181.10.6.1.85.100.1.12 (ingressInTotalReceiveErrors)
in_undersize	Number of undersized frames received. **Value** Number in range 0-0xFFFFFFFF **OID** 1.3.6.1.4.1.3181.10.6.1.85.100.1.13 (ingressInUndersize) 1.3.6.1.2.1.16.1.1.1.9 (etherStatsUndersizePkts)
in_oversize	Number of oversized frames received. **Value** Number in range 0-0xFFFFFFFF **OID** 1.3.6.1.4.1.3181.10.6.1.85.100.1.14 (ingressInOversize) 1.3.6.1.2.1.16.1.1.1.10 (etherStatsOversizePkts) 1.3.6.1.2.1.10.7.2.1.13 (dot3StatsFrameTooLongs) 1.3.6.1.2.1.17.1.4.1.5 (dot1dBasePortMtuExceededDiscards)
in_fragments	Number of fragmented frames received. **Value** Number in range 0-0xFFFFFFFF **OID** 1.3.6.1.4.1.3181.10.6.1.85.100.1.15 (ingressInFragments) 1.3.6.1.2.1.16.1.1.1.11 (etherStatsFragments)
in_jabber	Number of jabbers received. **Value** Number in range 0-0xFFFFFFFF **OID** 1.3.6.1.4.1.3181.10.6.1.85.100.1.16 (ingressInJabber) 1.3.6.1.2.1.16.1.1.1.12 (etherStatsJabbers)
in_fcs_errors	Number of checksum errors. **Value** Number in range 0-0xFFFFFFFF **OID** 1.3.6.1.4.1.3181.10.6.1.85.100.1.17 (ingressInFcsErrors) 1.3.6.1.2.1.2.2.1.14 (ifInErrors) 1.3.6.1.2.1.10.7.2.1.3 (dot3StatsFCSErrors)

©2026 MICROSENS GmbH & Co. KG - Hamm/Germany - www.microsens.com

in_discarded	Number of frames discard due to lack of internal buffer space. **Value** Number in range 0-0xFFFFFFFF **OID** 1.3.6.1.4.1.3181.10.6.1.85.100.1.18 (ingressInDiscarded) 1.3.6.1.2.1.2.2.1.13 (ifInDiscards)

Group	**egress**, for all ports[0..31]
Path	Device.RMON.egress[port]
Description	Statistics regarding outbound traffic

out_good_octets_lo	Number of bytes transmitted without error (low) **Value** Number in range 0-0xFFFFFFFF **OID** 1.3.6.1.4.1.3181.10.6.1.85.101.1.2 (egressOutGoodOctetsLo) 1.3.6.1.2.1.2.2.1.16 (ifOutOctets)
out_good_octets_hi	Number of bytes transmitted without error (high) **Value** Number in range 0-0xFFFFFFFF **OID** 1.3.6.1.4.1.3181.10.6.1.85.101.1.3 (egressOutGoodOctetsHi)
out_unicasts	Number of unicast packets transmitted **Value** Number in range 0-0xFFFFFFFF **OID** 1.3.6.1.4.1.3181.10.6.1.85.101.1.4 (egressOutUnicasts) 1.3.6.1.2.1.2.2.1.17 (ifOutUcastPkts)
out_non_unicasts	Number of packets which are non unicast type **Value** Number in range 0-0xFFFFFFFF **OID** 1.3.6.1.4.1.3181.10.6.1.85.101.1.5 (egressOutNonUnicasts) 1.3.6.1.2.1.2.2.1.18 (ifOutNUcastPkts)
out_broadcasts	Number of broadcast packets transmitted **Value** Number in range 0-0xFFFFFFFF **OID** 1.3.6.1.4.1.3181.10.6.1.85.101.1.6 (egressOutBroadcasts)
out_multicasts	Number of multicast packets transmitted **Value** Number in range 0-0xFFFFFFFF **OID** 1.3.6.1.4.1.3181.10.6.1.85.101.1.7 (egressOutMulticasts)

©2026 MICROSENS GmbH & Co. KG - Hamm/Germany - www.microsens.com

out_pause	Number of pause frames transmitted **Value** Number in range 0-0xFFFFFFFF **OID** 1.3.6.1.4.1.3181.10.6.1.85.101.1.8 (egressOutPause) 1.3.6.1.2.1.10.7.10.1.4 (dot3OutPauseFrames)
out_deferred	Number of deferred frames due to a busy condition. This is not an error condition. **Value** Number in range 0-0xFFFFFFFF **OID** 1.3.6.1.4.1.3181.10.6.1.85.101.1.9 (egressOutDeferred) 1.3.6.1.2.1.10.7.2.1.7 (dot3StatsDeferredTransmissions)
out_total_collisions	Number of all collisions that have occurred on that port. A collision may occur on a half-duplex interface detecting an incoming packet at the time it was trying to transmit a packet. **Value** Number in range 0-0xFFFFFFFF **OID** 1.3.6.1.4.1.3181.10.6.1.85.101.1.10 (egressOutTotalCollisions) 1.3.6.1.2.1.16.1.1.1.13 (etherStatsCollisions)
out_single_collisions	Number of times the port has experienced a single collision when attempting to transmit a packet. **Value** Number in range 0-0xFFFFFFFF **OID** 1.3.6.1.4.1.3181.10.6.1.85.101.1.11 (egressOutSingleCollisions) 1.3.6.1.2.1.10.7.2.1.4 (dot3StatsSingleCollisionFrames)
out_multiple_collisions	Number of times the port has experienced a multiple collision when attempting to transmit a packet. **Value** Number in range 0-0xFFFFFFFF **OID** 1.3.6.1.4.1.3181.10.6.1.85.101.1.12 (egressOutMultipleCollisions) 1.3.6.1.2.1.10.7.2.1.13 (dot3StatsMultipleCollisionFrames)
out_excessive_collisions	Number of times a packet could not be sent due to repeated collisions on the same packet.. **Value** Number in range 0-0xFFFFFFFF **OID** 1.3.6.1.4.1.3181.10.6.1.85.101.1.13 (egressOutExcessiveCollisions) 1.3.6.1.2.1.10.7.2.1.9 (dot3StatsExcessiveCollisions)

©2026 MICROSENS GmbH & Co. KG - Hamm/Germany - www.microsens.com

out_late_collisions	Number of times a late collision has occurred. A late collision occurs when the switch detects an incoming packet after it has already transmitted more than 64 bytes of its current outgoing packet. This indicates a half duplex - full duplex mismatch. **Value** Number in range 0-0xFFFFFFFF **OID** 1.3.6.1.4.1.3181.10.6.1.85.101.1.14 (egressOutLateCollisions) 1.3.6.1.2.1.10.7.2.1.8 (dot3StatsLateCollisions)
out_fcs_errors	Number of checksum errors **Value** Number in range 0-0xFFFFFFFF **OID** 1.3.6.1.4.1.3181.10.6.1.85.101.1.15 (egressOutFcsErrors) 1.3.6.1.2.1.2.2.1.20 (ifOutErrors)
out_dropped_packets	Number of good outgoing frames that were dropped due to outgoing policies **Value** Number in range 0-0xFFFFFFFF **OID** 1.3.6.1.4.1.3181.10.6.1.85.101.1.16 (egressOutDroppedPackets) 1.3.6.1.2.1.2.2.1.19 (ifOutDiscards) 1.3.6.1.2.1.16.1.1.1.3 (etherStatsDropEvents) 1.3.6.1.2.1.17.1.4.1.4 (dot1dBasePortDelayExceededDiscards)

Group	**histogram**, for all ports[0..31]
Path	Device.RMON.histogram[port]
Description	The histogram indicates the packet size distribution for incoming data per port.

in_64_octets	Number of minimum size frames received **Value** Number in range 0-0xFFFFFFFF **OID** 1.3.6.1.4.1.3181.10.6.1.85.102.1.2 (histogramIn64Octets) 1.3.6.1.2.1.16.1.1.1.14 (etherStatsPkts64Octets)
in_65_to_127_octets	Number of frames with size between 65 and 127 bytes received **Value** Number in range 0-0xFFFFFFFF **OID** 1.3.6.1.4.1.3181.10.6.1.85.102.1.3 (histogramIn65To127Octets) 1.3.6.1.2.1.16.1.1.1.15 (etherStatsPkts65to127Octets)

©2026 MICROSENS GmbH & Co. KG - Hamm/Germany - www.microsens.com

in_128_to_255_octets	Number of frames with size between 128 and 255 bytes received	
	Value	Number in range 0-0xFFFFFFFF
	OID	1.3.6.1.4.1.3181.10.6.1.85.102.1.4 (histogramIn128To255Octets) 1.3.6.1.2.1.16.1.1.1.16 (etherStatsPkts128to255Octets)
in_256_to_511_octets	Number of frames with size between 256 and 511 bytes received	
	Value	Number in range 0-0xFFFFFFFF
	OID	1.3.6.1.4.1.3181.10.6.1.85.102.1.5 (histogramIn256To511Octets) 1.3.6.1.2.1.16.1.1.1.17 (etherStatsPkts256to511Octets)
in_512_to_1023_octets	Number of frames with size between 512 and 1023 bytes received	
	Value	Number in range 0-0xFFFFFFFF
	OID	1.3.6.1.4.1.3181.10.6.1.85.102.1.6 (histogramIn512To1023Octets) 1.3.6.1.2.1.16.1.1.1.18 (etherStatsPkts512to1023Octets)
in_1024_to_max_octets	Number of frames with size above 1023 bytes received	
	Value	Number in range 0-0xFFFFFFFF
	OID	1.3.6.1.4.1.3181.10.6.1.85.102.1.7 (histogramIn1024ToMaxOctets) 1.3.6.1.2.1.16.1.1.1.19 (etherStatsPkts1024to1518Octets)

Group	**utilization**, for all ports[0..31]
Path	Device.RMON.utilization[port]
Description	Calculates averaged data utilization values for each port.
ingress_now	Percentage of received utilization in the last second.
	Value Number in range 0-255
	OID 1.3.6.1.4.1.3181.10.6.1.85.103.1.2 (utilizationIngressNow)
ingress_30s	Percentage of received utilization averaged over last 30s.
	Value Number in range 0-255
	OID 1.3.6.1.4.1.3181.10.6.1.85.103.1.3 (utilizationIngress30s)
ingress_5min	Percentage of received utilization averaged over last 5 minutes.
	Value Number in range 0-255
	OID 1.3.6.1.4.1.3181.10.6.1.85.103.1.4 (utilizationIngress5min)

©2026 MICROSENS GmbH & Co. KG - Hamm/Germany - www.microsens.com

egress_now	Percentage of outgoing utilization in the last second. **Value** Number in range 0-255 **OID** 1.3.6.1.4.1.3181.10.6.1.85.103.1.5 (utilizationEgressNow)
egress_30s	Percentage of outgoing utilization averaged over last 30s. **Value** Number in range 0-255 **OID** 1.3.6.1.4.1.3181.10.6.1.85.103.1.6 (utilizationEgress30s)
egress_5min	Percentage of outgoing utilization averaged over last 5 minutes. **Value** Number in range 0-255 **OID** 1.3.6.1.4.1.3181.10.6.1.85.103.1.7 (utilizationEgress5min)

©2026 MICROSENS GmbH & Co. KG - Hamm/Germany - www.microsens.com

22 Encryption

22.1 Functional Description

Encrypted Ethernet Links

In today's network landscape, protecting data during transmission is essential. Ethernet networks require robust security measures. Data Encryption, in the form of Media Access Control Security (MACsec), provides a solution by creating an encrypted tunnel at the MAC layer.

MACsec encrypts Ethernet frames between active devices, creating a secure tunnel. This ensures that data is protected from unauthorized access and manipulation.

©2026 MICROSENS GmbH & Co. KG - Hamm/Germany - www.microsens.com

22.2 Encryption CLI Command Reference

The following table lists all CLI commands applicable for this feature section. For each parameter, the access mode is given:

R = Read Only, R/W = Read/Write, X = Executable Action.

Please note that the effective access rights are dependent on the login level of the user.

Category	Group	Table	ParameterOptions	Access	Description
Device.					
	encryption.				Parameter for Encryption Function
			create_keys	X	Run this action to create and output a new random 128 and 256 bit BASE64 encoded keys that can be copy and pasted as encryption keys. Select the key length that matches the selected algorithm.
		config[2].			This section is used to configure the individual data channel.
			name	R/W	The user defined channel name is purely informational.
			algorithm	R/W	Defines the AES encryption strength. When set to PASS_TROUGH the encyption is disabled for this channel.
			port	R/W	Displays which port is associated with this index. Read only and hardware dependent.
			key	R/W	Master AES key in BASE64 notation. The same key must be entered at the far end device.
			header_bypass_mode	R/W	May be used to exclude VLAN tags or E0MPLS tags from encryption to permit routing of the data packets.
			header_offset	R/W	Can be used to exclude the first N bytes behind the Ethernet type field. This may be used if the default settings available with the header_bypass_mode do not fit the application. An even number between 0 and 16 is expected.
			confidentiality_offset	R/W	Can be used to exclude the first N bytes behind the MACSEC tag. This may be used to keep Layer 3 data visible for routing purposes. An even number between 0 and 64 is expected.
			remote_mac	R/W	Enter the MAC of the far end device. Format xx:xx:xx:xx:xx:xx

©2026 MICROSENS GmbH & Co. KG - Hamm/Germany - www.microsens.com

22.3 Encryption Configuration Parameters

Group	**General Parameters**
Path	Device.Encryption

create_keys	Run this action to create and output a new random 128 and 256 bit BASE64 encoded keys that can be copy and pasted as encryption keys. Select the key length that matches the selected algorithm.	
	Action	Excecute command.
	OID	1.3.6.1.4.1.3181.10.6.1.56.1 (encryptionCreateKeys)

©2026 MICROSENS GmbH & Co. KG - Hamm/Germany - www.microsens.com

23 MSP 1000

23.1 Key Features

Forward Migration

The new NM3 management module brings all the benefits of the G6 system the to the MSP1000 Optical WDM System. All features of the previous generation are retained and even legacy TeraMile and LastMile products are supported and can be upgraded.

More than 10 year old installations can be upgraded to the latest management standards and security algorithms.

Inventory

Automatic detection of inserted modules. Detailed inventory information are collected and presented.

Configuration and Status

All MSP 1000 modules as well as legacy TeraMile and LastMile modules can fully be configured and managed. This is possible via all management interfaces such as SNMP, Web, CLI and NMP Manager.

Alarm Correlation

In combination with NMP trap based alarms can be shown in an active list that only shows active alarm conditions. Once rectified they are removed from the alarm list.

This shows a live network alarm summary without the need to look at each trap individually.

Active and Passive mode

In passive mode the NM3 learns the settings of all inserted modules and keeps track of them. In active mode the NM3 forces its locally defined configuration onto the other modules.

Advantage of passive mode is that it works like the previous generation. Advantage of the active mode is that a replaced transponder will automatically be reconfigured to match the requirement of the installation. This simplifies service cases.

23.2 Functional Description

MSP1000

MSP 1000 Optical Transport Platform network management related parameter.

> ***INFO:*** *This feature is only available for NM3/NM3+ Network Management modules for MSP1000.*

©2026 MICROSENS GmbH & Co. KG - Hamm/Germany - www.microsens.com

23.3 MSP1000 CLI Command Reference

The following table lists all CLI commands applicable for this feature section. For each parameter, the access mode is given:

R = Read Only, R/W = Read/Write, X = Executable Action.

Please note that the effective access rights are dependent on the login level of the user.

Category	Group	Table	ParameterOptions	Access	Description
Device.					
	msp1000.				All config and status options related to the optical multi service platform MSP1000.
		system_config.			
			nms_operation_mode	R/W	Read and learn in PASSIVE mode or ACTIVE mode forcing configuration upon the other modules.
			core_mode	R/W	Use V2 unless used with an older system running in V1 mode. Only change when instructed.
			node_id	R/W	Node Id used when NMS is used in combination with SEEmiles V5 management software. When in doubt use default node id 60000.
			disable_legacy_access	R/W	When set network access via SEEmiles is no longer possible.
		slot_config[12].			
			module	R/W	Defines which module is expected to be placed in this slot. This should be identical to the actual hardware. The value may be set prior to actual roll-out to preconfigure the system.
			sparepart_mode	R/W	When enabled the module is operating normally but will not generate any alarms. This is useful for modules that are inserted but only used as spare and are not properly connected at this time. This way unnecessary alarms are avoided.
			port_1_alias	R/W	User defined port name for easier reference.
			port_2_alias	R/W	User defined port name for easier reference.
			port_3_alias	R/W	User defined port name for easier reference.
			port_4_alias	R/W	User defined port name for easier reference.
		x2g_config[12].			This table is used to define any X2G or OFX-3 modules in the system.

©2026 MICROSENS GmbH & Co. KG - Hamm/Germany - www.microsens.com

port_1_datarate	R/W	This parameter defines the data rate used to setup the internal retimer to provide 3R regeneration. Note that internally interconnected ports must be set to the same rate.
port_2_datarate	R/W	This parameter defines the data rate used to setup the internal retimer to provide 3R regeneration. Note that internally interconnected ports must be set to the same rate.
port_3_datarate	R/W	This parameter defines the data rate used to setup the internal retimer to provide 3R regeneration. Note that internally interconnected ports must be set to the same rate.
port_4_datarate	R/W	This parameter defines the data rate used to setup the internal retimer to provide 3R regeneration. Note that internally interconnected ports must be set to the same rate.
cross_connect	R/W	This parameter defines the data path through the module. It is also used to setup a permanent bit error rate test.
deactivate_port_1	R/W	When enabled, the optical interface is disabled and communication is cut.
deactivate_port_2	R/W	When enabled, the optical interface is disabled and communication is cut.
deactivate_port_3	R/W	When enabled, the optical interface is disabled and communication is cut.
deactivate_port_4	R/W	When enabled, the optical interface is disabled and communication is cut.
front_panel_mode	R/W	Determines what is displayed on the front panel, when available. Also controls the modules local buttons.
loss_of_signal_handling	R/W	When set to LOCAL a loss of input signal will not affect another port. When set to PERCOLATE, a loss of signal will turn off the transmitter of the currently associated port.
optimized_for_8b10b	R/W	Enable this feature when Ethernet or FibreChannel is used. Do not set when SDH is used on any port.
bert_pattern	R/W	Defines the bit pattern with which the build-in bit error rate tester (BERT) operates when cross connect is set to BERT.
sfp_delta_interval	R/W	This enables and defines the interval in which the optical receive power level of each SFP is read and compared to previous value.

©2026 MICROSENS GmbH & Co. KG - Hamm/Germany - www.microsens.com

	sfp_delta_threshold	R/W	This defines how much the optical receive power level can differ between successive reads before a warning trap is generated.
	backup_trigger	R/W	Defines under which optical signal condition an automated backup is initiated.
	stay_with_last_link	R/W	When set the backup switch remains in last position even when signal returns. Still the backup warning turns off after the delay set under backup_end parameter expires.
	backup_end	R/W	Defines how long the signal must remain steady before proper operation is assumed and the backup is terminated.
	permit_link_override	R/W	Permits the manual selection of a failed link using the link selection. Defaults to false to safeguard against accidental link selection which would result in loss of connection.
txg_config[12].			This table is used to define any TXG or XCM-2 modules in the system.
	txg_datarate	R/W	This parameter defines the data rate used to setup the internal retimer to provide 3R regeneration. Note that internally interconnected ports must be set to the same rate.
	txg_operation_mode	R/W	This parameter defines the data path through the module when an internal cross connect is available. It is also used to setup a permanent bit error rate test. (most settings apply to X2G, TXG, OFX-3, XCM-2 only)
	port_1_itu_channel	R/W	Tunable laser are supported. Select the wavelength from the supplied 100GHZ ITU-T grid. If the wavelength is not supported by the XFP, a warning event will be received.
	port_2_itu_channel	R/W	Tunable laser are supported. Select the wavelength from the supplied 100GHZ ITU-T grid. If the wavelength is not supported by the XFP, a warning event will be received.
	deactivate_port_1	R/W	When enabled, the optical interface is disabled and communication is cut.
	deactivate_port_2	R/W	When enabled, the optical interface is disabled and communication is cut.
	front_panel_mode	R/W	Determines what is displayed on the front panel, when available. Also controls the modules local buttons.

©2026 MICROSENS GmbH & Co. KG - Hamm/Germany - www.microsens.com

	loss_of_signal_handling	R/W	When set to LOCAL a loss of input signal will not affect another port. When set to PERCOLATE, a loss of signal will turn off the transmitter of the other port.
	bert_pattern	R/W	Defines the bit pattern with which the build-in bit error rate tester (BERT) operates when cross connect is set to BERT.
	sfp_delta_interval	R/W	This enables and defines the interval in which the optical receive power level of each SFP/ XFP is read and compared to previous value.
	sfp_delta_threshold	R/W	This defines how much the optical receive power level can differ between successive reads before a warning trap is generated.
cxg_plus_config[12].			This table is used to define any CXG+ or OFC-10 modules in the system.
	cxg_port_1_2_datarate	R/W	The CXG relies on the features of the XFP to define its data rate. Since various XFP offer different rates with the same settings, only a general setting is provided. Both ports must operate at the same rate.
	cxg_port_3_4_datarate	R/W	The CXG relies on the features of the XFP to define its data rate. Since various XFP offer different rates with the same settings, only a general setting is provided. Both ports must operate at the same rate.
	port_1_itu_channel	R/W	Tunable laser are supported. Select the wavelength from the supplied 100GHZ ITU-T grid. If the wavelength is not supported by the XFP, a warning event will be received.
	port_2_itu_channel	R/W	Tunable laser are supported. Select the wavelength from the supplied 100GHZ ITU-T grid. If the wavelength is not supported by the XFP, a warning event will be received.
	port_3_itu_channel	R/W	Tunable laser are supported. Select the wavelength from the supplied 100GHZ ITU-T grid. If the wavelength is not supported by the XFP, a warning event will be received.
	port_4_itu_channel	R/W	Tunable laser are supported. Select the wavelength from the supplied 100GHZ ITU-T grid. If the wavelength is not supported by the XFP, a warning event will be received.
	deactivate_port_1	R/W	When enabled, the optical interface is disabled and communication is cut.

©2026 MICROSENS GmbH & Co. KG - Hamm/Germany - www.microsens.com

	deactivate_port_2	R/W	When enabled, the optical interface is disabled and communication is cut.
	deactivate_port_3	R/W	When enabled, the optical interface is disabled and communication is cut.
	deactivate_port_4	R/W	When enabled, the optical interface is disabled and communication is cut.
	front_panel_mode	R/W	Determines what is displayed on the front panel, when available. Also controls the modules local buttons.
	loss_of_signal_handling	R/W	When set to LOCAL a loss of input signal will not affect another port. When set to PERCOLATE, a loss of signal will turn off the transmitter of the other port.
	sfp_delta_interval	R/W	This enables and defines the interval in which the optical receive power level of each SFP/ XFP is read and compared to previous value.
	sfp_delta_threshold	R/W	This defines how much the optical receive power level can differ between successive reads before a warning trap is generated.
cxg_config[12].			This table is used to define any CXG or XCM-3 modules in the system.
	cxg_port_1_2_datarate	R/W	The CXG relies on the features of the XFP to define its data rate. Since various XFP offer different rates with the same settings, only a general setting is provided. Both ports must operate at the same rate.
	port_1_itu_channel	R/W	Tunable laser are supported. Select the wavelength from the supplied 100GHZ ITU-T grid. If the wavelength is not supported by the XFP, a warning event will be received.
	port_2_itu_channel	R/W	Tunable laser are supported. Select the wavelength from the supplied 100GHZ ITU-T grid. If the wavelength is not supported by the XFP, a warning event will be received.
	deactivate_port_1	R/W	When enabled, the optical interface is disabled and communication is cut.
	deactivate_port_2	R/W	When enabled, the optical interface is disabled and communication is cut.
	front_panel_mode	R/W	Determines what is displayed on the front panel, when available. Also controls the modules local buttons.

©2026 MICROSENS GmbH & Co. KG - Hamm/Germany - www.microsens.com

	loss_of_signal_handling	R/W	When set to LOCAL a loss of input signal will not affect another port. When set to PERCOLATE, a loss of signal will turn off the transmitter of the other port.
	sfp_delta_interval	R/W	This enables and defines the interval in which the optical receive power level of each SFP/ XFP is read and compared to previous value.
	sfp_delta_threshold	R/W	This defines how much the optical receive power level can differ between successive reads before a warning trap is generated.
t4g_config[12].			This table is used to define any T4G or OFC-4 modules in the system.
	t4g_port_1_2_datarate	R/W	The CXG relies on the features of the XFP to define its data rate. Since various XFP offer different rates with the same settings, only a general setting is provided. Both ports must operate at the same rate.
	t4g_port_3_4_datarate	R/W	Tunable laser are supported. Select the wavelength from the supplied 100GHZ ITU-T grid. If the wavelength is not supported by the XFP, a warning event will be received.
	t4g_operation_mode	R/W	This parameter defines the data path through the module when an internal cross connect is available. It is also used to setup a permanent bit error rate test. (most settings apply to X2G, TXG, OFX-3, XCM-2 only)
	deactivate_port_1	R/W	When enabled, the optical interface is disabled and communication is cut.
	deactivate_port_2	R/W	When enabled, the optical interface is disabled and communication is cut.
	deactivate_port_3	R/W	When enabled, the optical interface is disabled and communication is cut.
	deactivate_port_4	R/W	When enabled, the optical interface is disabled and communication is cut.
	front_panel_mode	R/W	Determines what is displayed on the front panel, when available. Also controls the modules local buttons.
	loss_of_signal_handling	R/W	When set to LOCAL a loss of input signal will not affect another port. When set to PERCOLATE, a loss of signal will turn off the transmitter of the other port.

©2026 MICROSENS GmbH & Co. KG - Hamm/Germany - www.microsens.com

	bert_pattern	R/W	Defines the bit pattern with which the build-in bit error rate tester (BERT) operates when cross connect is set to BERT.
	sfp_delta_interval	R/W	This enables and defines the interval in which the optical receive power level of each SFP/ XFP is read and compared to previous value.
	sfp_delta_threshold	R/W	This defines how much the optical receive power level can differ between successive reads before a warning trap is generated.
m2g_config[12].			This table is used to define any M2G or TDM-2 modules in the system.
	channel_1_datarate	R/W	Devices the data rate of the first TDM channel (port 1)
	channel_2_datarate	R/W	Devices the data rate of the second TDM channel (port 2)
	port_1_copper_sfp	R/W	Set when local copper RJ45 SFP is used and connection cannot be established.
	port_2_copper_sfp	R/W	Set when local copper RJ45 SFP is used and connection cannot be established.
	sfp_delta_interval	R/W	This enables and defines the interval in which the optical receive power level of each SFP/ XFP is read and compared to previous value.
	sfp_delta_threshold	R/W	This defines how much the optical receive power level can differ between successive reads before a warning trap is generated.
	link_backup_trigger	R/W	Defines under which optical signal condition an automated backup is initiated.
	stay_with_last_link	R/W	When set the backup switch remains in last position even when signal returns. Still the backup warning turns off after the delay set under backup_end parameter expires.
	backup_end	R/W	Defines how long the signal must remain steady before proper operation is assumed and the backup is terminated.
	permit_link_override	R/W	Permits the manual selection of a failed link using the link selection. Defaults to false to safeguard against accidental link selection which would result in loss of connection.
om1_config[12].			
	wavelength_port_a	R/W	Defines which wavelength band is measured. Use 1550 setting when a WDM link is measured.

©2026 MICROSENS GmbH & Co. KG - Hamm/Germany - www.microsens.com

	low_threshold_port_a	R/W	Defines the lower optical signal level in dBm. A signal level below this threshold will trigger an event.
	high_threshold_port_a	R/W	Defines the upper optical signal level in dBm. A signal level above this threshold will trigger an event.
	wavelength_port_b	R/W	Defines which wavelength band is measured. Use 1550 setting when a WDM link is measured.
	low_threshold_port_b	R/W	Defines the lower optical signal level in dBm. A signal level below this threshold will trigger an event.
	high_threshold_port_b	R/W	Defines the upper optical signal level in dBm. A signal level above this threshold will trigger an event.
	front_panel_mode	R/W	Determines what is displayed on the front panel, when available. Also controls the modules local buttons.
lp1_config[12].			
	wavelength_port_a	R/W	Defines which wavelength band is measured. Use 1550 setting when a WDM link is measured.
	low_threshold_port_a	R/W	Defines the lower optical signal level in dBm. A signal level below this threshold will trigger an event and a backup when configured.
	high_threshold_port_a	R/W	Defines the upper optical signal level in dBm. A signal level above this threshold will trigger an event and a backup when configured.
	wavelength_port_b	R/W	Defines which wavelength band is measured. Use 1550 setting when a WDM link is measured.
	low_threshold_port_b	R/W	Defines the lower optical signal level in dBm. A signal level below this threshold will trigger an event and a backup when configured.
	high_threshold_port_b	R/W	Defines the upper optical signal level in dBm. A signal level above this threshold will trigger an event and a backup when configured.
	backup_criteria	R/W	Defines under which optical signal condition an automated backup is initiated.
	stay_with_last_link	R/W	When set the backup switch remains in last position even when signal return. Still the backup warning turns off after the delay set under backup_end parameter expires.
	backup_end	R/W	Defines how long the signal must remain steady before proper operation is assumed and the backup is terminated.

©2026 MICROSENS GmbH & Co. KG - Hamm/Germany - www.microsens.com

	front_panel_mode	R/W	Determines what is displayed on the front panel, when available. Also controls the modules local buttons.
em_config[12].			Configuration for EDFA amplifier modules EM2 and EM3.
	edfa_operation_mode	R/W	Defines which wavelength band is measured. Use 1550 setting when a WDM link is measured.
	loss_of_signal_handling	R/W	Defines if loss of input signal turns off the EDFA pump (PERCOLATE) or not (LOCAL)
	signal_gain	R/W	Desired signal gain in dB.
	max_output_power	R/W	Maximum output power permitted to exit the module.
	low_threshold_edfa_in	R/W	This corresponds to the unamplified input signal before entering the EDFA section. Defines the lower optical signal level in dBm. A signal level below this threshold will trigger an event.
	high_threshold_edfa_in	R/W	This corresponds to the unamplified input signal before entering the EDFA section. Defines the upper optical signal level in dBm. A signal level above this threshold will trigger an event.
	low_threshold_port_b	R/W	Port B is the unamplified return path through the module. Defines the lower optical signal level in dBm. A signal level below this threshold will trigger an event.
	high_threshold_port_b	R/W	Port B is the unamplified return path through the module. Defines the upper optical signal level in dBm. A signal level above this threshold will trigger an event.
	front_panel_mode	R/W	Determines what is displayed on the front panel, when available. Also controls the modules local buttons.
module_control[12].			
	enter_password	X	This command will set the module password. Only required when the nms_operation_mode is set to passive mode. Enter the password before configuration or actions can be accepted by the module.
	reboot_module	X	This command will restart the module. All communication will be disrupted! Syntax: reboot_module = CONFIRM.
	warm_start	X	This command will warm start the module. Communication shall not be disrupted. (Firmware dependent) Syntax: warm_start = CONFIRM.

©2026 MICROSENS GmbH & Co. KG - Hamm/Germany - www.microsens.com

clear_counter	X	This command will clear all module and port related statistics counter.
switch_off_backup	X	For a module that supports backup and which currently is in backup condition this command will revert to normal operation. If this would disrupt traffic a warning is returned and nothing is executed. To override this warning and switch back nonetheless type switch_off_backup = CONFIRM
switch_to_backup	X	For a module that supports backup this command will switch to the backup link. If this would disrupt traffic because backup link is not available a warning is returned and nothing is executed. To override this warning and switch over nonetheless type switch_to_backup = CONFIRM
automatic_backup	X	This command returns a manually overridden backup module to normal automatic mode. No parameter are required.
write_display	X	Writes to the front panel display of the module. Only for modules that offer a front panel display.
led_test	X	This will start the modules LED test and will return the LED back up automatic mode after a few seconds. May be also be used to identify a certain module.
loop_off	X	Turns all loops off
loop_port_1	X	Tries to engage a loop at port 1. Note not all modules support loops. View port status to check success.
loop_port_2	X	Tries to engage a loop at port 2. Note not all modules support loops. View port status to check success.
loop_port_3	X	Tries to engage a loop at port 3. Note not all modules support loops. View port status to check success.
loop_port_4	X	Tries to engage a loop at port 4. Note not all modules support loops. View port status to check success.
bert_restart	X	Resynchronizes BERT. Only has an effect if a BERT is available on the module and configured to be active.
bert_insert_error	X	Inserts an error in the data pattern. This can be used to confirm that a BERT is actually operating. Only has an effect if a BERT is available on the module and configured to be active.

©2026 MICROSENS GmbH & Co. KG - Hamm/Germany - www.microsens.com

	bert_clear_counter	X	Clears the BERT counter. Only has an effect if a BERT is available on the module and configured to be active.
system_status.			
	any_error_condition	R	True when any error condition is currently present in any module.
	any_test_mode	R	True when any module is in loopback test or has a backup engaged.
	any_spare_part	R	True when any module is marked as spare part.
	used_node_id	R	Actually used node id as discovered from device
	local_rack	R	Indicates in which rack the management module over which this information is retrieved is inserted.
	local_slot	R	Indicates in which slot the management module over which this information is retrieved is inserted.
module_inventory[12].			
	expected_module	R	Name of module configured for this slot.
	module	R	Name of module actually discovered in this slot. This name should be equal to the above name otherwise configuration may not apply properly.
	type	R	General functional type of module inserted.
	board_code	R	Internal code of actually inserted module.
	additional_info	R	Additional information that may be saved in some modules during production.
	serial_number	R	Serial number as stored within the hardware.
	occupied_slots	R	Number of slots taken by this module. Usually 1.
	project_number	R	Internal hardware project number
	build_version	R	Precise build code for hardware version tracking.
	production_date	R	Production data of the module
	mfg_test_info	R	Internal information for quality management. Manufacturing Site / Test Site / Test Person
	number_of_optical_ports	R	Indicates the number of actively monitored optical ports of this type of module.
	number_of_sfp_ports	R	Indicates the number of optical SFP or SFP+ ports of this type of module.
	number_of_xfp_ports	R	Indicates the number of optical XFP ports of this type of module.

©2026 MICROSENS GmbH & Co. KG - Hamm/Germany - www.microsens.com

	core_firmware_version	R	Core operating system software version.
	core_firmware_date	R	Core operating system software creation date.
	appl_firmware_version	R	Application software version.
	appl_firmware_date	R	Application software creation date.
module_status[12].			This table holds a record for each module in the system. Note that not all modules deliver every kind of status.
	module	R	Name of module actually discovered in this slot.
	system_ok	R	True when the module has booted and appears ok.
	error_condition	R	True when any error condition is currently present.
	test_mode	R	True when module is in loopback test or a backup is engaged.
	spare_part	R	True when module is marked as spare part.
	uptime	R	Uptime since last reboot in seconds.
	time_since_counter_reset	R	How long ago have the statistics counter been restarted.
	temperature	R	Temperature value in centigrade.
	too_hot	R	True when module is running too hot.
	backup_state	R	Indicates if a backup is active and in which state.
	backup_counter	R	Counts the number of times this module has initiated a backup (if backup feature is available for this module type).
	backup_duration	R	How long the backup has been activated in total since last value reset.
port_status[48].			This table holds a record for each optical port of the system. Note that not all modules deliver every kind of statistic.
	module	R	Name of module in which this port is present.
	location	R	Textual description of port location.
	snmp_port	R	Slot and port representation as used in SNMP. Formula is Slot*10000 + Port*10.
	alias	R	Configured alias nickname of this port.
	admin_status	R	Reflects the administrative setting of this port.
	oper_status	R	Indicates the combined operation port status.
	detailed_status	R	Indicates detailed issues related to the port.

©2026 MICROSENS GmbH & Co. KG - Hamm/Germany - www.microsens.com

port_datarate	R	Reflects the data rate setting of this port.
update_time_stamp	R	Indicates the time when this record was last updated.
time_since_value_reset	R	Time since when the following statistics have been accumulated. They restart upon module power up or on forced value reset.
time_since_last_error	R	Time since last input signal loss or input signal too high.
time_signal_too_low	R	Total time the input signal was below threshold.
signal_too_low_counter	R	Number of times a transition to signal too low has occurred.
time_signal_too_high	R	Total time the input signal was above high threshold.
signal_too_high_counter	R	Number of times a transition to signal too high has occurred.
low_threshold	R	Defined signal too low threshold.
current_input_signal	R	Actual current signal level.
high_threshold	R	Defined signal too high threshold.
em_status[12].		Optical amplifier status
system_ok	R	True when no errors are present
errors	R	Indicates various optical error conditions.
hardware_code	R	Details codes about the installed hardware components.
time_since_power_error	R	How long ago since the last time the output power was in error condition.
time_with_power_loss	R	Accumulated time the output power has been down.
input_signal_low_counter	R	Number of times a loss of signal has occurred.
input_power	R	Optical input power of port A.
signal_gain	R	Indicates how strong the input signal is amplified.
optimal_flat_gain	R	Indicates the best gain setting for an even amplification across the wavelength channels
back_reflection	R	The value should be low and indicates cable issues if not.
signal_output_power	R	Indicated the actually achieved optical signal output power.
total_output_power	R	Indicated the actually achieved optical output power leaving the module (including noise).
min_output_power	R	Indicates the minimum optical output level that must be send out
max_output_power	R	Indicates the maximum optical output level that can be send out

©2026 MICROSENS GmbH & Co. KG - Hamm/Germany - www.microsens.com

	cfg_output_power	R	Indicated the desired configured optical output power
bert_status[12].			Displays the results of the bit error rate tester (BERT) if it is present and enabled in a slot
	location	R	Textual description of BERT port location.
	bert_operation	R	Indicates the general bit error rate tester operational status.
	total_errors	R	Number of errored bits. Only valid when BERT is synchronized.
	time_since_last_error	R	Seconds elapsed since the last error was detected.
	total_test_time	R	Accumulated time how long the test was run since last value clear.
	errored_time	R	Accumulated seconds in which at least on errored bit was detected.
	bit_error_rate	R	Averaged bit error rate during test interval.
	ber_since_last_error	R	Bit error rate since last error.
	theoretical_ber	R	Theoretical best possible error rate in the given time frame of the current test interval.
	availability	R	Relation of transmitted vs. Errored bits.

©2026 MICROSENS GmbH & Co. KG - Hamm/Germany - www.microsens.com

23.4 MSP1000 Configuration Parameters

Group	**slot_config**, for all module slots[0..11]
Path	Device.MSP1000.slot_config[slot]
Description	

©2026 MICROSENS GmbH & Co. KG - Hamm/Germany - www.microsens.com

module	Defines which module is expected to be placed in this slot. This should be identical to the actual hardware. The value may be set prior to actual roll-out to preconfigure the system.

©2026 MICROSENS GmbH & Co. KG - Hamm/Germany - www.microsens.com

Values

UNDEFINED	Undefined setting. Please select proper module type
EMPTY	This slot is not used
LEGACY	Module is too old to be supported by this software
PASSIVE	A passive filter module is inserted which is not manageable
X2G	Universal double transponder with cross connect for up 2.7G (legacy name OFX-3)
TXG	Precision 10G XFP transponder with FEC data rates and BERT (legacy name XCM-2)
*CXG_*	8G/10G XFP transponder (legacy name XCM-3)
T4G	SAN optimized double transponder up to 4G (legacy name OFC-4)
EM2	EDFA optical amplifier (legacy name OAM-2)
EM3	EDFA optical amplifier (legacy name OAM-3)
OM1	Precise optical power measurement for 2 channel (legacy name OPM-2)
LP1	Optical line protection switch with power level measurement (legacy name BXM-2)
OS1	Optical switch controlled via management
M2G	Dual Gigabit multiplexer with 2.5G link and optional backup (legacy name TDM-2)
CXGP	8G/10G/16G SFP+ dual transponder (legacy name OFC-10)
NM1	Network Management Module (legacy name NMS-3)
NM2	Network Management Module with 2 SFP ports (legacy name NMS-4)
*NM3_*	Network Management Module with switch and 2 SFP ports (legacy name NMS-6)
NM3P	Network Management Module with switch, 2 SFP ports and IO signals (legacy name NMS-7)
XCM1	10G XFP transponder (legacy name XCM-1)
TDM4	4x100M/ESCON time division multiplexer (legacy name TDM-4)
WCM2	DWDM high performance transponder up to 2.7G (not support by this system)
FC8_FILTER	CWDM passive filter, 8 ports, 1470-1610nm
FC8A_FILTER	CWDM passive filter, 8 ports, 1270-1430nm
FC8X_FILTER	CWDM passive filter, 8 ports, 1470-1610nm, extension port
B4S_FILTER	DWDM passive band filter, lower 4 bands, extension port
B4X_FILTER	DWDM passive band filter, upper 4 bands
B8M_FILTER	DWDM passive band filter, 8 bands, multiplexer
B8D_FILTER	DWDM passive band filter, 8 bands, demultiplexer
FD4_FILTER	DWDM passive filter, 4 ports, 100 GHz grid
DC1_FILTER	Passive dispersion compensation module
SE1	Shelf Expansion module (passive, only in slot 1)

©2026 MICROSENS GmbH & Co. KG - Hamm/Germany - www.microsens.com

	OID	1.3.6.1.4.1.3181.10.6.1.94.2.1.2 (slotConfigModule)
sparepart_mode	When enabled the module is operating normally but will not generate any alarms. This is useful for modules that are inserted but only used as spare and are not properly connected at this time. This way unnecessary alarms are avoided.	
	Values	enabled, disabled
	OID	1.3.6.1.4.1.3181.10.6.1.94.2.1.3 (slotConfigSparepartMode)
port_1_alias	User defined port name for easier reference.	
	Value	String, max. 15 characters.
	OID	1.3.6.1.4.1.3181.10.6.1.94.2.1.4 (slotConfigPort1Alias)
port_2_alias	User defined port name for easier reference.	
	Value	String, max. 15 characters.
	OID	1.3.6.1.4.1.3181.10.6.1.94.2.1.5 (slotConfigPort2Alias)
port_3_alias	User defined port name for easier reference.	
	Value	String, max. 15 characters.
	OID	1.3.6.1.4.1.3181.10.6.1.94.2.1.6 (slotConfigPort3Alias)
port_4_alias	User defined port name for easier reference.	
	Value	String, max. 15 characters.
	OID	1.3.6.1.4.1.3181.10.6.1.94.2.1.7 (slotConfigPort4Alias)

Group	**x2g_config**, for all module slots[0..11]
Path	Device.MSP1000.x2g_config[slot]
Description	This table is used to define any X2G or OFX-3 modules in the system.

©2026 MICROSENS GmbH & Co. KG - Hamm/Germany - www.microsens.com

port_1_datarate

This parameter defines the data rate used to setup the internal retimer to provide 3R regeneration. Note that internally interconnected ports must be set to the same rate.

Values

TRANSPARENT	Transparent. No clock recovery is used
100M_ETH	Port speed 125 Mbps (Fast Ethernet)
1G_ETH	Port speed 1250 Mbps (Gigabit Ethernet)
1X_FC	Port speed 1062 Mbps (1G Fibre Channel)
2X_FC	Port speed 2125 Mbps (2G Fibre Channel)
OC_3	Port speed 155 Mbps (OC-3 / STM-1)
OC_12	Port speed 622 Mbps (OC-12 / STM-4)
OC_48	Port speed 2048 Mbps (OC-48 / STM-16)
OTU1	Port speed 2.67G, FEC RS 255/238, STS48/ STM-16 (X2G, OFX-3 only)
FIX100	Port speed 100M, (special)
ESCON	Port speed 200M, (ESCON)
SDI	Port speed 270M, (SDI)
HDTV	Port speed 1450M, (HDTV)
M2G	Port speed 2550M, to repeat M2G or TDM4

OID 1.3.6.1.4.1.3181.10.6.1.94.3.1.2 (x2gConfigPort1Datarate)

port_2_datarate

This parameter defines the data rate used to setup the internal retimer to provide 3R regeneration. Note that internally interconnected ports must be set to the same rate.

Values

TRANSPARENT	Transparent. No clock recovery is used
100M_ETH	Port speed 125 Mbps (Fast Ethernet)
1G_ETH	Port speed 1250 Mbps (Gigabit Ethernet)
1X_FC	Port speed 1062 Mbps (1G Fibre Channel)
2X_FC	Port speed 2125 Mbps (2G Fibre Channel)
OC_3	Port speed 155 Mbps (OC-3 / STM-1)
OC_12	Port speed 622 Mbps (OC-12 / STM-4)
OC_48	Port speed 2048 Mbps (OC-48 / STM-16)
OTU1	Port speed 2.67G, FEC RS 255/238, STS48/ STM-16 (X2G, OFX-3 only)
FIX100	Port speed 100M, (special)
ESCON	Port speed 200M, (ESCON)
SDI	Port speed 270M, (SDI)
HDTV	Port speed 1450M, (HDTV)
M2G	Port speed 2550M, to repeat M2G or TDM4

OID 1.3.6.1.4.1.3181.10.6.1.94.3.1.3 (x2gConfigPort2Datarate)

©2026 MICROSENS GmbH & Co. KG - Hamm/Germany - www.microsens.com

port_3_datarate

This parameter defines the data rate used to setup the internal retimer to provide 3R regeneration. Note that internally interconnected ports must be set to the same rate.

Values

TRANSPARENT	Transparent. No clock recovery is used
100M_ETH	Port speed 125 Mbps (Fast Ethernet)
1G_ETH	Port speed 1250 Mbps (Gigabit Ethernet)
1X_FC	Port speed 1062 Mbps (1G Fibre Channel)
2X_FC	Port speed 2125 Mbps (2G Fibre Channel)
OC_3	Port speed 155 Mbps (OC-3 / STM-1)
OC_12	Port speed 622 Mbps (OC-12 / STM-4)
OC_48	Port speed 2048 Mbps (OC-48 / STM-16)
OTU1	Port speed 2.67G, FEC RS 255/238, STS48/ STM-16 (X2G, OFX-3 only)
FIX100	Port speed 100M, (special)
ESCON	Port speed 200M, (ESCON)
SDI	Port speed 270M, (SDI)
HDTV	Port speed 1450M, (HDTV)
M2G	Port speed 2550M, to repeat M2G or TDM4

OID 1.3.6.1.4.1.3181.10.6.1.94.3.1.4 (x2gConfigPort3Datarate)

port_4_datarate

This parameter defines the data rate used to setup the internal retimer to provide 3R regeneration. Note that internally interconnected ports must be set to the same rate.

Values

TRANSPARENT	Transparent. No clock recovery is used
100M_ETH	Port speed 125 Mbps (Fast Ethernet)
1G_ETH	Port speed 1250 Mbps (Gigabit Ethernet)
1X_FC	Port speed 1062 Mbps (1G Fibre Channel)
2X_FC	Port speed 2125 Mbps (2G Fibre Channel)
OC_3	Port speed 155 Mbps (OC-3 / STM-1)
OC_12	Port speed 622 Mbps (OC-12 / STM-4)
OC_48	Port speed 2048 Mbps (OC-48 / STM-16)
OTU1	Port speed 2.67G, FEC RS 255/238, STS48/ STM-16 (X2G, OFX-3 only)
FIX100	Port speed 100M, (special)
ESCON	Port speed 200M, (ESCON)
SDI	Port speed 270M, (SDI)
HDTV	Port speed 1450M, (HDTV)
M2G	Port speed 2550M, to repeat M2G or TDM4

OID 1.3.6.1.4.1.3181.10.6.1.94.3.1.5 (x2gConfigPort4Datarate)

©2026 MICROSENS GmbH & Co. KG - Hamm/Germany - www.microsens.com

cross_connect	This parameter defines the data path through the module. It is also used to setup a permanent bit error rate test.		
	Values	*DISCONNECT*	All ports are disconnected
		NORMAL	Default Converter setting. P1-P2 and P3-P4
		ALTERNATE	Converter I P1-P3 and P2-P4
		BACKUP	Point to Point Backup. Normal: P1-P3, Backup: P1-P4
		RING_BACKUP_WEST	Ring Backup West. Normal: P1-P3, Backup: P1-P4 (X2G, OFX-3 only)
		RING_BACKUP_EAST	Ring Backup East. Normal: P1-P4, Backup: P1-P3 (X2G, OFX-3 only)
		MULTICAST	Multicast Rx of P1 is copied to P2, P3, P4 (X2G, OFX-3 only)
		DROP_CONTINUE	P3-P4 plus Rx of P3 is copied to P1, Rx of P4 copy is copied to P2 (X2G, OFX-3 only)
		ADD_DROP_WEST	Add/Drop West. P1-P3 and P3-P4 (X2G, OFX-3 only)
		ADD_DROP_EAST	Add/Drop East. P1-P4 and P2-P3 (X2G, OFX-3 only)
		CROSS_OVER	Cross Over. P1-P4 and P2-P3 (X2G, OFX-3 only)
		SWITCH_P1_P2	Connection P1-P2. Other ports disconnected
		SWITCH_P1_P3	Connection P1-P3. Other ports disconnected
		SWITCH_P1_P4	Connection P1-P4. Other ports disconnected
		BERT_PORT_4	Bit Error Rate Test on P4 (X2G, OFX-3 only)
	OID	1.3.6.1.4.1.3181.10.6.1.94.3.1.6 (x2gConfigCrossConnect)	
deactivate_port_1	When enabled, the optical interface is disabled and communication is cut.		
	Values	enabled, disabled	
	OID	1.3.6.1.4.1.3181.10.6.1.94.3.1.7 (x2gConfigDeactivatePort1)	
deactivate_port_2	When enabled, the optical interface is disabled and communication is cut.		
	Values	enabled, disabled	
	OID	1.3.6.1.4.1.3181.10.6.1.94.3.1.8 (x2gConfigDeactivatePort2)	
deactivate_port_3	When enabled, the optical interface is disabled and communication is cut.		
	Values	enabled, disabled	
	OID	1.3.6.1.4.1.3181.10.6.1.94.3.1.9 (x2gConfigDeactivatePort3)	
deactivate_port_4	When enabled, the optical interface is disabled and communication is cut.		
	Values	enabled, disabled	
	OID	1.3.6.1.4.1.3181.10.6.1.94.3.1.10 (x2gConfigDeactivatePort4)	

©2026 MICROSENS GmbH & Co. KG - Hamm/Germany - www.microsens.com

front_panel_mode	Determines what is displayed on the front panel, when available. Also controls the modules local buttons. **Values** *NORMAL* — Displays module name and error conditions *EXTENDED* — Cyclical shows various system information and error conditions *NORMAL_LOCKED* — Like NORMAL but the module buttons are disabled *EXTENDED_LOCKED* — Like EXTENDED but the module buttons are disabled *REMOTE* — Display is not updated and can be controlled from remote management system **OID** 1.3.6.1.4.1.3181.10.6.1.94.3.1.11 (x2gConfigFrontPanelMode)
loss_of_signal_handling	When set to LOCAL a loss of input signal will not affect another port. When set to PERCOLATE, a loss of signal will turn off the transmitter of the currently associated port. **Values** *LOCAL* — Laser is always turned on when port is enabled *PERCOLATE* — Laser is turned off when receiver of associated port is down **OID** 1.3.6.1.4.1.3181.10.6.1.94.3.1.12 (x2gConfigLossOfSignalHandling)
optimized_for_8b10b	Enable this feature when Ethernet or FibreChannel is used. Do not set when SDH is used on any port. **Values** enabled, disabled **OID** 1.3.6.1.4.1.3181.10.6.1.94.3.1.13 (x2gConfigOptimizedFor8b10b)
bert_pattern	Defines the bit pattern with which the build-in bit error rate tester (BERT) operates when cross connect is set to BERT. **Values** *2_7* — BERT pattern which repeats every 2^7 bits is used *2_23* — BERT pattern which repeats every 2^23 bits is used *2_31* — BERT pattern which repeats every 2^31 bits is used *CJ_PAT* — BERT pattern for 8B10 code testing (X2G, OFX-3 only) *CR_PAT* — BERT pattern for 8B10 code testing (X2G, OFX-3 only) *8B_10B_CNT* — BERT pattern for 8B10 code testing (X2G, OFX-3 only) **OID** 1.3.6.1.4.1.3181.10.6.1.94.3.1.14 (x2gConfigBertPattern)

©2026 MICROSENS GmbH & Co. KG - Hamm/Germany - www.microsens.com

sfp_delta_interval

This enables and defines the interval in which the optical receive power level of each SFP is read and compared to previous value.

Values

DISABLED	Optical receiver power delta detection is disabled
1_SEC	Optical receive power is compared every second
5_SEC	Optical receive power is compared every 5 seconds
10_SEC	Optical receive power is compared every 10 seconds
30_SEC	Optical receive power is compared every 30 seconds
60_SEC	Optical receive power is compared every minute
240_SEC	Optical receive power is compared every 4 minutes

OID 1.3.6.1.4.1.3181.10.6.1.94.3.1.15 (x2gConfigSfpDeltaInterval)

sfp_delta_threshold

This defines how much the optical receive power level can differ between successive reads before a warning trap is generated.

Values

0_5_DB	An event is generated if power level varies more then half a dB
1_DB	An event is generated if power level varies more then 1 dB
1_5_DB	An event is generated if power level varies more then 1.5 dB
2_DB	An event is generated if power level varies more then 2 dB
3_DB	An event is generated if power level varies more then 3 dB
5_DB	An event is generated if power level varies more then 5 dB

OID 1.3.6.1.4.1.3181.10.6.1.94.3.1.16 (x2gConfigSfpDeltaThreshold)

backup_trigger

Defines under which optical signal condition an automated backup is initiated.

Values

DISABLED	Automatic backup function is disabled. Manual switching is possible
SIGNAL_LOSS	Backup is controlled by loss of optical signal as indicated by SFP
CLOCK_LOSS	Backup is controlled by loss of clock synchronization of retimer

OID 1.3.6.1.4.1.3181.10.6.1.94.3.1.17 (x2gConfigBackupTrigger)

stay_with_last_link

When set the backup switch remains in last position even when signal returns. Still the backup warning turns off after the delay set under backup_end parameter expires.

Values enabled, disabled

OID 1.3.6.1.4.1.3181.10.6.1.94.3.1.18 (x2gConfigStayWithLastLink)

©2026 MICROSENS GmbH & Co. KG - Hamm/Germany - www.microsens.com

backup_end	Defines how long the signal must remain steady before proper operation is assumed and the backup is terminated. **Values** *NO_DELAY* Immediately switch off backup when missing signal returns *15_SECONDS* When missing signal returns wait for 15 seconds during which no further signal loss must occur. Only then switch off the backup path *15_MINUTES* When missing signal returns wait for 15 minutes during which no further signal loss must occur. Only then switch off the backup path *MANUALLY* Do not switchback automatically. Use action command to switch off backup **OID** 1.3.6.1.4.1.3181.10.6.1.94.3.1.19 (x2gConfigBackupEnd)
permit_link_override	Permits the manual selection of a failed link using the link selection. Defaults to false to safeguard against accidental link selection which would result in loss of connection. **Values** enabled, disabled **OID** 1.3.6.1.4.1.3181.10.6.1.94.3.1.20 (x2gConfigPermitLinkOverride)

Group	**txg_config**, for all module slots[0..11]
Path	Device.MSP1000.txg_config[slot]
Description	This table is used to define any TXG or XCM-2 modules in the system.

txg_datarate	This parameter defines the data rate used to setup the internal retimer to provide 3R regeneration. Note that internally interconnected ports must be set to the same rate. **Values** *OC_192* Port speed 9953 Mbps (OC-192 / STM-64) *OC_192_FEC* Port speed 10660 Mbps (OC192 plus FEC) *10G_ETH* Port speed 10300 Mbps (10G Ethernet) *10X_FC* Port speed 10530 Mbps (10G Fibre Channel) *OTU2* Port speed 10709 MB, FEC RS 255/237, STS-192/STM-64 *OTU_1F* Port speed 11270 MB, FEC RS 255/238, 10G FC over OTN *OTU_2E* Port speed 11096 MB, FEC RS 255/237, 10G Eth over OTN *OTU_2F* Port speed 11318 MB, FEC RS 255/237, 10G FC over OTN **OID** 1.3.6.1.4.1.3181.10.6.1.94.4.1.2 (txgConfigTxgDatarate)

©2026 MICROSENS GmbH & Co. KG - Hamm/Germany - www.microsens.com

txg_operation_mode	This parameter defines the data path through the module when an internal cross connect is available. It is also used to setup a permanent bit error rate test. (most settings apply to X2G, TXG, OFX-3, XCM-2 only)		
	Values	*DISABLED*	Both XFP ports are disabled
		TRANSPONDER	Received clock is recovered and then used for transmitter
		REPEATER	Received clock is recovered and specially cleaned and then used for transmitter
		BERT_PORT_1	BERT is operational port 1. Port 2 is unused
		BERT_PORT_2	BERT is operational port 2. Port 1 is unused
	OID	1.3.6.1.4.1.3181.10.6.1.94.4.1.3 (txgConfigTxgOperationMode)	

©2026 MICROSENS GmbH & Co. KG - Hamm/Germany - www.microsens.com

port_1_itu_channel	Tunable laser are supported. Select the wavelength from the supplied 100GHZ ITU-T grid. If the wavelength is not supported by the XFP, a warning event will be received.

©2026 MICROSENS GmbH & Co. KG - Hamm/Germany - www.microsens.com

Values

FIXED	Fixed wavelength defined by installed optic
CH11	ITU channel 11
CH12	ITU channel 12
CH13	ITU channel 13
CH14	ITU channel 14
CH15	ITU channel 15
CH16	ITU channel 16
CH17	ITU channel 17
CH18	ITU channel 18
CH19	ITU channel 19
CH20	ITU channel 20
CH21	ITU channel 21
CH22	ITU channel 22
CH23	ITU channel 23
CH24	ITU channel 24
CH25	ITU channel 25
CH26	ITU channel 26
CH27	ITU channel 27
CH28	ITU channel 28
CH29	ITU channel 29
CH30	ITU channel 30
CH31	ITU channel 31
CH32	ITU channel 32
CH33	ITU channel 33
CH34	ITU channel 34
CH35	ITU channel 35
CH36	ITU channel 36
CH37	ITU channel 37
CH38	ITU channel 38
CH39	ITU channel 39
CH40	ITU channel 40
CH41	ITU channel 41
CH42	ITU channel 42
CH43	ITU channel 43
CH44	ITU channel 44
CH45	ITU channel 45
CH46	ITU channel 46
CH47	ITU channel 47
CH48	ITU channel 48
CH49	ITU channel 49
CH50	ITU channel 50
CH51	ITU channel 51
CH52	ITU channel 52
CH53	ITU channel 53
CH54	ITU channel 54
CH55	ITU channel 55
CH56	ITU channel 56
CH57	ITU channel 57

©2026 MICROSENS GmbH & Co. KG - Hamm/Germany - www.microsens.com

CH58	ITU channel 58
CH59	ITU channel 59
CH60	ITU channel 60
CH61	ITU channel 61
CH62	ITU channel 62
CH63	ITU channel 63
OID	1.3.6.1.4.1.3181.10.6.1.94.4.1.4 (txgConfigPort1ItuChannel)

©2026 MICROSENS GmbH & Co. KG - Hamm/Germany - www.microsens.com

port_2_itu_channel	Tunable laser are supported. Select the wavelength from the supplied 100GHZ ITU-T grid. If the wavelength is not supported by the XFP, a warning event will be received.

©2026 MICROSENS GmbH & Co. KG - Hamm/Germany - www.microsens.com

Values

FIXED	Fixed wavelength defined by installed optic
CH11	ITU channel 11
CH12	ITU channel 12
CH13	ITU channel 13
CH14	ITU channel 14
CH15	ITU channel 15
CH16	ITU channel 16
CH17	ITU channel 17
CH18	ITU channel 18
CH19	ITU channel 19
CH20	ITU channel 20
CH21	ITU channel 21
CH22	ITU channel 22
CH23	ITU channel 23
CH24	ITU channel 24
CH25	ITU channel 25
CH26	ITU channel 26
CH27	ITU channel 27
CH28	ITU channel 28
CH29	ITU channel 29
CH30	ITU channel 30
CH31	ITU channel 31
CH32	ITU channel 32
CH33	ITU channel 33
CH34	ITU channel 34
CH35	ITU channel 35
CH36	ITU channel 36
CH37	ITU channel 37
CH38	ITU channel 38
CH39	ITU channel 39
CH40	ITU channel 40
CH41	ITU channel 41
CH42	ITU channel 42
CH43	ITU channel 43
CH44	ITU channel 44
CH45	ITU channel 45
CH46	ITU channel 46
CH47	ITU channel 47
CH48	ITU channel 48
CH49	ITU channel 49
CH50	ITU channel 50
CH51	ITU channel 51
CH52	ITU channel 52
CH53	ITU channel 53
CH54	ITU channel 54
CH55	ITU channel 55
CH56	ITU channel 56
CH57	ITU channel 57

©2026 MICROSENS GmbH & Co. KG - Hamm/Germany - www.microsens.com

	CH58	ITU channel 58
	CH59	ITU channel 59
	CH60	ITU channel 60
	CH61	ITU channel 61
	CH62	ITU channel 62
	CH63	ITU channel 63
OID	1.3.6.1.4.1.3181.10.6.1.94.4.1.5 (txgConfigPort2ItuChannel)	

---

deactivate_port_1

When enabled, the optical interface is disabled and communication is cut.

Values enabled, disabled

OID 1.3.6.1.4.1.3181.10.6.1.94.4.1.6 (txgConfigDeactivatePort1)

---

deactivate_port_2

When enabled, the optical interface is disabled and communication is cut.

Values enabled, disabled

OID 1.3.6.1.4.1.3181.10.6.1.94.4.1.7 (txgConfigDeactivatePort2)

---

front_panel_mode

Determines what is displayed on the front panel, when available. Also controls the modules local buttons.

Values

NORMAL	Displays module name and error conditions
EXTENDED	Cyclical shows various system information and error conditions
NORMAL_LOCKED	Like NORMAL but the module buttons are disabled
EXTENDED_LOCKED	Like EXTENDED but the module buttons are disabled
REMOTE	Display is not updated and can be controlled from remote management system

OID 1.3.6.1.4.1.3181.10.6.1.94.4.1.8 (txgConfigFrontPanelMode)

---

loss_of_signal_handling

When set to LOCAL a loss of input signal will not affect another port. When set to PERCOLATE, a loss of signal will turn off the transmitter of the other port.

Values

LOCAL	Laser is always turned on when port is enabled
PERCOLATE	Laser is turned off when receiver of associated port is down

OID 1.3.6.1.4.1.3181.10.6.1.94.4.1.9 (txgConfigLossOfSignalHandling)

©2026 MICROSENS GmbH & Co. KG - Hamm/Germany - www.microsens.com

bert_pattern	Defines the bit pattern with which the build-in bit error rate tester (BERT) operates when cross connect is set to BERT.		
	Values	*2_7*	BERT pattern which repeats every 2^7 bits is used
		2_23	BERT pattern which repeats every 2^23 bits is used
		2_31	BERT pattern which repeats every 2^31 bits is used
		CJ_PAT	BERT pattern for 8B10 code testing (X2G, OFX-3 only)
		CR_PAT	BERT pattern for 8B10 code testing (X2G, OFX-3 only)
		8B_10B_CNT	BERT pattern for 8B10 code testing (X2G, OFX-3 only)
	OID	1.3.6.1.4.1.3181.10.6.1.94.4.1.10 (txgConfigBertPattern)	
sfp_delta_interval	This enables and defines the interval in which the optical receive power level of each SFP/XFP is read and compared to previous value.		
	Values	*DISABLED*	Optical receiver power delta detection is disabled
		1_SEC	Optical receive power is compared every second
		5_SEC	Optical receive power is compared every 5 seconds
		10_SEC	Optical receive power is compared every 10 seconds
		30_SEC	Optical receive power is compared every 30 seconds
		60_SEC	Optical receive power is compared every minute
		240_SEC	Optical receive power is compared every 4 minutes
	OID	1.3.6.1.4.1.3181.10.6.1.94.4.1.11 (txgConfigSfpDeltaInterval)	
sfp_delta_threshold	This defines how much the optical receive power level can differ between successive reads before a warning trap is generated.		
	Values	*0_5_DB*	An event is generated if power level varies more then half a dB
		1_DB	An event is generated if power level varies more then 1 dB
		1_5_DB	An event is generated if power level varies more then 1.5 dB
		2_DB	An event is generated if power level varies more then 2 dB
		3_DB	An event is generated if power level varies more then 3 dB
		5_DB	An event is generated if power level varies more then 5 dB
	OID	1.3.6.1.4.1.3181.10.6.1.94.4.1.12 (txgConfigSfpDeltaThreshold)	

©2026 MICROSENS GmbH & Co. KG - Hamm/Germany - www.microsens.com

Group	**cxg_plus_config**, for all module slots[0..11]
Path	Device.MSP1000.cxg_plus_config[slot]
Description	This table is used to define any CXG+ or OFC-10 modules in the system.

cxg_port_1_2_datarate	The CXG relies on the features of the XFP to define its data rate. Since various XFP offer different rates with the same settings, only a general setting is provided. Both ports must operate at the same rate.		
	Values	*TRANSPARENT*	No clock recovery is used. May result in bit errors when there is too little optical budget available
		8X_FC	Lower speed SFP+/XFP setting. Usually 8xFC when matching SFP+/XFP are inserted
		10G_ETH	High speed SFP+/XFP setting. Usually 10G when 8G/10G SFP+/XFP are inserted
		10X_FC_16X_FC	Both SFP+XFP control bits are set. Results depend on plugged-in module. May be 10x FibreChannel, 16x FibreChannel or undetermined.
	OID	1.3.6.1.4.1.3181.10.6.1.94.5.1.2 (cxgPlusConfigCxgPort12Datarate)	
cxg_port_3_4_datarate	The CXG relies on the features of the XFP to define its data rate. Since various XFP offer different rates with the same settings, only a general setting is provided. Both ports must operate at the same rate.		
	Values	*TRANSPARENT*	No clock recovery is used. May result in bit errors when there is too little optical budget available
		8X_FC	Lower speed SFP+/XFP setting. Usually 8xFC when matching SFP+/XFP are inserted
		10G_ETH	High speed SFP+/XFP setting. Usually 10G when 8G/10G SFP+/XFP are inserted
		10X_FC_16X_FC	Both SFP+XFP control bits are set. Results depend on plugged-in module. May be 10x FibreChannel, 16x FibreChannel or undetermined.
	OID	1.3.6.1.4.1.3181.10.6.1.94.5.1.3 (cxgPlusConfigCxgPort34Datarate)	

©2026 MICROSENS GmbH & Co. KG - Hamm/Germany - www.microsens.com

port_1_itu_channel	Tunable laser are supported. Select the wavelength from the supplied 100GHZ ITU-T grid. If the wavelength is not supported by the XFP, a warning event will be received.

©2026 MICROSENS GmbH & Co. KG - Hamm/Germany - www.microsens.com

Values

FIXED	Fixed wavelength defined by installed optic
CH11	ITU channel 11
CH12	ITU channel 12
CH13	ITU channel 13
CH14	ITU channel 14
CH15	ITU channel 15
CH16	ITU channel 16
CH17	ITU channel 17
CH18	ITU channel 18
CH19	ITU channel 19
CH20	ITU channel 20
CH21	ITU channel 21
CH22	ITU channel 22
CH23	ITU channel 23
CH24	ITU channel 24
CH25	ITU channel 25
CH26	ITU channel 26
CH27	ITU channel 27
CH28	ITU channel 28
CH29	ITU channel 29
CH30	ITU channel 30
CH31	ITU channel 31
CH32	ITU channel 32
CH33	ITU channel 33
CH34	ITU channel 34
CH35	ITU channel 35
CH36	ITU channel 36
CH37	ITU channel 37
CH38	ITU channel 38
CH39	ITU channel 39
CH40	ITU channel 40
CH41	ITU channel 41
CH42	ITU channel 42
CH43	ITU channel 43
CH44	ITU channel 44
CH45	ITU channel 45
CH46	ITU channel 46
CH47	ITU channel 47
CH48	ITU channel 48
CH49	ITU channel 49
CH50	ITU channel 50
CH51	ITU channel 51
CH52	ITU channel 52
CH53	ITU channel 53
CH54	ITU channel 54
CH55	ITU channel 55
CH56	ITU channel 56
CH57	ITU channel 57

©2026 MICROSENS GmbH & Co. KG - Hamm/Germany - www.microsens.com

CH58	ITU channel 58
CH59	ITU channel 59
CH60	ITU channel 60
CH61	ITU channel 61
CH62	ITU channel 62
CH63	ITU channel 63
OID	1.3.6.1.4.1.3181.10.6.1.94.5.1.4 (cxgPlusConfigPort1ItuChannel)

port_2_itu_channel	Tunable laser are supported. Select the wavelength from the supplied 100GHZ ITU-T grid. If the wavelength is not supported by the XFP, a warning event will be received.

©2026 MICROSENS GmbH & Co. KG - Hamm/Germany - www.microsens.com

Values

FIXED	Fixed wavelength defined by installed optic
CH11	ITU channel 11
CH12	ITU channel 12
CH13	ITU channel 13
CH14	ITU channel 14
CH15	ITU channel 15
CH16	ITU channel 16
CH17	ITU channel 17
CH18	ITU channel 18
CH19	ITU channel 19
CH20	ITU channel 20
CH21	ITU channel 21
CH22	ITU channel 22
CH23	ITU channel 23
CH24	ITU channel 24
CH25	ITU channel 25
CH26	ITU channel 26
CH27	ITU channel 27
CH28	ITU channel 28
CH29	ITU channel 29
CH30	ITU channel 30
CH31	ITU channel 31
CH32	ITU channel 32
CH33	ITU channel 33
CH34	ITU channel 34
CH35	ITU channel 35
CH36	ITU channel 36
CH37	ITU channel 37
CH38	ITU channel 38
CH39	ITU channel 39
CH40	ITU channel 40
CH41	ITU channel 41
CH42	ITU channel 42
CH43	ITU channel 43
CH44	ITU channel 44
CH45	ITU channel 45
CH46	ITU channel 46
CH47	ITU channel 47
CH48	ITU channel 48
CH49	ITU channel 49
CH50	ITU channel 50
CH51	ITU channel 51
CH52	ITU channel 52
CH53	ITU channel 53
CH54	ITU channel 54
CH55	ITU channel 55
CH56	ITU channel 56
CH57	ITU channel 57

©2026 MICROSENS GmbH & Co. KG - Hamm/Germany - www.microsens.com

CH58	ITU channel 58
CH59	ITU channel 59
CH60	ITU channel 60
CH61	ITU channel 61
CH62	ITU channel 62
CH63	ITU channel 63
OID	1.3.6.1.4.1.3181.10.6.1.94.5.1.5 (cxgPlusConfigPort2ItuChannel)

©2026 MICROSENS GmbH & Co. KG - Hamm/Germany - www.microsens.com

port_3_itu_channel	Tunable laser are supported. Select the wavelength from the supplied 100GHZ ITU-T grid. If the wavelength is not supported by the XFP, a warning event will be received.

©2026 MICROSENS GmbH & Co. KG - Hamm/Germany - www.microsens.com

Values

FIXED	Fixed wavelength defined by installed optic
CH11	ITU channel 11
CH12	ITU channel 12
CH13	ITU channel 13
CH14	ITU channel 14
CH15	ITU channel 15
CH16	ITU channel 16
CH17	ITU channel 17
CH18	ITU channel 18
CH19	ITU channel 19
CH20	ITU channel 20
CH21	ITU channel 21
CH22	ITU channel 22
CH23	ITU channel 23
CH24	ITU channel 24
CH25	ITU channel 25
CH26	ITU channel 26
CH27	ITU channel 27
CH28	ITU channel 28
CH29	ITU channel 29
CH30	ITU channel 30
CH31	ITU channel 31
CH32	ITU channel 32
CH33	ITU channel 33
CH34	ITU channel 34
CH35	ITU channel 35
CH36	ITU channel 36
CH37	ITU channel 37
CH38	ITU channel 38
CH39	ITU channel 39
CH40	ITU channel 40
CH41	ITU channel 41
CH42	ITU channel 42
CH43	ITU channel 43
CH44	ITU channel 44
CH45	ITU channel 45
CH46	ITU channel 46
CH47	ITU channel 47
CH48	ITU channel 48
CH49	ITU channel 49
CH50	ITU channel 50
CH51	ITU channel 51
CH52	ITU channel 52
CH53	ITU channel 53
CH54	ITU channel 54
CH55	ITU channel 55
CH56	ITU channel 56
CH57	ITU channel 57

©2026 MICROSENS GmbH & Co. KG - Hamm/Germany - www.microsens.com

CH58	ITU channel 58
CH59	ITU channel 59
CH60	ITU channel 60
CH61	ITU channel 61
CH62	ITU channel 62
CH63	ITU channel 63
OID	1.3.6.1.4.1.3181.10.6.1.94.5.1.6 (cxgPlusConfigPort3ItuChannel)

©2026 MICROSENS GmbH & Co. KG - Hamm/Germany - www.microsens.com

port_4_itu_channel	Tunable laser are supported. Select the wavelength from the supplied 100GHZ ITU-T grid. If the wavelength is not supported by the XFP, a warning event will be received.

©2026 MICROSENS GmbH & Co. KG - Hamm/Germany - www.microsens.com

Values

FIXED	Fixed wavelength defined by installed optic
CH11	ITU channel 11
CH12	ITU channel 12
CH13	ITU channel 13
CH14	ITU channel 14
CH15	ITU channel 15
CH16	ITU channel 16
CH17	ITU channel 17
CH18	ITU channel 18
CH19	ITU channel 19
CH20	ITU channel 20
CH21	ITU channel 21
CH22	ITU channel 22
CH23	ITU channel 23
CH24	ITU channel 24
CH25	ITU channel 25
CH26	ITU channel 26
CH27	ITU channel 27
CH28	ITU channel 28
CH29	ITU channel 29
CH30	ITU channel 30
CH31	ITU channel 31
CH32	ITU channel 32
CH33	ITU channel 33
CH34	ITU channel 34
CH35	ITU channel 35
CH36	ITU channel 36
CH37	ITU channel 37
CH38	ITU channel 38
CH39	ITU channel 39
CH40	ITU channel 40
CH41	ITU channel 41
CH42	ITU channel 42
CH43	ITU channel 43
CH44	ITU channel 44
CH45	ITU channel 45
CH46	ITU channel 46
CH47	ITU channel 47
CH48	ITU channel 48
CH49	ITU channel 49
CH50	ITU channel 50
CH51	ITU channel 51
CH52	ITU channel 52
CH53	ITU channel 53
CH54	ITU channel 54
CH55	ITU channel 55
CH56	ITU channel 56
CH57	ITU channel 57

©2026 MICROSENS GmbH & Co. KG - Hamm/Germany - www.microsens.com

	CH58	ITU channel 58
	CH59	ITU channel 59
	CH60	ITU channel 60
	CH61	ITU channel 61
	CH62	ITU channel 62
	CH63	ITU channel 63

OID 1.3.6.1.4.1.3181.10.6.1.94.5.1.7 (cxgPlusConfigPort4ItuChannel)

---

deactivate_port_1

When enabled, the optical interface is disabled and communication is cut.

Values enabled, disabled

OID 1.3.6.1.4.1.3181.10.6.1.94.5.1.8 (cxgPlusConfigDeactivatePort1)

---

deactivate_port_2

When enabled, the optical interface is disabled and communication is cut.

Values enabled, disabled

OID 1.3.6.1.4.1.3181.10.6.1.94.5.1.9 (cxgPlusConfigDeactivatePort2)

---

deactivate_port_3

When enabled, the optical interface is disabled and communication is cut.

Values enabled, disabled

OID 1.3.6.1.4.1.3181.10.6.1.94.5.1.10 (cxgPlusConfigDeactivatePort3)

---

deactivate_port_4

When enabled, the optical interface is disabled and communication is cut.

Values enabled, disabled

OID 1.3.6.1.4.1.3181.10.6.1.94.5.1.11 (cxgPlusConfigDeactivatePort4)

---

front_panel_mode

Determines what is displayed on the front panel, when available. Also controls the modules local buttons.

Values	*NORMAL*	Displays module name and error conditions
	EXTENDED	Cyclical shows various system information and error conditions
	NORMAL_LOCKED	Like NORMAL but the module buttons are disabled
	EXTENDED_LOCKED	Like EXTENDED but the module buttons are disabled
	REMOTE	Display is not updated and can be controlled from remote management system

OID 1.3.6.1.4.1.3181.10.6.1.94.5.1.12 (cxgPlusConfigFrontPanelMode)

©2026 MICROSENS GmbH & Co. KG - Hamm/Germany - www.microsens.com

loss_of_signal_handling	When set to LOCAL a loss of input signal will not affect another port. When set to PERCOLATE, a loss of signal will turn off the transmitter of the other port. **Values** *LOCAL* Laser is always turned on when port is enabled *PERCOLATE* Laser is turned off when receiver of associated port is down **OID** 1.3.6.1.4.1.3181.10.6.1.94.5.1.13 (cxgPlusConfigLossOfSignalHandling)
sfp_delta_interval	This enables and defines the interval in which the optical receive power level of each SFP/XFP is read and compared to previous value. **Values** *DISABLED* Optical receiver power delta detection is disabled *1_SEC* Optical receive power is compared every second *5_SEC* Optical receive power is compared every 5 seconds *10_SEC* Optical receive power is compared every 10 seconds *30_SEC* Optical receive power is compared every 30 seconds *60_SEC* Optical receive power is compared every minute *240_SEC* Optical receive power is compared every 4 minutes **OID** 1.3.6.1.4.1.3181.10.6.1.94.5.1.14 (cxgPlusConfigSfpDeltaInterval)
sfp_delta_threshold	This defines how much the optical receive power level can differ between successive reads before a warning trap is generated. **Values** *0_5_DB* An event is generated if power level varies more then half a dB *1_DB* An event is generated if power level varies more then 1 dB *1_5_DB* An event is generated if power level varies more then 1.5 dB *2_DB* An event is generated if power level varies more then 2 dB *3_DB* An event is generated if power level varies more then 3 dB *5_DB* An event is generated if power level varies more then 5 dB **OID** 1.3.6.1.4.1.3181.10.6.1.94.5.1.15 (cxgPlusConfigSfpDeltaThreshold)

Group	**cxg_config**, for all module slots[0..11]
Path	Device.MSP1000.cxg_config[slot]
Description	This table is used to define any CXG or XCM-3 modules in the system.

©2026 MICROSENS GmbH & Co. KG - Hamm/Germany - www.microsens.com

cxg_port_1_2_datarate	The CXG relies on the features of the XFP to define its data rate. Since various XFP offer different rates with the same settings, only a general setting is provided. Both ports must operate at the same rate.		
	Values	*TRANSPARENT*	No clock recovery is used. May result in bit errors when there is too little optical budget available
		8X_FC	Lower speed SFP+/XFP setting. Usually 8xFC when matching SFP+/XFP are inserted
		10G_ETH	High speed SFP+/XFP setting. Usually 10G when 8G/10G SFP+/XFP are inserted
		10X_FC_16X_FC	Both SFP+XFP control bits are set. Results depend on plugged-in module. May be 10x FibreChannel, 16x FibreChannel or undetermined.
	OID	1.3.6.1.4.1.3181.10.6.1.94.6.1.2 (cxgConfigCxgPort12Datarate)	

©2026 MICROSENS GmbH & Co. KG - Hamm/Germany - www.microsens.com

port_1_itu_channel	Tunable laser are supported. Select the wavelength from the supplied 100GHZ ITU-T grid. If the wavelength is not supported by the XFP, a warning event will be received.

©2026 MICROSENS GmbH & Co. KG - Hamm/Germany - www.microsens.com

Values

FIXED	Fixed wavelength defined by installed optic
CH11	ITU channel 11
CH12	ITU channel 12
CH13	ITU channel 13
CH14	ITU channel 14
CH15	ITU channel 15
CH16	ITU channel 16
CH17	ITU channel 17
CH18	ITU channel 18
CH19	ITU channel 19
CH20	ITU channel 20
CH21	ITU channel 21
CH22	ITU channel 22
CH23	ITU channel 23
CH24	ITU channel 24
CH25	ITU channel 25
CH26	ITU channel 26
CH27	ITU channel 27
CH28	ITU channel 28
CH29	ITU channel 29
CH30	ITU channel 30
CH31	ITU channel 31
CH32	ITU channel 32
CH33	ITU channel 33
CH34	ITU channel 34
CH35	ITU channel 35
CH36	ITU channel 36
CH37	ITU channel 37
CH38	ITU channel 38
CH39	ITU channel 39
CH40	ITU channel 40
CH41	ITU channel 41
CH42	ITU channel 42
CH43	ITU channel 43
CH44	ITU channel 44
CH45	ITU channel 45
CH46	ITU channel 46
CH47	ITU channel 47
CH48	ITU channel 48
CH49	ITU channel 49
CH50	ITU channel 50
CH51	ITU channel 51
CH52	ITU channel 52
CH53	ITU channel 53
CH54	ITU channel 54
CH55	ITU channel 55
CH56	ITU channel 56
CH57	ITU channel 57

©2026 MICROSENS GmbH & Co. KG - Hamm/Germany - www.microsens.com

CH58	ITU channel 58
CH59	ITU channel 59
CH60	ITU channel 60
CH61	ITU channel 61
CH62	ITU channel 62
CH63	ITU channel 63
OID	1.3.6.1.4.1.3181.10.6.1.94.6.1.3 (cxgConfigPort1ItuChannel)

©2026 MICROSENS GmbH & Co. KG - Hamm/Germany - www.microsens.com

port_2_itu_channel	Tunable laser are supported. Select the wavelength from the supplied 100GHZ ITU-T grid. If the wavelength is not supported by the XFP, a warning event will be received.

©2026 MICROSENS GmbH & Co. KG - Hamm/Germany - www.microsens.com

Values

FIXED	Fixed wavelength defined by installed optic
CH11	ITU channel 11
CH12	ITU channel 12
CH13	ITU channel 13
CH14	ITU channel 14
CH15	ITU channel 15
CH16	ITU channel 16
CH17	ITU channel 17
CH18	ITU channel 18
CH19	ITU channel 19
CH20	ITU channel 20
CH21	ITU channel 21
CH22	ITU channel 22
CH23	ITU channel 23
CH24	ITU channel 24
CH25	ITU channel 25
CH26	ITU channel 26
CH27	ITU channel 27
CH28	ITU channel 28
CH29	ITU channel 29
CH30	ITU channel 30
CH31	ITU channel 31
CH32	ITU channel 32
CH33	ITU channel 33
CH34	ITU channel 34
CH35	ITU channel 35
CH36	ITU channel 36
CH37	ITU channel 37
CH38	ITU channel 38
CH39	ITU channel 39
CH40	ITU channel 40
CH41	ITU channel 41
CH42	ITU channel 42
CH43	ITU channel 43
CH44	ITU channel 44
CH45	ITU channel 45
CH46	ITU channel 46
CH47	ITU channel 47
CH48	ITU channel 48
CH49	ITU channel 49
CH50	ITU channel 50
CH51	ITU channel 51
CH52	ITU channel 52
CH53	ITU channel 53
CH54	ITU channel 54
CH55	ITU channel 55
CH56	ITU channel 56
CH57	ITU channel 57

©2026 MICROSENS GmbH & Co. KG - Hamm/Germany - www.microsens.com

	CH58	ITU channel 58
	CH59	ITU channel 59
	CH60	ITU channel 60
	CH61	ITU channel 61
	CH62	ITU channel 62
	CH63	ITU channel 63

OID 1.3.6.1.4.1.3181.10.6.1.94.6.1.4 (cxgConfigPort2ItuChannel)

---

deactivate_port_1

When enabled, the optical interface is disabled and communication is cut.

Values enabled, disabled

OID 1.3.6.1.4.1.3181.10.6.1.94.6.1.5 (cxgConfigDeactivatePort1)

---

deactivate_port_2

When enabled, the optical interface is disabled and communication is cut.

Values enabled, disabled

OID 1.3.6.1.4.1.3181.10.6.1.94.6.1.6 (cxgConfigDeactivatePort2)

---

front_panel_mode

Determines what is displayed on the front panel, when available. Also controls the modules local buttons.

Values

NORMAL	Displays module name and error conditions
EXTENDED	Cyclical shows various system information and error conditions
NORMAL_LOCKED	Like NORMAL but the module buttons are disabled
EXTENDED_LOCKED	Like EXTENDED but the module buttons are disabled
REMOTE	Display is not updated and can be controlled from remote management system

OID 1.3.6.1.4.1.3181.10.6.1.94.6.1.7 (cxgConfigFrontPanelMode)

---

loss_of_signal_handling

When set to LOCAL a loss of input signal will not affect another port. When set to PERCOLATE, a loss of signal will turn off the transmitter of the other port.

Values

LOCAL	Laser is always turned on when port is enabled
PERCOLATE	Laser is turned off when receiver of associated port is down

OID 1.3.6.1.4.1.3181.10.6.1.94.6.1.8 (cxgConfigLossOfSignalHandling)

©2026 MICROSENS GmbH & Co. KG - Hamm/Germany - www.microsens.com

sfp_delta_interval	This enables and defines the interval in which the optical receive power level of each SFP/XFP is read and compared to previous value. **Values** *DISABLED* Optical receiver power delta detection is disabled *1_SEC* Optical receive power is compared every second *5_SEC* Optical receive power is compared every 5 seconds *10_SEC* Optical receive power is compared every 10 seconds *30_SEC* Optical receive power is compared every 30 seconds *60_SEC* Optical receive power is compared every minute *240_SEC* Optical receive power is compared every 4 minutes **OID** 1.3.6.1.4.1.3181.10.6.1.94.6.1.9 (cxgConfigSfpDeltaInterval)
sfp_delta_threshold	This defines how much the optical receive power level can differ between successive reads before a warning trap is generated. **Values** *0_5_DB* An event is generated if power level varies more then half a dB *1_DB* An event is generated if power level varies more then 1 dB *1_5_DB* An event is generated if power level varies more then 1.5 dB *2_DB* An event is generated if power level varies more then 2 dB *3_DB* An event is generated if power level varies more then 3 dB *5_DB* An event is generated if power level varies more then 5 dB **OID** 1.3.6.1.4.1.3181.10.6.1.94.6.1.10 (cxgConfigSfpDeltaThreshold)

Group	**t4g_config**, for all module slots[0..11]
Path	Device.MSP1000.t4g_config[slot]
Description	This table is used to define any T4G or OFC-4 modules in the system.

©2026 MICROSENS GmbH & Co. KG - Hamm/Germany - www.microsens.com

t4g_port_1_2_datarate

The CXG relies on the features of the XFP to define its data rate. Since various XFP offer different rates with the same settings, only a general setting is provided. Both ports must operate at the same rate.

Values

TRANSPARENT	Transparent. No clock recovery is used
100M_ETH	Port speed 125 Mbps (Fast Ethernet)
1G_ETH	Port speed 1250 Mbps (Gigabit Ethernet)
ESCON	Port speed 200M, (X2G, OFX-3 only)
1X_FC	Port speed 1062 Mbps (1G Fibre Channel)
2X_FC	Port speed 2125 Mbps (2G Fibre Channel)
4X_FC	Port speed 4250 Mbps (4G Fibre Channel)
INFINIBAND	Port speed 2500 Mbps (Infiniband)
OC_3	Port speed 155 Mbps (OC-3 / STM-1)
OC_12	Port speed 622 Mbps (OC-12 / STM-4)
OC_48	Port speed 2048 Mbps (OC-48 / STM-16)

OID 1.3.6.1.4.1.3181.10.6.1.94.7.1.2 (t4gConfigT4gPort12Datarate)

t4g_port_3_4_datarate

Tunable laser are supported. Select the wavelength from the supplied 100GHZ ITU-T grid. If the wavelength is not supported by the XFP, a warning event will be received.

Values

TRANSPARENT	Transparent. No clock recovery is used
100M_ETH	Port speed 125 Mbps (Fast Ethernet)
1G_ETH	Port speed 1250 Mbps (Gigabit Ethernet)
ESCON	Port speed 200M, (X2G, OFX-3 only)
1X_FC	Port speed 1062 Mbps (1G Fibre Channel)
2X_FC	Port speed 2125 Mbps (2G Fibre Channel)
4X_FC	Port speed 4250 Mbps (4G Fibre Channel)
INFINIBAND	Port speed 2500 Mbps (Infiniband)
OC_3	Port speed 155 Mbps (OC-3 / STM-1)
OC_12	Port speed 622 Mbps (OC-12 / STM-4)
OC_48	Port speed 2048 Mbps (OC-48 / STM-16)

OID 1.3.6.1.4.1.3181.10.6.1.94.7.1.3 (t4gConfigT4gPort34Datarate)

©2026 MICROSENS GmbH & Co. KG - Hamm/Germany - www.microsens.com

t4g_operation_mode	This parameter defines the data path through the module when an internal cross connect is available. It is also used to setup a permanent bit error rate test. (most settings apply to X2G, TXG, OFX-3, XCM-2 only)		
	Values	*DISABLED*	All ports are disabled
		TRANSPONDER	Received clock is recovered and then used for transmitter. P1 connects to P2, P3 connects to P4
		BERT_PORT_4	Port 4 is used as bit error rate tester (BERT). All other ports are unused.
	OID	1.3.6.1.4.1.3181.10.6.1.94.7.1.4 (t4gConfigT4gOperationMode)	
deactivate_port_1	When enabled, the optical interface is disabled and communication is cut.		
	Values	enabled, disabled	
	OID	1.3.6.1.4.1.3181.10.6.1.94.7.1.5 (t4gConfigDeactivatePort1)	
deactivate_port_2	When enabled, the optical interface is disabled and communication is cut.		
	Values	enabled, disabled	
	OID	1.3.6.1.4.1.3181.10.6.1.94.7.1.6 (t4gConfigDeactivatePort2)	
deactivate_port_3	When enabled, the optical interface is disabled and communication is cut.		
	Values	enabled, disabled	
	OID	1.3.6.1.4.1.3181.10.6.1.94.7.1.7 (t4gConfigDeactivatePort3)	
deactivate_port_4	When enabled, the optical interface is disabled and communication is cut.		
	Values	enabled, disabled	
	OID	1.3.6.1.4.1.3181.10.6.1.94.7.1.8 (t4gConfigDeactivatePort4)	
front_panel_mode	Determines what is displayed on the front panel, when available. Also controls the modules local buttons.		
	Values	*NORMAL*	Displays module name and error conditions
		EXTENDED	Cyclical shows various system information and error conditions
		NORMAL_LOCKED	Like NORMAL but the module buttons are disabled
		EXTENDED_LOCKED	Like EXTENDED but the module buttons are disabled
		REMOTE	Display is not updated and can be controlled from remote management system
	OID	1.3.6.1.4.1.3181.10.6.1.94.7.1.9 (t4gConfigFrontPanelMode)	

©2026 MICROSENS GmbH & Co. KG - Hamm/Germany - www.microsens.com

loss_of_signal_handling	When set to LOCAL a loss of input signal will not affect another port. When set to PERCOLATE, a loss of signal will turn off the transmitter of the other port.		
	Values	*LOCAL*	Laser is always turned on when port is enabled
		PERCOLATE	Laser is turned off when receiver of associated port is down
	OID	1.3.6.1.4.1.3181.10.6.1.94.7.1.10 (t4gConfigLossOfSignalHandling)	
bert_pattern	Defines the bit pattern with which the build-in bit error rate tester (BERT) operates when cross connect is set to BERT.		
	Values	*2_7*	BERT pattern which repeats every 2^7 bits is used
		2_23	BERT pattern which repeats every 2^23 bits is used
		2_31	BERT pattern which repeats every 2^31 bits is used
		CJ_PAT	BERT pattern for 8B10 code testing (X2G, OFX-3 only)
		CR_PAT	BERT pattern for 8B10 code testing (X2G, OFX-3 only)
		8B_10B_CNT	BERT pattern for 8B10 code testing (X2G, OFX-3 only)
	OID	1.3.6.1.4.1.3181.10.6.1.94.7.1.11 (t4gConfigBertPattern)	
sfp_delta_interval	This enables and defines the interval in which the optical receive power level of each SFP/XFP is read and compared to previous value.		
	Values	*DISABLED*	Optical receiver power delta detection is disabled
		1_SEC	Optical receive power is compared every second
		5_SEC	Optical receive power is compared every 5 seconds
		10_SEC	Optical receive power is compared every 10 seconds
		30_SEC	Optical receive power is compared every 30 seconds
		60_SEC	Optical receive power is compared every minute
		240_SEC	Optical receive power is compared every 4 minutes
	OID	1.3.6.1.4.1.3181.10.6.1.94.7.1.12 (t4gConfigSfpDeltaInterval)	

©2026 MICROSENS GmbH & Co. KG - Hamm/Germany - www.microsens.com

sfp_delta_threshold	This defines how much the optical receive power level can differ between successive reads before a warning trap is generated. **Values** *0_5_DB* An event is generated if power level varies more then half a dB *1_DB* An event is generated if power level varies more then 1 dB *1_5_DB* An event is generated if power level varies more then 1.5 dB *2_DB* An event is generated if power level varies more then 2 dB *3_DB* An event is generated if power level varies more then 3 dB *5_DB* An event is generated if power level varies more then 5 dB **OID** 1.3.6.1.4.1.3181.10.6.1.94.7.1.13 (t4gConfigSfpDeltaThreshold)

Group	**m2g_config**, for all module slots[0..11]
Path	Device.MSP1000.m2g_config[slot]
Description	This table is used to define any M2G or TDM-2 modules in the system.

channel_1_datarate	Devices the data rate of the first TDM channel (port 1) **Values** *DISABLED* Local port is disabled *1G_ETH* Gigabit Ethernet *1X_FC* FibreChannel **OID** 1.3.6.1.4.1.3181.10.6.1.94.8.1.2 (m2gConfigChannel1Datarate)
channel_2_datarate	Devices the data rate of the second TDM channel (port 2) **Values** *DISABLED* Local port is disabled *1G_ETH* Gigabit Ethernet *1X_FC* FibreChannel **OID** 1.3.6.1.4.1.3181.10.6.1.94.8.1.3 (m2gConfigChannel2Datarate)
port_1_copper_sfp	Set when local copper RJ45 SFP is used and connection cannot be established. **Values** enabled, disabled **OID** 1.3.6.1.4.1.3181.10.6.1.94.8.1.4 (m2gConfigPort1CopperSfp)
port_2_copper_sfp	Set when local copper RJ45 SFP is used and connection cannot be established. **Values** enabled, disabled **OID** 1.3.6.1.4.1.3181.10.6.1.94.8.1.5 (m2gConfigPort2CopperSfp)

©2026 MICROSENS GmbH & Co. KG - Hamm/Germany - www.microsens.com

sfp_delta_interval	This enables and defines the interval in which the optical receive power level of each SFP/XFP is read and compared to previous value. **Values** *DISABLED* Optical receiver power delta detection is disabled *1_SEC* Optical receive power is compared every second *5_SEC* Optical receive power is compared every 5 seconds *10_SEC* Optical receive power is compared every 10 seconds *30_SEC* Optical receive power is compared every 30 seconds *60_SEC* Optical receive power is compared every minute *240_SEC* Optical receive power is compared every 4 minutes **OID** 1.3.6.1.4.1.3181.10.6.1.94.8.1.6 (m2gConfigSfpDeltaInterval)
sfp_delta_threshold	This defines how much the optical receive power level can differ between successive reads before a warning trap is generated. **Values** *0_5_DB* An event is generated if power level varies more then half a dB *1_DB* An event is generated if power level varies more then 1 dB *1_5_DB* An event is generated if power level varies more then 1.5 dB *2_DB* An event is generated if power level varies more then 2 dB *3_DB* An event is generated if power level varies more then 3 dB *5_DB* An event is generated if power level varies more then 5 dB **OID** 1.3.6.1.4.1.3181.10.6.1.94.8.1.7 (m2gConfigSfpDeltaThreshold)
link_backup_trigger	Defines under which optical signal condition an automated backup is initiated. **Values** *DISABLED* No automatic link backup *SIGNAL_LOSS* Switch backup on link signal loss *ERROR_BURST* Switch backup when a high error rate on the link is detected or on loss of signal **OID** 1.3.6.1.4.1.3181.10.6.1.94.8.1.8 (m2gConfigLinkBackupTrigger)
stay_with_last_link	When set the backup switch remains in last position even when signal returns. Still the backup warning turns off after the delay set under backup_end parameter expires. **Values** enabled, disabled **OID** 1.3.6.1.4.1.3181.10.6.1.94.8.1.9 (m2gConfigStayWithLastLink)

©2026 MICROSENS GmbH & Co. KG - Hamm/Germany - www.microsens.com

backup_end	Defines how long the signal must remain steady before proper operation is assumed and the backup is terminated. **Values** *NO_DELAY* Immediately switch off backup when missing signal returns *15_SECONDS* When missing signal returns wait for 15 seconds during which no further signal loss must occur. Only then switch off the backup path *15_MINUTES* When missing signal returns wait for 15 minutes during which no further signal loss must occur. Only then switch off the backup path *MANUALLY* Do not switchback automatically. Use action command to switch off backup **OID** 1.3.6.1.4.1.3181.10.6.1.94.8.1.10 (m2gConfigBackupEnd)
permit_link_override	Permits the manual selection of a failed link using the link selection. Defaults to false to safeguard against accidental link selection which would result in loss of connection. **Values** enabled, disabled **OID** 1.3.6.1.4.1.3181.10.6.1.94.8.1.11 (m2gConfigPermitLinkOverride)

Group	**om1_config**, for all module slots[0..11]
Path	Device.MSP1000.om1_config[slot]
Description	

wavelength_port_a	Defines which wavelength band is measured. Use 1550 setting when a WDM link is measured. **Values** *1550NM* Use 1550nm window. Use when DWDM is used *1310NM* Use with 1310ns window *DISABLED* Do not measure this port at all **OID** 1.3.6.1.4.1.3181.10.6.1.94.9.1.2 (om1ConfigWavelengthPortA)
low_threshold_port_a	Defines the lower optical signal level in dBm. A signal level below this threshold will trigger an event. **Value** String, max. 16 characters. **OID** 1.3.6.1.4.1.3181.10.6.1.94.9.1.3 (om1ConfigLowThresholdPortA)
high_threshold_port_a	Defines the upper optical signal level in dBm. A signal level above this threshold will trigger an event. **Value** String, max. 16 characters. **OID** 1.3.6.1.4.1.3181.10.6.1.94.9.1.4 (om1ConfigHighThresholdPortA)

©2026 MICROSENS GmbH & Co. KG - Hamm/Germany - www.microsens.com

wavelength_port_b	Defines which wavelength band is measured. Use 1550 setting when a WDM link is measured. **Values** *1550NM* Use 1550nm window. Use when DWDM is used *1310NM* Use with 1310ns window *DISABLED* Do not measure this port at all **OID** 1.3.6.1.4.1.3181.10.6.1.94.9.1.5 (om1ConfigWavelengthPortB)
low_threshold_port_b	Defines the lower optical signal level in dBm. A signal level below this threshold will trigger an event. **Value** String, max. 16 characters. **OID** 1.3.6.1.4.1.3181.10.6.1.94.9.1.6 (om1ConfigLowThresholdPortB)
high_threshold_port_b	Defines the upper optical signal level in dBm. A signal level above this threshold will trigger an event. **Value** String, max. 16 characters. **OID** 1.3.6.1.4.1.3181.10.6.1.94.9.1.7 (om1ConfigHighThresholdPortB)
front_panel_mode	Determines what is displayed on the front panel, when available. Also controls the modules local buttons. **Values** *NORMAL* Displays module name and error conditions *EXTENDED* Cyclical shows various system information and error conditions *NORMAL_LOCKED* Like NORMAL but the module buttons are disabled *EXTENDED_LOCKED* Like EXTENDED but the module buttons are disabled *REMOTE* Display is not updated and can be controlled from remote management system **OID** 1.3.6.1.4.1.3181.10.6.1.94.9.1.8 (om1ConfigFrontPanelMode)

Group	**lp1_config**, for all module slots[0..11]
Path	Device.MSP1000.lp1_config[slot]
Description	
wavelength_port_a	Defines which wavelength band is measured. Use 1550 setting when a WDM link is measured. **Values** *1550NM* Use 1550nm window. Use when DWDM is used *1310NM* Use with 1310ns window *DISABLED* Do not measure this port at all **OID** 1.3.6.1.4.1.3181.10.6.1.94.10.1.2 (lp1ConfigWavelengthPortA)

©2026 MICROSENS GmbH & Co. KG - Hamm/Germany - www.microsens.com

low_threshold_port_a	Defines the lower optical signal level in dBm. A signal level below this threshold will trigger an event and a backup when configured. **Value** String, max. 16 characters. **OID** 1.3.6.1.4.1.3181.10.6.1.94.10.1.3 (lp1ConfigLowThresholdPortA)
high_threshold_port_a	Defines the upper optical signal level in dBm. A signal level above this threshold will trigger an event and a backup when configured. **Value** String, max. 16 characters. **OID** 1.3.6.1.4.1.3181.10.6.1.94.10.1.4 (lp1ConfigHighThresholdPortA)
wavelength_port_b	Defines which wavelength band is measured. Use 1550 setting when a WDM link is measured. **Values** *1550NM* Use 1550nm window. Use when DWDM is used *1310NM* Use with 1310ns window *DISABLED* Do not measure this port at all **OID** 1.3.6.1.4.1.3181.10.6.1.94.10.1.5 (lp1ConfigWavelengthPortB)
low_threshold_port_b	Defines the lower optical signal level in dBm. A signal level below this threshold will trigger an event and a backup when configured. **Value** String, max. 16 characters. **OID** 1.3.6.1.4.1.3181.10.6.1.94.10.1.6 (lp1ConfigLowThresholdPortB)
high_threshold_port_b	Defines the upper optical signal level in dBm. A signal level above this threshold will trigger an event and a backup when configured. **Value** String, max. 16 characters. **OID** 1.3.6.1.4.1.3181.10.6.1.94.10.1.7 (lp1ConfigHighThresholdPortB)
backup_criteria	Defines under which optical signal condition an automated backup is initiated. **Values** *SIGNAL_LOW* Loss of signal or below threshold triggers backup switching *SIGNAL_HIGH* Signal above or below threshold triggers backup switching *MANUALLY* No automatic backup switching. Switching is controlled by ..control.switch_backup actions **OID** 1.3.6.1.4.1.3181.10.6.1.94.10.1.8 (lp1ConfigBackupCriteria)
stay_with_last_link	When set the backup switch remains in last position even when signal return. Still the backup warning turns off after the delay set under backup_end parameter expires. **Values** enabled, disabled **OID** 1.3.6.1.4.1.3181.10.6.1.94.10.1.9 (lp1ConfigStayWithLastLink)

©2026 MICROSENS GmbH & Co. KG - Hamm/Germany - www.microsens.com

backup_end	Defines how long the signal must remain steady before proper operation is assumed and the backup is terminated. **Values** *NO_DELAY* — Immediately switch off backup when missing signal returns *15_SECONDS* — When missing signal returns wait for 15 seconds during which no further signal loss must occur. Only then switch off the backup path *15_MINUTES* — When missing signal returns wait for 15 minutes during which no further signal loss must occur. Only then switch off the backup path *MANUALLY* — Do not switchback automatically. Use action command to switch off backup **OID** 1.3.6.1.4.1.3181.10.6.1.94.10.1.10 (lp1ConfigBackupEnd)
front_panel_mode	Determines what is displayed on the front panel, when available. Also controls the modules local buttons. **Values** *NORMAL* — Displays module name and error conditions *EXTENDED* — Cyclical shows various system information and error conditions *NORMAL_LOCKED* — Like NORMAL but the module buttons are disabled *EXTENDED_LOCKED* — Like EXTENDED but the module buttons are disabled *REMOTE* — Display is not updated and can be controlled from remote management system **OID** 1.3.6.1.4.1.3181.10.6.1.94.10.1.11 (lp1ConfigFrontPanelMode)

Group	**em_config**, for all module slots[0..11]
Path	Device.MSP1000.em_config[slot]
Description	Configuration for EDFA amplifier modules EM2 and EM3.

edfa_operation_mode	Defines which wavelength band is measured. Use 1550 setting when a WDM link is measured. **Values** *PUMP_DISABLED* — Use 1550nm window. Use when DWDM is used *PRE_AMP* — Use with 1310ns window *BOOSTER* — Do not measure this port at all **OID** 1.3.6.1.4.1.3181.10.6.1.94.11.1.2 (emConfigEdfaOperationMode)

©2026 MICROSENS GmbH & Co. KG - Hamm/Germany - www.microsens.com

loss_of_signal_handling	Defines if loss of input signal turns off the EDFA pump (PERCOLATE) or not (LOCAL) **Values** *LOCAL* Laser is always turned on when port is enabled *PERCOLATE* Laser is turned off when receiver of associated port is down **OID** 1.3.6.1.4.1.3181.10.6.1.94.11.1.3 (emConfigLossOfSignalHandling)
signal_gain	Desired signal gain in dB. **Value** String, max. 16 characters. **OID** 1.3.6.1.4.1.3181.10.6.1.94.11.1.4 (emConfigSignalGain)
max_output_power	Maximum output power permitted to exit the module. **Value** String, max. 16 characters. **OID** 1.3.6.1.4.1.3181.10.6.1.94.11.1.5 (emConfigMaxOutputPower)
low_threshold_edfa_in	This corresponds to the unamplified input signal before entering the EDFA section. Defines the lower optical signal level in dBm. A signal level below this threshold will trigger an event. **Value** String, max. 16 characters. **OID** 1.3.6.1.4.1.3181.10.6.1.94.11.1.6 (emConfigLowThresholdEdfaIn)
high_threshold_edfa_in	This corresponds to the unamplified input signal before entering the EDFA section. Defines the upper optical signal level in dBm. A signal level above this threshold will trigger an event. **Value** String, max. 16 characters. **OID** 1.3.6.1.4.1.3181.10.6.1.94.11.1.7 (emConfigHighThresholdEdfaIn)
low_threshold_port_b	Port B is the unamplified return path through the module. Defines the lower optical signal level in dBm. A signal level below this threshold will trigger an event. **Value** String, max. 16 characters. **OID** 1.3.6.1.4.1.3181.10.6.1.94.11.1.8 (emConfigLowThresholdPortB)
high_threshold_port_b	Port B is the unamplified return path through the module. Defines the upper optical signal level in dBm. A signal level above this threshold will trigger an event. **Value** String, max. 16 characters. **OID** 1.3.6.1.4.1.3181.10.6.1.94.11.1.9 (emConfigHighThresholdPortB)

©2026 MICROSENS GmbH & Co. KG - Hamm/Germany - www.microsens.com

front_panel_mode	Determines what is displayed on the front panel, when available. Also controls the modules local buttons.		
	Values	*NORMAL*	Displays module name and error conditions
		EXTENDED	Cyclical shows various system information and error conditions
		NORMAL_LOCKED	Like NORMAL but the module buttons are disabled
		EXTENDED_LOCKED	Like EXTENDED but the module buttons are disabled
		REMOTE	Display is not updated and can be controlled from remote management system
	OID	1.3.6.1.4.1.3181.10.6.1.94.11.1.10 (emConfigFrontPanelMode)	

Group	**module_control**, for all module slots[0..11]
Path	Device.MSP1000.module_control[slot]
Description	

enter_password	This command will set the module password. Only required when the nms_operation_mode is set to passive mode. Enter the password before configuration or actions can be accepted by the module.	
	Action	Excecute command with parameter string max. 16 characters.
	OID	1.3.6.1.4.1.3181.10.6.1.94.12.1.2 (moduleControlEnterPassword)
reboot_module	This command will restart the module. All communication will be disrupted! Syntax: reboot_module = CONFIRM.	
	Action	Excecute command with parameter string max. 16 characters.
	OID	1.3.6.1.4.1.3181.10.6.1.94.12.1.3 (moduleControlRebootModule)
warm_start	This command will warm start the module. Communication shall not be disrupted. (Firmware dependent) Syntax: warm_start = CONFIRM.	
	Action	Excecute command with parameter string max. 16 characters.
	OID	1.3.6.1.4.1.3181.10.6.1.94.12.1.4 (moduleControlWarmStart)
clear_counter	This command will clear all module and port related statistics counter.	
	Action	Excecute command.
	OID	1.3.6.1.4.1.3181.10.6.1.94.12.1.5 (moduleControlClearCounter)

©2026 MICROSENS GmbH & Co. KG - Hamm/Germany - www.microsens.com

switch_off_backup	For a module that supports backup and which currently is in backup condition this command will revert to normal operation. If this would disrupt traffic a warning is returned and nothing is executed. To override this warning and switch back nonetheless type switch_off_backup = CONFIRM **Action** Excecute command with parameter string max. 16 characters. **OID** 1.3.6.1.4.1.3181.10.6.1.94.12.1.6 (moduleControlSwitchOffBackup)
switch_to_backup	For a module that supports backup this command will switch to the backup link. If this would disrupt traffic because backup link is not available a warning is returned and nothing is executed. To override this warning and switch over nonetheless type switch_to_backup = CONFIRM **Action** Excecute command with parameter string max. 16 characters. **OID** 1.3.6.1.4.1.3181.10.6.1.94.12.1.7 (moduleControlSwitchToBackup)
automatic_backup	This command returns a manually overridden backup module to normal automatic mode. No parameter are required. **Action** Excecute command. **OID** 1.3.6.1.4.1.3181.10.6.1.94.12.1.8 (moduleControlAutomaticBackup)
write_display	Writes to the front panel display of the module. Only for modules that offer a front panel display. **Action** Excecute command with parameter string max. 64 characters. **OID** 1.3.6.1.4.1.3181.10.6.1.94.12.1.9 (moduleControlWriteDisplay)
led_test	This will start the modules LED test and will return the LED back up automatic mode after a few seconds. May be also be used to identify a certain module. **Action** Excecute command. **OID** 1.3.6.1.4.1.3181.10.6.1.94.12.1.10 (moduleControlLedTest)
loop_off	Turns all loops off **Action** Excecute command. **OID** 1.3.6.1.4.1.3181.10.6.1.94.12.1.11 (moduleControlLoopOff)
loop_port_1	Tries to engage a loop at port 1. Note not all modules support loops. View port status to check success. **Action** Excecute command. **OID** 1.3.6.1.4.1.3181.10.6.1.94.12.1.12 (moduleControlLoopPort1)

©2026 MICROSENS GmbH & Co. KG - Hamm/Germany - www.microsens.com

loop_port_2	Tries to engage a loop at port 2. Note not all modules support loops. View port status to check success. **Action** Excecute command. **OID** 1.3.6.1.4.1.3181.10.6.1.94.12.1.13 (moduleControlLoopPort2)
loop_port_3	Tries to engage a loop at port 3. Note not all modules support loops. View port status to check success. **Action** Excecute command. **OID** 1.3.6.1.4.1.3181.10.6.1.94.12.1.14 (moduleControlLoopPort3)
loop_port_4	Tries to engage a loop at port 4. Note not all modules support loops. View port status to check success. **Action** Excecute command. **OID** 1.3.6.1.4.1.3181.10.6.1.94.12.1.15 (moduleControlLoopPort4)
bert_restart	Resynchronizes BERT. Only has an effect if a BERT is available on the module and configured to be active. ATTENTION: Not implemented. **Action** Excecute command. **OID** 1.3.6.1.4.1.3181.10.6.1.94.12.1.16 (moduleControlBertRestart)
bert_insert_error	Inserts an error in the data pattern. This can be used to confirm that a BERT is actually operating. Only has an effect if a BERT is available on the module and configured to be active. ATTENTION: Not implemented. **Action** Excecute command. **OID** 1.3.6.1.4.1.3181.10.6.1.94.12.1.17 (moduleControlBertInsertError)
bert_clear_counter	Clears the BERT counter. Only has an effect if a BERT is available on the module and configured to be active. ATTENTION: Not implemented. **Action** Excecute command. **OID** 1.3.6.1.4.1.3181.10.6.1.94.12.1.18 (moduleControlBertClearCounter)

Group	**system_config**
Path	Device.MSP1000.system_config
Description	

©2026 MICROSENS GmbH & Co. KG - Hamm/Germany - www.microsens.com

nms_operation_mode	Read and learn in PASSIVE mode or ACTIVE mode forcing configuration upon the other modules. **Values** *PASSIVE* The NMS only listens to the bus traffic and reconfigures itself according to the current rack setting. It learns the current installation. It is also possible to write configuration via the NM module. *ACTIVE* In active mode the NMS forces its configuration upon the modules. When a module is exchanged, it is automatically reconfigured to match the defined slot configuration. Otherwise operation is similar to PASSIVE mode. **OID** 1.3.6.1.4.1.3181.10.6.1.94.1.1.2 (systemConfigNmsOperationMode)
core_mode	Use V2 unless used with an older system running in V1 mode. Only change when instructed. **Values** *V1* Legacy internal bus protocol version 1 *V2* Internal bus protocol version 2. This should be selected for new installations **OID** 1.3.6.1.4.1.3181.10.6.1.94.1.1.3 (systemConfigCoreMode)
node_id	Node Id used when NMS is used in combination with SEEmiles V5 management software. When in doubt use default node id 60000. **Value** Number in range 0-0xFFFFFFFF **OID** 1.3.6.1.4.1.3181.10.6.1.94.1.1.4 (systemConfigNodeId)
disable_legacy_access	When set network access via SEEmiles is no longer possible. **Values** enabled, disabled **OID** 1.3.6.1.4.1.3181.10.6.1.94.1.1.5 (systemConfigDisableLegacyAccess)

©2026 MICROSENS GmbH & Co. KG - Hamm/Germany - www.microsens.com

23.5 MSP1000 Status Parameters

Group	**module_inventory**, for all module slots[0..11]
Path	Device.MSP1000.module_inventory[slot]
Description	

expected_module

Name of module configured for this slot.

Value String, max. 16 characters.

OID 1.3.6.1.4.1.3181.10.6.1.94.101.1.2 (moduleInventoryExpectedModule)

module

Name of module actually discovered in this slot. This name should be equal to the above name otherwise configuration may not apply properly.

Value String, max. 16 characters.

OID 1.3.6.1.4.1.3181.10.6.1.94.101.1.3 (moduleInventoryModule)

type

General functional type of module inserted.

Values

EMPTY	No backup active or no backup supported by this module
UNKNOWN	Module is not known to the manager
TRANSPONDER	Transponder for data transfer
MEASUREMENT	Measurement or testing module
AMPLIFIER	Optical amplifier (EDFA)
MANAGEMENT	Management module
PASSIVE	Passive optical filter module
OCCUPIED	Slot covered by a double width module

OID 1.3.6.1.4.1.3181.10.6.1.94.101.1.4 (moduleInventoryType)

board_code

Internal code of actually inserted module.

Value Number in range 0-255

OID 1.3.6.1.4.1.3181.10.6.1.94.101.1.5 (moduleInventoryBoardCode)

additional_info

Additional information that may be saved in some modules during production.

Value String, max. 32 characters.

OID 1.3.6.1.4.1.3181.10.6.1.94.101.1.6 (moduleInventoryAdditionalInfo)

©2026 MICROSENS GmbH & Co. KG - Hamm/Germany - www.microsens.com

serial_number	Serial number as stored within the hardware. **Value** String, max. 16 characters. **OID** 1.3.6.1.4.1.3181.10.6.1.94.101.1.7 (moduleInventorySerialNumber)
occupied_slots	Number of slots taken by this module. Usually 1. **Value** Number in range 0-0xFFFFFFFF **OID** 1.3.6.1.4.1.3181.10.6.1.94.101.1.8 (moduleInventoryOccupiedSlots)
project_number	Internal hardware project number **Value** String, max. 8 characters. **OID** 1.3.6.1.4.1.3181.10.6.1.94.101.1.9 (moduleInventoryProjectNumber)
build_version	Precise build code for hardware version tracking. **Value** String, max. 16 characters. **OID** 1.3.6.1.4.1.3181.10.6.1.94.101.1.10 (moduleInventoryBuildVersion)
production_date	Production data of the module **Value** String, max. 16 characters. **OID** 1.3.6.1.4.1.3181.10.6.1.94.101.1.11 (moduleInventoryProductionDate)
mfg_test_info	Internal information for quality management. Manufacturing Site / Test Site / Test Person **Value** String, max. 16 characters. **OID** 1.3.6.1.4.1.3181.10.6.1.94.101.1.12 (moduleInventoryMfgTestInfo)
number_of_optical_ports	Indicates the number of actively monitored optical ports of this type of module. **Value** Number in range 0-255 **OID** 1.3.6.1.4.1.3181.10.6.1.94.101.1.13 (moduleInventoryNumberOfOpticalPorts)
number_of_sfp_ports	Indicates the number of optical SFP or SFP+ ports of this type of module. **Value** Number in range 0-255 **OID** 1.3.6.1.4.1.3181.10.6.1.94.101.1.14 (moduleInventoryNumberOfSfpPorts)
number_of_xfp_ports	Indicates the number of optical XFP ports of this type of module. **Value** Number in range 0-255 **OID** 1.3.6.1.4.1.3181.10.6.1.94.101.1.15 (moduleInventoryNumberOfXfpPorts)

©2026 MICROSENS GmbH & Co. KG - Hamm/Germany - www.microsens.com

core_firmware_version	Core operating system software version. **Value** String, max. 24 characters. **OID** 1.3.6.1.4.1.3181.10.6.1.94.101.1.16 (moduleInventoryCoreFirmwareVersion)
core_firmware_date	Core operating system software creation date. **Value** String, max. 16 characters. **OID** 1.3.6.1.4.1.3181.10.6.1.94.101.1.17 (moduleInventoryCoreFirmwareDate)
appl_firmware_version	Application software version. **Value** String, max. 24 characters. **OID** 1.3.6.1.4.1.3181.10.6.1.94.101.1.18 (moduleInventoryApplFirmwareVersion)
appl_firmware_date	Application software creation date. **Value** String, max. 16 characters. **OID** 1.3.6.1.4.1.3181.10.6.1.94.101.1.19 (moduleInventoryApplFirmwareDate)

Group	**module_status**, for all module slots[0..11]
Path	Device.MSP1000.module_status[slot]
Description	This table holds a record for each module in the system. Note that not all modules deliver every kind of status.
module	Name of module actually discovered in this slot. **Value** String, max. 16 characters. **OID** 1.3.6.1.4.1.3181.10.6.1.94.102.1.2 (moduleStatusModule)
system_ok	True when the module has booted and appears ok. **Values** true, false **OID** 1.3.6.1.4.1.3181.10.6.1.94.102.1.3 (moduleStatusSystemOk)
error_condition	True when any error condition is currently present. **Values** true, false **OID** 1.3.6.1.4.1.3181.10.6.1.94.102.1.4 (moduleStatusErrorCondition)

©2026 MICROSENS GmbH & Co. KG - Hamm/Germany - www.microsens.com

test_mode	True when module is in loopback test or a backup is engaged.		
	Values	true, false	
	OID	1.3.6.1.4.1.3181.10.6.1.94.102.1.5 (moduleStatusTestMode)	
spare_part	True when module is marked as spare part.		
	Values	true, false	
	OID	1.3.6.1.4.1.3181.10.6.1.94.102.1.6 (moduleStatusSparePart)	
uptime	Uptime since last reboot in seconds.		
	Value	PERIOD0-0xFFFFFFFF	
	OID	1.3.6.1.4.1.3181.10.6.1.94.102.1.7 (moduleStatusUptime)	
time_since_counter_reset	How long ago have the statistics counter been restarted.		
	Value	PERIOD0-0xFFFFFFFF	
	OID	1.3.6.1.4.1.3181.10.6.1.94.102.1.8 (moduleStatusTimeSinceCounterReset)	
temperature	Temperature value in centigrade.		
	Value	Number in range 0-255	
	OID	1.3.6.1.4.1.3181.10.6.1.94.102.1.9 (moduleStatusTemperature)	
too_hot	True when module is running too hot.		
	Values	true, false	
	OID	1.3.6.1.4.1.3181.10.6.1.94.102.1.10 (moduleStatusTooHot)	
backup_state	Indicates if a backup is active and in which state.		
	Values	*NONE*	No backup active or no backup supported by this module
		DISRUPTED	Both links are down and communication is disrupted
		BACKUP	Backup is engaged and working
		AWAIT_SWITCHBACK	Backup condition is finished but the backup is still active due to hold time
		MANUAL	Backup was switches manually by operator
	OID	1.3.6.1.4.1.3181.10.6.1.94.102.1.11 (moduleStatusBackupState)	
backup_counter	Counts the number of times this module has initiated a backup (if backup feature is available for this module type).		
	Value	Number in range 0-0xFFFFFFFF	
	OID	1.3.6.1.4.1.3181.10.6.1.94.102.1.12 (moduleStatusBackupCounter)	

©2026 MICROSENS GmbH & Co. KG - Hamm/Germany - www.microsens.com

backup_duration	How long the backup has been activated in total since last value reset. **Value** PERIOD0-0xFFFFFFFF **OID** 1.3.6.1.4.1.3181.10.6.1.94.102.1.13 (moduleStatusBackupDuration)

Group	**em_status**, for all module slots[0..11]
Path	Device.MSP1000.em_status[slot]
Description	Optical amplifier status

system_ok	True when no errors are present **Values** true, false **OID** 1.3.6.1.4.1.3181.10.6.1.94.104.1.2 (emStatusSystemOk)

errors

Indicates various optical error conditions.

Values

OK	No other errors present
LOSS_OF_INPUT	Input signal missing. Nothing to amplify
LOSS_OF_OUTPUT	Output power dropped due to other error
TOO_HOT	The pump laser is running too hot
EYE_SAFETY_SHUTDOWN	Laser pump disabled to protect eyes
BACK_REFLECTION	Back reflection may be caused by a bad cable on the output side (Port B)
POWER_LIMIT	Output power limit reached
OVER_CURRENT	Too much electrical power is consumed
PUMP_DOWN	The pump laser is disabled due to other error

OID 1.3.6.1.4.1.3181.10.6.1.94.104.1.3 (emStatusErrors)

hardware_code	Details codes about the installed hardware components. **Value** String, max. 32 characters. **OID** 1.3.6.1.4.1.3181.10.6.1.94.104.1.4 (emStatusHardwareCode)
time_since_power_error	How long ago since the last time the output power was in error condition. **Value** PERIOD0-0xFFFFFFFF **OID** 1.3.6.1.4.1.3181.10.6.1.94.104.1.5 (emStatusTimeSincePowerError)

©2026 MICROSENS GmbH & Co. KG - Hamm/Germany - www.microsens.com

time_with_power_loss	Accumulated time the output power has been down. **Value** PERIOD0-0xFFFFFFFF **OID** 1.3.6.1.4.1.3181.10.6.1.94.104.1.6 (emStatusTimeWithPowerLoss)
input_signal_low_counter	Number of times a loss of signal has occurred. **Value** Number in range 0-0xFFFFFFFF **OID** 1.3.6.1.4.1.3181.10.6.1.94.104.1.7 (emStatusInputSignalLowCounter)
input_power	Optical input power of port A. **Value** String, max. 16 characters. **OID** 1.3.6.1.4.1.3181.10.6.1.94.104.1.8 (emStatusInputPower)
signal_gain	Indicates how strong the input signal is amplified. **Value** String, max. 16 characters. **OID** 1.3.6.1.4.1.3181.10.6.1.94.104.1.9 (emStatusSignalGain)
optimal_flat_gain	Indicates the best gain setting for an even amplification across the wavelength channels **Value** String, max. 16 characters. **OID** 1.3.6.1.4.1.3181.10.6.1.94.104.1.10 (emStatusOptimalFlatGain)
back_reflection	The value should be low and indicates cable issues if not. **Value** String, max. 16 characters. **OID** 1.3.6.1.4.1.3181.10.6.1.94.104.1.11 (emStatusBackReflection)
signal_output_power	Indicated the actually achieved optical signal output power. **Value** String, max. 16 characters. **OID** 1.3.6.1.4.1.3181.10.6.1.94.104.1.12 (emStatusSignalOutputPower)
total_output_power	Indicated the actually achieved optical output power leaving the module (including noise). **Value** String, max. 16 characters. **OID** 1.3.6.1.4.1.3181.10.6.1.94.104.1.13 (emStatusTotalOutputPower)
min_output_power	Indicates the minimum optical output level that must be send out **Value** String, max. 16 characters. **OID** 1.3.6.1.4.1.3181.10.6.1.94.104.1.14 (emStatusMinOutputPower)
max_output_power	Indicates the maximum optical output level that can be send out **Value** String, max. 16 characters. **OID** 1.3.6.1.4.1.3181.10.6.1.94.104.1.15 (emStatusMaxOutputPower)

©2026 MICROSENS GmbH & Co. KG - Hamm/Germany - www.microsens.com

cfg_output_power	Indicated the desired configured optical output power **Value** String, max. 16 characters. **OID** 1.3.6.1.4.1.3181.10.6.1.94.104.1.16 (emStatusCfgOutputPower)

Group	**bert_status**, for all module slots[0..11]
Path	Device.MSP1000.bert_status[slot]
Description	Displays the results of the bit error rate tester (BERT) if it is present and enabled in a slot

location	Textual description of BERT port location. **Value** String, max. 16 characters. **OID** 1.3.6.1.4.1.3181.10.6.1.94.105.1.2 (bertStatusLocation)
bert_operation	Indicates the general bit error rate tester operational status. **Values** *UNUSED* BERT is not enabled or not present in this module *IN_SYNC* BERT has synchronized. Test data can be transferred. *WAS_OUT_OF_SYNC* BERT is now synchronized, but was out of sync of some time after that last BERT restart or clear error command. *OUT_OF_SYNC* BERT is out of sync. No data transfer is possible. **OID** 1.3.6.1.4.1.3181.10.6.1.94.105.1.3 (bertStatusBertOperation)
total_errors	Number of errored bits. Only valid when BERT is synchronized. **Value** Number in range 0-0xFFFFFFFF **OID** 1.3.6.1.4.1.3181.10.6.1.94.105.1.4 (bertStatusTotalErrors)
time_since_last_error	Seconds elapsed since the last error was detected. **Value** PERIOD0-0xFFFFFFFF **OID** 1.3.6.1.4.1.3181.10.6.1.94.105.1.5 (bertStatusTimeSinceLastError)
total_test_time	Accumulated time how long the test was run since last value clear. **Value** PERIOD0-0xFFFFFFFF **OID** 1.3.6.1.4.1.3181.10.6.1.94.105.1.6 (bertStatusTotalTestTime)
errored_time	Accumulated seconds in which at least on errored bit was detected. **Value** PERIOD0-0xFFFFFFFF **OID** 1.3.6.1.4.1.3181.10.6.1.94.105.1.7 (bertStatusErroredTime)

©2026 MICROSENS GmbH & Co. KG - Hamm/Germany - www.microsens.com

bit_error_rate	Averaged bit error rate during test interval. **Value** String, max. 16 characters. **OID** 1.3.6.1.4.1.3181.10.6.1.94.105.1.8 (bertStatusBitErrorRate)
ber_since_last_error	Bit error rate since last error. **Value** String, max. 16 characters. **OID** 1.3.6.1.4.1.3181.10.6.1.94.105.1.9 (bertStatusBerSinceLastError)
theoretical_ber	Theoretical best possible error rate in the given time frame of the current test interval. **Value** String, max. 16 characters. **OID** 1.3.6.1.4.1.3181.10.6.1.94.105.1.10 (bertStatusTheoreticalBer)
availability	Relation of transmitted vs. Errored bits. **Value** String, max. 16 characters. **OID** 1.3.6.1.4.1.3181.10.6.1.94.105.1.11 (bertStatusAvailability)

Group	**system_status**
Path	Device.MSP1000.system_status
Description	
any_error_condition	True when any error condition is currently present in any module. **Values** true, false **OID** 1.3.6.1.4.1.3181.10.6.1.94.100.1.2 (systemStatusAnyErrorCondition)
any_test_mode	True when any module is in loopback test or has a backup engaged. **Values** true, false **OID** 1.3.6.1.4.1.3181.10.6.1.94.100.1.3 (systemStatusAnyTestMode)
any_spare_part	True when any module is marked as spare part. **Values** true, false **OID** 1.3.6.1.4.1.3181.10.6.1.94.100.1.4 (systemStatusAnySparePart)
used_node_id	Actually used node id as discovered from device **Value** Number in range 0-0xFFFFFFFF **OID** 1.3.6.1.4.1.3181.10.6.1.94.100.1.5 (systemStatusUsedNodeId)

©2026 MICROSENS GmbH & Co. KG - Hamm/Germany - www.microsens.com

local_rack	Indicates in which rack the management module over which this information is retrieved is inserted. **Value** Number in range 0-0xFFFFFFFF **OID** 1.3.6.1.4.1.3181.10.6.1.94.100.1.6 (systemStatusLocalRack)
local_slot	Indicates in which slot the management module over which this information is retrieved is inserted. **Value** Number in range 0-0xFFFFFFFF **OID** 1.3.6.1.4.1.3181.10.6.1.94.100.1.7 (systemStatusLocalSlot)

©2026 MICROSENS GmbH & Co. KG - Hamm/Germany - www.microsens.com

24 SmartOffice

24.1 Key Features

General Features

SmartOffice is complete room automation system designed to measure and control office environment. This includes lighting, temperature, outlets, blinds, air condition and other facilities. Sensor and actors from MICROSENS or various third parties can be combined for a customized decentralized solutiuon. Such rooms can in turn be managed centrally from a Building Mangement System.

A SmartOffice solution can be introduced room-by-room to upgrade existing installations. Automated rooms converse energy save costs by turning down when not in use.

PoE based LED Lighting

LED panels replace traditional neon tubes. The MICROSENS SmartLightController acts as an intelligent power supply that converts PoE energy to dimmable LED complatible power.

The LED panels can be dimmed and some panel type offer tunable color of light as well

Room Sensors

The MICROSENS SmartLightController includes sensors to detect ambient temperature, brightness, motion. These sensor data act as inputs to the room automation.

Small, non intrusive sensor at the ceiling.

Automatic Room

A SmartOffice can operate fully automated, based on motion and time. After a programmable idle time the room is shut down. What exactly shuts down, and what not can be configured.

No need to for manual intervention. No one can forget to turn off lights or projector after a meeting is finished.

Configurable Graphical User Interface

A SmartOffice can also be operated very conviently via a tablet or mobile phone. The graphical user interface (GUI) is fully configurable and customizable to meet any customer requirements.

GUI will autosize and adapt to any display device. When several GUI are used in parallel they will all synchronize.

Scene Based

All actions are grouped in scenes. A scene may affect every as little or as much of the parameter as desired. A scene can be global, room specific or even remotely accessed (if enabled) to be engaged from a third party.

A streamlined logical design eases cutomization and operation.

Hardware Buttons

A SmartOffice can interface to many types of physical switches. Any switch can be mapped to any scene.

Some poeple prefer traditional switches to control or override automatic functions.

©2026 MICROSENS GmbH & Co. KG - Hamm/Germany - www.microsens.com

Scripting Language

A key feature of the SmartOffice solution is the powerful scripting engine. The script incorporates the decision logic as what to do based on sensor input. Most scripts are preinstalled during installation of the SmartDirector App, but additional custom scripts may be added to perform a wide range of features such as SNMP, HTTP or FTP operations, special office functions, etc.

Scripts may be used used to enhance scene functionality beyound the normal scope of room control.

SmartDirector App

The SmartOffice framework offers great flexibility. In fact so much that it is sensible to offer a default functionality and graphical user interface. This interface is created by installation the SmartDirector App. For special applications, other variations of the App can be created, without affecting the general firmware of the underlying switch.

The SmartDirector App creates the visual interface that normal Office user will see. It also comes with a set of configuration parameter to ease inital deployoment.

microPLC

SmartOffice comes with software script controlled PLC (programmable Logic controller) function that permits PID regulators and other typical PLC applications. The microPLC does not support IEC programming but instead relies on microScript. PLC and event based operation may coexist to offer the best programming interface for any office and building automation task at hand.

The combination of event and timing controlled program execution offers the optimal platform for any given task in building automation.

Remote Control Interface

A SmartOffice comes with a local graphical interface. To operate the system remotely it possible to simulate operation via an HTTPS REST API interface. When enabled, for each element indiviually, it is possile to expose a well defined set of functions, which can be controlled. Likewise,it is possible to read information from the system.

A building manager that wants to turn off all lights in the buidling at the push of a button, could utilize this interfaace to accomplish the task, without the need to know any details about the individual rooms.

enOcean support

SmartOffice support wireless automation devices using the enOcean protocol. This includes switches, relays to switch outlets, blinds and some sensors. Energy consumption monitoring is available.

A key featureof enOcean is the fact the physical switches require no battery. Energy is harvested from piezo crystal during mechanical switch movement.

Homematic support

SmartOffice support wireless automation devices using the Homematic protocol. This includes switches, relays to switch outlets temperature control and other devices.

These wireless devices combine low cost with good functionality.

Modbus/RTU support

Modbus is a standard automation bus. SmartOffice supports local serial wiring to Modbus enabled devices. Custom scripts are required for integration as there is no standard on how to interpret the data.

Interface to older style automation systems.

©2026 MICROSENS GmbH & Co. KG - Hamm/Germany - www.microsens.com

Modbus/IP support

Modbus/IP is a standard automation protocol user over IP. Configurable mapping of any Modbus coil, register or memory cell to a named and data typed SmartOffice sensor or actor data point. This way Modbus devices can seamlessly be integrated into a SmartOffice installation.

Seamlessly integrate older style automation systems.

IP500 support

IP500 is an upcoming wireless automation protocol. It provides improved reliability by utilizing 866 Mhz as well as 2.4Ghz frequencies in parallel. Depending on used device, an external gateway is required which includes the required wireless hardware.

Secure and reliable wireless IOT interface.

BACnet/IP support

BACnet is an established build infrastructure interface. The device creates a BACnet server which can be read and written from other devices. The values can be linked to named and data typed SmartOffice sensor or actor data points. This way BACnet devices can seamlessly be integrated into a SmartOffice installation.We can map BACnet objects to the internal generalized database and monitor or set BACnet variables. Since such application are very installation specific, custom scripting is required for integration.

BACnet is often used in HVAC applications.

NEURON-LINK-2 support

Supports MICROSENS NEURON-LINK-2 enabled sensors with automated configuration and advanced sensing features.

This sensor generation permits advanced feature like asset tracking or grid matrix temperature sensing. A key feature is that new features can be simply be added in a sensor without the need to upgrade the system software.

24.2 Functional Description

SmartOffice

SmartOffice setup and status parameters.

©2026 MICROSENS GmbH & Co. KG - Hamm/Germany - www.microsens.com

24.3 SmartOffice CLI Command Reference

The following table lists all CLI commands applicable for this feature section. For each parameter, the access mode is given:

R = Read Only, R/W = Read/Write, X = Executable Action.

Please note that the effective access rights are dependent on the login level of the user.

Category	Group	Table	Parameter	Options	Access	Description
Device.						
	smartoffice.					Smart light and office control
			enable_smart_office		R/W	Generally enable the SmartOffice solution.
		director_config.				General configuration of the director.
			domain_name		R/W	
			general_mode		R/W	
			act_on_ungrouped_sensors		R/W	When set any sensor attributes which are not configured to be part of a sensor group, will also trigger the regular script execution. This may be selected in smaller setups to save the effort of defining groups. Note that no event rate limiting can be applied to ungrouped sensors and thus using this mode can result in overloading the system leading to sluggish response times.
			scan_filter		R/W	The scan filter may be used to limit the displayed output when applying the scan_light_controllers action.
			scan_light_controllers		X	Scan the local network for reachable SmartLightController and display a list. The scan_filter parameter is applied.
		device_config[DYNAMIC].				Defines the configuration of each device under control. A device may contain one or more actor or sensor functions.
			device_name		R/W	Unique group name referenced by the director. Important: For some devices further configuration options are available in the section Device.Controller. The name defined here must be identical to a name defined there to match the configuration options.
			location		R/W	Free text to describe the position of the controller on the premises. This value need NOT be saved within the sensor itself.
			latitude		R/W	A value in degrees such as: 50.123
			longitude		R/W	A value in degrees such as: 8.875
			altitude		R/W	A value in meters.
			placement		R/W	Information where to find the device
			product_type		R/W	The product type is used by the system to select the network protocol required to access the device. Note that for some devices a further configuration section exists under the Device.Controller section. Such additional config exists for type SMARTLIGHT_CONTROLLER and SMART_IO_CONTROLLER.

©2026 MICROSENS GmbH & Co. KG - Hamm/Germany - www.microsens.com

sparepart_mode	R/W	When enabled, the module entry is ignored and its status is not evaluated. This way entries or devices can be parked. A possible failure of the device is not indicated. May be used to temporarily disabled devices but without the need to remove them from the configuration.
device_id	R/W	Unique manufacturer dependent identifier of the device. For SmartLightController the MAC address of the controller is entered here.
network_address	R/W	May be an IP or other type of address depending on the given network access method. Can be left blank for a SmartLightController.
additional_parameter	R/W	Comma separated list of any parameter specific for this device. Example: panel=type A,refresh_rate=12
network_failure_action	R/W	Defines what the actor does if the network connection fails or after reboot until communication is established.
identify	X	The actor will blink with its status led to signal its presence and physical location. Supply instance or 0 or nothing for all instances.
restart	X	Restart the device.
calibrate	X	Start device specific calibration process if available. Can be used to calibrate the output power of LED driver for SLC types. Use keyword radar to calibrate a radar sensor connected to an SLC.
pair	X	Start pairing process that couples individual device to this director.
unpair	X	Discard existing pairing between an individual device and this director.
update_firmware	X	Update the device firmware. When no file name is supplied, the latest version is automatically selected. Alternatively, a specific file name can be supplied to use another version. Use Management.files.firmware.display_files to view a list of available files under the SLC section. (applies to SmartLight Controllers)
test	X	Enable test mode.Without parameter will run a brief device dependent test. There may be specific parameter to facilitate quality assurance tests. Usually, not for customer operation.
actor_group_config[DYNAMIC].		Defines a group of actors that support the same attribute and which shall be set together to the same value.
group_name	R/W	Unique group name referenced by the director
attribute	R/W	The attribute which is configured. Locally, identical attributes of the associated devices listed below are grouped.
associated_devices	R/W	List of all actors that supply information to a particular group. When an instance is used, here the syntax devicename.instance is used. Alternatively, a colon separator may be used instead of the dot. All records are comma separated. Instance ranges may be used: DEV.(1-4,12) This selects instances 1,2,3,4,12 from device DEV.
additional_parameter	R/W	Comma separated list of any parameter specific for this attribute if needed.

©2026 MICROSENS GmbH & Co. KG - Hamm/Germany - www.microsens.com

default_value	R/W	Defines the default value which is written to the actors upon system start until another value is written. When empty the value of 0 is used.
value_caching	R/W	When enabled the group target value is saved to local non volatile memory. Should the director restart, the cached values will be restored and send to the devices. This feature is useful to ensure uninterrupted operation even in the event of a system failure or to restore conditions after a power outage.
additional_script_name	R/W	When the actor group is updated, an additional script, defined here, can be executed to run time consuming functions outside of the standard processing loop. Usually, this field is left empty.
manual_set_value	X	This command permits setting of the group value manually bypassing the defined script logic. This is intended for testing only. Important: This manual setting always acts on priority level 8. Important: manual override will continue until manually released by setting ..manual_set_value = (type enter without a value).
sensor_group_config[DYNAMIC].		Defines a group of sensors that support the same attribute and whose data should be interpreted together.
group_name	R/W	Unique group name referenced by the director
attribute	R/W	The attribute which is configured. Locally, identical attributes of the associated devices listed below are grouped.
associated_devices	R/W	List of all sensors that supply information to a particular group. When an instance is used, here the syntax devicename.instance is used. Alternatively, a colon separator may be used instead of the dot. All records are comma separated. Instance ranges may be used: DEV.(1-4,12) This selects instances 1,2,3,4,12 from device DEV.
unit	R/W	When defined, the received values will be tagged with this unit. In most cases the unit is already supplied by the sensor. Use this field when (some) associated sensors do not supply the expected unit string. Can be left empty in most cases.
decimal_places	R/W	This parameter is used to define the number of decimal places behind the comma for decimal numbers. It has no effect on textual group values.
value_caching	R/W	This feature is not currently implemented.
run_script_when	R/W	Defines how much the sensor group status needs to change in order to trigger the run of a script (and the optional additional_script). This also triggers MQTT and MODBUS activity. These protocols trigger at the same condition as the scripts when configured to send out sensor group changes. (The script names may be left empty if only MQTT is required for example). The parameter can be used to limit the number of script runs by not following little changes that lead to no effect. This filter is logically behind the sensor specific limits defined elsewhere is this table. When the sensor filter is setup well, then this filter here can be relaxed.

©2026 MICROSENS GmbH & Co. KG - Hamm/Germany - www.microsens.com

run_script_delta	R/W	Defines how much the value can deviate before a value change is reported automatically. Depending on the setting of the report_mode an absolute or a percent value is expected.
run_script_idle_time	R/W	When unequal to 0, the script and possible MQTT, MODBUS output are executed after the specified value in seconds. The time is restarted whenever the script is executed for whatever reason. This feature is useful to guarantee that a group update is executed even if the reported data never change.
script_name	R/W	When the group is updated and the required conditions are met, the script specified in this parameter is executed. If the parameter is left blank, the standard MS_SmartOfficeControl.ms script is executed. The specified script should not contain any time consuming functions. Syntax: = appname/filename:subroutine The appname and subroutine name are optional. Without appname, the script must be located in xml_cli_scripts folder.
additional_script_name	R/W	When the group is updated and the required conditions are met and a script is defined here, this script is executed in the background after the standard processing for this group has taken place. An additional script, defined here, can be used to run time consuming functions outside of the standard processing loop. Usually, this field is left empty.
report_mode	R/W	This and the following six parameters act directly in the sensor device driver with the aim to minimize incoming traffic into the system right at the source. The report_mode acts in combination with the update_delta. Do not confuse these parameters with the run_script_.. parameter which act later in the processing chain after the sensor data are received.
additional_parameter	R/W	Optional, comma separated list of any parameter specific for the sensor (driver) that supports this attribute. Usually empty.
value_lifetime	R/W	Defines after how many seconds the current group value is considered too old when no further update is received. Any value update via an associated sensor retriggers this timer. If the timer expires the group state changes to TIMEOUT. A value of 0 disables the aging feature.
lower_boundary	R/W	When the measured value of any individual sensor is equal or below this value the sensor_list status is set to LOWER_LIMIT. The value is configured with a numerical value optionally followed by a unit. To eliminate superflous events caused by slight variations of the sensor value, a hysteresis can be specified. The value will then return back to OK, only when the value rises again above the boundary + hysteresis. Syntax: boundary, hysteresis. Example: 12000mW,500mW. The unit is optional and the value must be in the same unit as the reported value.

©2026 MICROSENS GmbH & Co. KG - Hamm/Germany - www.microsens.com

	upper_boundary	R/W	When the measured value of any individual sensor is equal or above this value the sensor_list status is set to UPPER_LIMIT. The value is configured with a numerical value optionally followed by a unit. To eliminate superflous events caused by slight variations of the sensor value, a hysteresis can be specified. The value will then return back to OK, only when the value decreases again below the boundary - hysteresis. Syntax: boundary, hysteresis. Example: 19.5C,1.5C
	boundary_hysteresis	R/W	How much the value must return within bounds before the alarm condition is cleared. This value is no longer used as the hysteresis is now specified as second value of the boundary parameter.
	update_delta	R/W	Defines how much the value can deviate before a value change is reported automatically. Depending on the setting of the report_mode an absolute or a percent value is expected. This value is used by sensor driver and limits inbound sensor traffic.
	rate_limit	R/W	Defines how quickly the value is reported. Defined in units of 100ms. 0 means no rate limiting. This value is used by sensor driver and limits inbound sensor traffic.
	report_idle_time	R/W	Defines how often the value is reported at least, even if no changes have occured. Defined in seconds. 0 means no automatic reporting. This parameter may be used to ensure data are present even when never changing. The timer is restarted when a value is reported due to other reason.
	clear_values	X	Clear status values for minimum_peak_hold and maximum_peak_hold of the associated sensor_group_status.
device_information[128].			Summarizes the most important inventory information of each detected device.
	name	R	Unique name for reference. This is name of the base device.
	hardware_id	R	A product specific hardware identification. May for example contain the MAC address.
	device_type	R	Indicates if this is an actor or sensor device.
	operational_state	R	Indicates the operational state of the device. Device (not attribute) specific errors will be indicated here.
	actor_attributes	R	Lists which settable actor attributes are provided by this device.
	sensor_attributes	R	Lists which readable sensor attributes are provided by this device.
	vendor_name	R	Vendor or manufacturer name of the device.
	article_number	R	This device article number.
	serial_number	R	This device serial number.
	hardware_revision	R	This device hardware version.
	software_version	R	This device software / firmware version.
	additional_info	R	Optional comma separated list of status fields specific for this type of device.
device_status[128].			Summarizes the most important status information of each detected device.

©2026 MICROSENS GmbH & Co. KG - Hamm/Germany - www.microsens.com

	name	R	Unique name for reference. This is name of the base device.
	temperature	R	Temperature value in centigrade. When several thermometers exist, the most severe value is shown. When no thermometer exists, 0 is displayed and climate_level indicates UNUSED.
	climate_level	R	Annotated temperature level.
	power_supply_status	R	Displays state of power supply.
	fan_status	R	Displays state of cooling fan. Indicates UNUSED in fanless devices.
	last_reset_reason	R	Indicates the reason for the last device restart if available.
	reset_counter	R	Counts repetitive resets as supplied from device.
	last_update	R	Indicates the time when this record was last updated.
device_unassigned[16].			Collects devices that try to to connect but are not configured in the system (yet)
	device_id	R	Contains the device id or MAC of the found assigned product
	device_name	R	The device type or product name
	network_type	R	Indictates the product type or network protocol
	last_update_time	R	Indicates the time when the device was found.
actor_list[512].			This table lists all currently registered actors with all their attributes.
	device	R	This is name of the base device which controls this actor. There may be several actor types (attributes) in the same device and these share the same name but use different attributes. There may also be several similar actor attributes. These are differentiated with the instance parameter.
	instance	R	Describes a unique instance when several similar functional attributes are existing in the same device
	attribute	R	The kind of function this actor is acting on
	associated_groups	R	Indicates in which actor_groups this actor takes part.
	value	R	The currently set value as text string followed by the unit such as mA or Lux.
	actor_state	R	Indicates whether the indicated value was successfully written to the actual device.
	creator	R	Indicates which subsystem created the actor entry.
	last_update	R	Indicates the time when this record was last updated.
sensor_list[512].			This table lists all currently registered sensors with all their attributes.
	device	R	This is name of the base device which controls this sensor. There may be several different sensor types (attributes) in the same device. These share the same name but use different attributes. There may also be several similar sensors in the device. These are differentiated with the instance parameter.
	instance	R	Describes a unique instance when several similar functional attributes are existing in the same device

©2026 MICROSENS GmbH & Co. KG - Hamm/Germany - www.microsens.com

	attribute	R	The kind of measurement this sensor is reporting.
	associated_groups	R	Indicates in which sensor_groups this sensor takes part.
	value	R	The last reported value as text string followed by the unit such as mA or Lux.
	sensor_state	R	Indicates particular sensor states such hitting a boundary.
	creator	R	Indicates which subsystem created the sensor entry.
	last_update	R	Indicates the time when this record was last updated.
gui_list[512].			This table lists all currently registered gui elements with all their attributes.
	device	R	This is name of the gui element. There may be several different attributes in the same element.
	instance	R	Describes a unique instance when several similar functional attributes are existing in the same gui element.
	attribute	R	The kind of element this gui element is reporting.
	value	R	The last reported value as text string followed by the unit such as mA or Lux.
	sensor_state	R	Indicates particular sensor states such hitting a boundary.
	creator	R	Indicates which subsystem created the sensor entry.
	last_update	R	Indicates the time when this record was last updated.
actor_group_status[128].			Calculated status of the defined actor groups. The listed value reflects the value all associated actors should use. The values update when an actor group is set by a script or manually.
	group_name	R	This is name mirrors the actor_group_configuration.
	attribute	R	The name of the controlled attribute.
	num_assigned_actors	R	Number of actors that are configured for this group.
	num_failed_actors	R	Number of actors that have not responded as expected.
	group_state	R	
	value	R	This value is set by the decision logic. May contain simple on,OFF or for example a sound file name
	active_priority	R	Indicates which priority level is currently controlling the group value. Lower values have higher priority.
	priority_value_chain	R	Displays the priority=value pairs of all currently defined priority levels. Relinquished priorities are not shown.
	last_update	R	Indicates the time when this group status was last updated.
sensor_group_status[128].			Calculated status for all sensor groups. The sensor values of all contributing sensors are used to calculate min, max and average values. The values update each time a sensor reports changes.

©2026 MICROSENS GmbH & Co. KG - Hamm/Germany - www.microsens.com

group_name	R	This is name mirrors the sensor_group_configuration.
attribute	R	The name of the attribute measured. E.g. brightness, motion, switch.
num_assigned_sensors	R	Number of sensors that are configured for this group.
num_failed_sensors	R	Number of sensors that have not responded as expected.
group_state	R	Informs when not all sensors operate as expected.
minimum_peak_hold	R	Minimum value ever reported in this group since last value clear.
minimum_value	R	Minimum value out of all sensors that report to this group.
average_value	R	Average value out of all sensors that report to this group. Uses the number of reporting sensors to calculate the average. This field holds the group value when the group contains textual data.
maximum_value	R	Maximum value out of all sensors that report to this group.
maximum_peak_hold	R	Maximum value ever reported in this group since last value clear.
total_value	R	The total sum of all individual sensor values in this group.
lower_boundary_reached	R	Number of sensors that have reached their lower threshold. A value of 0 means no sensor has reached a lower boundary.
upper_boundary_reached	R	Number of sensors that have reached their upper threshold. A value of 0 means no sensor has reached an upper boundary.
updating_sensor_index	R	Indicates the index to the sensor_list which has caused the latest group update.
last_update	R	Indicates the time when this group status was last updated.
health_report.		
any_errors	R	The sum of any error as indicated in this table
any_warnings	R	The sum of any warnings as indicated in this table
last_update_time	R	Indicates the time when the status value were last updated
devices_defined	R	The total number of devices configured via smart_office.device_config
devices_not_ready	R	The number of configured devices that are not in NORMAL or SPAREPART state
sparepart_devices	R	The number of configured devices that are in SPAREPART state
sensor_groups_defined	R	The number of smart_office.sensor_group_config entries defined
sensor_group_warnings	R	The number of smart_office.sensor_group_status entries which are not OK but also not failed. A special condition exists
sensor_group_errors	R	The number of smart_office.sensor_group_status entries which are in FAILED condition or have a failed associated device

©2026 MICROSENS GmbH & Co. KG - Hamm/Germany - www.microsens.com

sensor_groups_no_devs	R	The number of smart_office.sensor_groups for which no device is configured or the expected device has not registered.
sensor_attrs_registered	R	The number of sensor attributes that have been registered
sensor_attr_warnings	R	The number of sensor attributes that are not OK but also not failed. A special condition or a timeout exists
sensor_attr_errors	R	The number of sensor attributes that are in FAILED condition
actor_groups_defined	R	The number of smart_office.actor_group_config entries defined
actor_group_warnings	R	The number of smart_office.actor_group_status entries which are not OK but also not failed. A special condition exists
actor_group_errors	R	The number of smart_office.actor_group_status entries which are in FAILED condition or have a failed associated device
actor_groups_no_devs	R	The number of smart_office.actor_groups for which no device is configured or the expected device has not registered.
actor_attrs_registered	R	The number of actor attributes that have been registered
actor_attr_warnings	R	The number of actor attributes that are not OK but also not failed. A special condition exists
actor_attr_errors	R	The number of actor attributes that are in FAILED condition

©2026 MICROSENS GmbH & Co. KG - Hamm/Germany - www.microsens.com

24.4 SmartOffice Configuration Parameters

Group	**General Parameters**
Path	Device.SmartOffice
enable_smart_office	Generally enable the SmartOffice solution. **Values** enabled, disabled **OID** 1.3.6.1.4.1.3181.10.6.1.99.1 (smartofficeEnableSmartOffice)

Group	**device_config**, dynamical size
Path	Device.SmartOffice.device_config
Description	Defines the configuration of each device under control. A device may contain one or more actor or sensor functions.
device_name	Unique group name referenced by the director. Important: For some devices further configuration options are available in the section Device.Controller. The name defined here must be identical to a name defined there to match the configuration options. **Value** String, max. 31 characters. **OID** 1.3.6.1.4.1.3181.10.6.1.99.3.1.2 (deviceConfigDeviceName)
location	Free text to describe the position of the controller on the premises. This value need NOT be saved within the sensor itself. **Value** String, max. 128 characters. **OID** 1.3.6.1.4.1.3181.10.6.1.99.3.1.3 (deviceConfigLocation)
latitude	A value in degrees such as: 50.123 **Value** String, max. 8 characters. **OID** 1.3.6.1.4.1.3181.10.6.1.99.3.1.4 (deviceConfigLatitude)
longitude	A value in degrees such as: 8.875 **Value** String, max. 8 characters. **OID** 1.3.6.1.4.1.3181.10.6.1.99.3.1.5 (deviceConfigLongitude)
altitude	A value in meters. **Value** String, max. 8 characters. **OID** 1.3.6.1.4.1.3181.10.6.1.99.3.1.6 (deviceConfigAltitude)

©2026 MICROSENS GmbH & Co. KG - Hamm/Germany - www.microsens.com

placement	Information where to find the device		
	Values	*UNSET*	Undefined
		FLOOR	Device is placed on the floor or within a double floor
		WALL	Device is hanging on the wall
		CEILING	Device is placed on the ceiling or hanging from the ceiling
		DUCT	Device is placed in a cable duct
		OUTSIDE	Device is placed outside of the building
		DESK	Device is placed on or under a desk
	OID	1.3.6.1.4.1.3181.10.6.1.99.3.1.7 (deviceConfigPlacement)	

©2026 MICROSENS GmbH & Co. KG - Hamm/Germany - www.microsens.com

product_type

The product type is used by the system to select the network protocol required to access the device. Note that for some devices a further configuration section exists under the Device.Controller section. Such additional config exists for type SMARTLIGHT_CONTROLLER and SMART_IO_CONTROLLER.

Values

VIRTUAL	Software defined sensor without a physical presence
SMARTLIGHT_CONTROLLER	SmartLight controller via IP. Also add device.controller.smartlight_config with same device_name.
SMART_IO_CONTROLLER	SmartIO controller via IP. Also add device.controller.smart_io_config with same device_name.
HM	HM wireless device via USB or Serial
FHEM	Attached via internal FHEM server
IP500	Native IP500 device not attached via MQTT
ENOCEAN	Attached via internal FHEM server
KNX	Attached via KNX server
CSLC_V2	Central SmartLight Controller via IP with 4x 6 light ports (CSLC V2). Also add device.controller.cslc_config with same device_name.
CSLC_24	Central SmartLight Controller via IP with 24 light ports. (CSLC V4). Also add device.controller.cslc_config with same device_name.
DIGITAL_IO_CONTROLLER	Smart Digital IO controller via IP with only digital inputs and outputs. Also add device.controller.smart_digital_io_config with same device_name.
MQTT	MQTT attached device which supports SmartOffice event topic interface
NEURON_LINK_2	NeuronLink 2 attached sensor or actor device
SMART_SENSOR_CONTROLLER	SmartSensorController to connect a NeuronGrid sensor or actor via PoE. Optionally, add device.controller.smartlight_config only if FW update is needed.
SLC24	1HU SmartLight Controller via IP with 24 light ports. Also add device.controller.cslc_config with same device_name.

OID 1.3.6.1.4.1.3181.10.6.1.99.3.1.8 (deviceConfigProductType)

sparepart_mode

When enabled, the module entry is ignored and its status is not evaluated. This way entries or devices can be parked. A possible failure of the device is not indicated. May be used to temporarily disabled devices but without the need to remove them from the configuration.

Values enabled, disabled

OID 1.3.6.1.4.1.3181.10.6.1.99.3.1.9 (deviceConfigSparepartMode)

©2026 MICROSENS GmbH & Co. KG - Hamm/Germany - www.microsens.com

device_id	Unique manufacturer dependent identifier of the device. For SmartLightController the MAC address of the controller is entered here. **Value** String, max. 32 characters. **OID** 1.3.6.1.4.1.3181.10.6.1.99.3.1.10 (deviceConfigDeviceId)
network_address	May be an IP or other type of address depending on the given network access method. Can be left blank for a SmartLightController. **Value** String, max. 50 characters. **OID** 1.3.6.1.4.1.3181.10.6.1.99.3.1.11 (deviceConfigNetworkAddress)
additional_parameter	Comma separated list of any parameter specific for this device. Example: panel=type A,refresh_rate=12 **Value** String, max. 512 characters. **OID** 1.3.6.1.4.1.3181.10.6.1.99.3.1.12 (deviceConfigAdditionalParameter)
network_failure_action	Defines what the actor does if the network connection fails or after reboot until communication is established. **Values** *KEEP_CURRENT* Light is kept in the current value *OFF* Light is switched off *ON* Light is 100% switched on *DIMMED* Light is set to the configured dim level **OID** 1.3.6.1.4.1.3181.10.6.1.99.3.1.13 (deviceConfigNetworkFailureAction)
identify	The actor will blink with its status led to signal its presence and physical location. Supply instance or 0 or nothing for all instances. **Action** Excecute command with parameter string max. 16 characters. **OID** 1.3.6.1.4.1.3181.10.6.1.99.3.1.14 (deviceConfigIdentify)
restart	Restart the device. **Action** Excecute command. **OID** 1.3.6.1.4.1.3181.10.6.1.99.3.1.15 (deviceConfigRestart)
calibrate	Start device specific calibration process if available. Can be used to calibrate the output power of LED driver for SLC types. Use keyword radar to calibrate a radar sensor connected to an SLC. **Action** Excecute command with parameter string max. 16 characters. **OID** 1.3.6.1.4.1.3181.10.6.1.99.3.1.16 (deviceConfigCalibrate)
pair	Start pairing process that couples individual device to this director. **Action** Excecute command. **OID** 1.3.6.1.4.1.3181.10.6.1.99.3.1.17 (deviceConfigPair)
unpair	Discard existing pairing between an individual device and this director. **Action** Excecute command. **OID** 1.3.6.1.4.1.3181.10.6.1.99.3.1.18 (deviceConfigUnpair)

©2026 MICROSENS GmbH & Co. KG - Hamm/Germany - www.microsens.com

update_firmware	Update the device firmware. When no file name is supplied, the latest version is automatically selected. Alternatively, a specific file name can be supplied to use another version. Use Management.files.firmware.display_files to view a list of available files under the SLC section. (applies to SmartLight Controllers) **Action** Excecute command with parameter string max. 128 characters. **OID** 1.3.6.1.4.1.3181.10.6.1.99.3.1.19 (deviceConfigUpdateFirmware)
test	Enable test mode.Without parameter will run a brief device dependent test. There may be specific parameter to facilitate quality assurance tests. Usually, not for customer operation. **Action** Excecute command with parameter string max. 16 characters. **OID** 1.3.6.1.4.1.3181.10.6.1.99.3.1.20 (deviceConfigTest)

Group	**actor_group_config**, dynamical size
Path	Device.SmartOffice.actor_group_config
Description	Defines a group of actors that support the same attribute and which shall be set together to the same value.

group_name	Unique group name referenced by the director **Value** String, max. 31 characters. **OID** 1.3.6.1.4.1.3181.10.6.1.99.4.1.2 (actorGroupConfigGroupName)
attribute	The attribute which is configured. Locally, identical attributes of the associated devices listed below are grouped. **Value** String, max. 31 characters. **OID** 1.3.6.1.4.1.3181.10.6.1.99.4.1.3 (actorGroupConfigAttribute)
associated_devices	List of all actors that supply information to a particular group. When an instance is used, here the syntax devicename.instance is used. Alternatively, a colon separator may be used instead of the dot. All records are comma separated. Instance ranges may be used: DEV.(1-4,12) This selects instances 1,2,3,4,12 from device DEV. **Value** String, max. 512 characters. **OID** 1.3.6.1.4.1.3181.10.6.1.99.4.1.4 (actorGroupConfigAssociatedDevices)
additional_parameter	Comma separated list of any parameter specific for this attribute if needed. **Value** String, max. 512 characters. **OID** 1.3.6.1.4.1.3181.10.6.1.99.4.1.5 (actorGroupConfigAdditionalParameter)

©2026 MICROSENS GmbH & Co. KG - Hamm/Germany - www.microsens.com

default_value	Defines the default value which is written to the actors upon system start until another value is written. When empty the value of 0 is used. **Value** String, max. 128 characters. **OID** 1.3.6.1.4.1.3181.10.6.1.99.4.1.6 (actorGroupConfigDefaultValue)
value_caching	When enabled the group target value is saved to local non volatile memory. Should the director restart, the cached values will be restored and send to the devices. This feature is useful to ensure uninterrupted operation even in the event of a system failure or to restore conditions after a power outage. ATTENTION: Not implemented. **Values** enabled, disabled **OID** 1.3.6.1.4.1.3181.10.6.1.99.4.1.7 (actorGroupConfigValueCaching)
additional_script_name	When the actor group is updated, an additional script, defined here, can be executed to run time consuming functions outside of the standard processing loop. Usually, this field is left empty. **Value** String, max. 63 characters. **OID** 1.3.6.1.4.1.3181.10.6.1.99.4.1.8 (actorGroupConfigAdditionalScriptName)
manual_set_value	This command permits setting of the group value manually bypassing the defined script logic. This is intended for testing only. Important: This manual setting always acts on priority level 8. Important: manual override will continue until manually released by setting ..manual_set_value = (type enter without a value). **Action** Excecute command with parameter string max. 128 characters. **OID** 1.3.6.1.4.1.3181.10.6.1.99.4.1.9 (actorGroupConfigManualSetValue)

Group	**sensor_group_config**, dynamical size
Path	Device.SmartOffice.sensor_group_config
Description	Defines a group of sensors that support the same attribute and whose data should be interpreted together.
group_name	Unique group name referenced by the director **Value** String, max. 31 characters. **OID** 1.3.6.1.4.1.3181.10.6.1.99.5.1.2 (sensorGroupConfigGroupName)
attribute	The attribute which is configured. Locally, identical attributes of the associated devices listed below are grouped. **Value** String, max. 31 characters. **OID** 1.3.6.1.4.1.3181.10.6.1.99.5.1.3 (sensorGroupConfigAttribute)

©2026 MICROSENS GmbH & Co. KG - Hamm/Germany - www.microsens.com

associated_devices	List of all sensors that supply information to a particular group. When an instance is used, here the syntax devicename.instance is used. Alternatively, a colon separator may be used instead of the dot. All records are comma separated. Instance ranges may be used: DEV.(1-4,12) This selects instances 1,2,3,4,12 from device DEV. **Value** String, max. 512 characters. **OID** 1.3.6.1.4.1.3181.10.6.1.99.5.1.4 (sensorGroupConfigAssociatedDevices)
unit	When defined, the received values will be tagged with this unit. In most cases the unit is already supplied by the sensor. Use this field when (some) associated sensors do not supply the expected unit string. Can be left empty in most cases. **Value** String, max. 8 characters. **OID** 1.3.6.1.4.1.3181.10.6.1.99.5.1.5 (sensorGroupConfigUnit)
decimal_places	This parameter is used to define the number of decimal places behind the comma for decimal numbers. It has no effect on textual group values. **Value** Number in range 0-9 **OID** 1.3.6.1.4.1.3181.10.6.1.99.5.1.6 (sensorGroupConfigDecimalPlaces)
value_caching	This feature is not currently implemented. **Values** enabled, disabled **OID** 1.3.6.1.4.1.3181.10.6.1.99.5.1.7 (sensorGroupConfigValueCaching)

©2026 MICROSENS GmbH & Co. KG - Hamm/Germany - www.microsens.com

run_script_when	Defines how much the sensor group status needs to change in order to trigger the run of a script (and the optional additional_script). This also triggers MQTT and MODBUS activity. These protocols trigger at the same condition as the scripts when configured to send out sensor group changes. (The script names may be left empty if only MQTT is required for example). The parameter can be used to limit the number of script runs by not following little changes that lead to no effect. This filter is logically behind the sensor specific limits defined elsewhere is this table. When the sensor filter is setup well, then this filter here can be relaxed.

©2026 MICROSENS GmbH & Co. KG - Hamm/Germany - www.microsens.com

Values	*DISABLED*	This group does not request a script run. The group value is still updated and available for read
	ANY_CHANGE	Any change of a group value will trigger a script run. No filter is active. This is useful for digital inputs but usually not recommendable for analog signals with lots of small variations.
	LIMIT_CROSSED	The script will run whenever at least one sensor in the group will reach a limit (LOWER_LIMIT or UPPER_LIMIT) and also when no sensor reports a limit, while the limit was reached before. Refer to lower_boundary parameter for additional details.
	AVG_ABSOLUTE	The script will trigger only on changes of the average value. The value must deviate from the last reported value by the absolute value defined for run_script_delta. Note that some sensors indicate intermediate steps even when a large change of the measured value is expected. In such cases delta between evaluations may be smaller than expected and the trigger may not fire if the run_script_delta value is too large.
	AVG_PERCENT	The script will trigger only on changes of the average value. The value must deviate from the last reported value by the percentage value defined for run_script_delta. Also see comment for AVG_ABSOLUTE.
	TOTAL_ABSOLUTE	The script will trigger only on changes of the total value. The value must deviate from the last reported value by the absolute value defined for run_script_delta. Note that some sensors indicate intermediate steps even when a large change of the measured value is expected. In such cases delta between evaluations may be smaller than expected and the trigger may not fire if the run_script_delta value is too large.
	TOTAL_PERCENT	The script will trigger only on changes of the total value. The value must deviate from the last reported value by the percentage value defined for run_script_delta. Also see comment for TOTAL_ABSOLUTE.
	NEW_PEAK_LEVEL	The script will run when a new peak level is detected. This applies to lower and upper peak level. When the peak level is manually reset, the script will not immediately execute, but will on the next update of the group data.
	ANY_UPDATE	Like ANY_CHANGE but even updates if no values have changed as result of new sensor reports. This setting can cause significant system load depending on the update frequency of the sensor.

©2026 MICROSENS GmbH & Co. KG - Hamm/Germany - www.microsens.com

ZERO_CROSSING	The script will trigger on change from zero to any other value and from any value to zero. It will not trigger when the average value changes between different non zero values.

OID 1.3.6.1.4.1.3181.10.6.1.99.5.1.8 (sensorGroupConfigRunScriptWhen)

---

run_script_delta

Defines how much the value can deviate before a value change is reported automatically. Depending on the setting of the report_mode an absolute or a percent value is expected.

Value String, max. 32 characters.

OID 1.3.6.1.4.1.3181.10.6.1.99.5.1.9 (sensorGroupConfigRunScriptDelta)

---

run_script_idle_time

When unequal to 0, the script and possible MQTT, MODBUS output are executed after the specified value in seconds. The time is restarted whenever the script is executed for whatever reason. This feature is useful to guarantee that a group update is executed even if the reported data never change.

Value Number in range 0-0xFFFFFFFF

OID 1.3.6.1.4.1.3181.10.6.1.99.5.1.10 (sensorGroupConfigRunScriptIdleTime)

---

script_name

When the group is updated and the required conditions are met, the script specified in this parameter is executed. If the parameter is left blank, the standard MS_SmartOfficeControl.ms script is executed. The specified script should not contain any time consuming functions. Syntax: = appname/ filename:subroutine The appname and subroutine name are optional. Without appname, the script must be located in xml_cli_scripts folder.

Value String, max. 63 characters.

OID 1.3.6.1.4.1.3181.10.6.1.99.5.1.11 (sensorGroupConfigScriptName)

---

additional_script_name

When the group is updated and the required conditions are met and a script is defined here, this script is executed in the background after the standard processing for this group has taken place. An additional script, defined here, can be used to run time consuming functions outside of the standard processing loop. Usually, this field is left empty.

Value String, max. 63 characters.

OID 1.3.6.1.4.1.3181.10.6.1.99.5.1.12 (sensorGroupConfigAdditionalScriptName)

©2026 MICROSENS GmbH & Co. KG - Hamm/Germany - www.microsens.com

report_mode	This and the following six parameters act directly in the sensor device driver with the aim to minimize incoming traffic into the system right at the source. The report_mode acts in combination with the update_delta. Do not confuse these parameters with the run_script_.. parameter which act later in the processing chain after the sensor data are received. **Values** *DISABLED* – This sensor does not transmit any information on its own *PASSIVE* – The sensor can be polled but does not generate messages on its own *DELTA_PERCENT* – The sensor can be polled and also generates status updates when its value changes for at least the percentage defined for the update_delta value *DELTA_ABSOLUTE* – The sensor can be polled and also generates status updates its absolute value changes for more then defined for the update_delta *ON_THRESHOLD* – The sensor can be polled and also generates status updates when the lower or upper boundary is crossed *TEST* – In test mode the sensor may generate test data output independent of the actual sensor data values **OID** 1.3.6.1.4.1.3181.10.6.1.99.5.1.13 (sensorGroupConfigReportMode)
additional_parameter	Optional, comma separated list of any parameter specific for the sensor (driver) that supports this attribute. Usually empty. **Value** String, max. 128 characters. **OID** 1.3.6.1.4.1.3181.10.6.1.99.5.1.14 (sensorGroupConfigAdditionalParameter)
value_lifetime	Defines after how many seconds the current group value is considered too old when no further update is received. Any value update via an associated sensor retriggers this timer. If the timer expires the group state changes to TIMEOUT. A value of 0 disables the aging feature. **Value** Number in range 0-26000 **OID** 1.3.6.1.4.1.3181.10.6.1.99.5.1.15 (sensorGroupConfigValueLifetime)
lower_boundary	When the measured value of any individual sensor is equal or below this value the sensor_list status is set to LOWER_LIMIT. The value is configured with a numerical value optionally followed by a unit. To eliminate superflous events caused by slight variations of the sensor value, a hysteresis can be specified. The value will then return back to OK, only when the value rises again above the boundary + hysteresis. Syntax: boundary, hysteresis. Example: 12000mW, 500mW. The unit is optional and the value must be in the same unit as the reported value. **Value** String, max. 32 characters. **OID** 1.3.6.1.4.1.3181.10.6.1.99.5.1.16 (sensorGroupConfigLowerBoundary)

©2026 MICROSENS GmbH & Co. KG - Hamm/Germany - www.microsens.com

upper_boundary	When the measured value of any individual sensor is equal or above this value the sensor_list status is set to UPPER_LIMIT. The value is configured with a numerical value optionally followed by a unit. To eliminate superflous events caused by slight variations of the sensor value, a hysteresis can be specified. The value will then return back to OK, only when the value decreases again below the boundary - hysteresis. Syntax: boundary, hysteresis. Example: 19.5C, 1.5C **Value** String, max. 32 characters. **OID** 1.3.6.1.4.1.3181.10.6.1.99.5.1.17 (sensorGroupConfigUpperBoundary)
boundary_hysteresis	How much the value must return within bounds before the alarm condition is cleared. This value is no longer used as the hysteresis is now specified as second value of the boundary parameter. **Values** *NONE* No hysteresis applies *LOW* A low hysteresis applies. The value reacts more quickly but is more prone to oscillating. The actual hysteresis depends on the configured update delta value. *HIGH* A higher hysteresis applies. The value need to change more before they are reported but oscillating is safely prevented. The actual hysteresis depends on the configured update delta value. **OID** 1.3.6.1.4.1.3181.10.6.1.99.5.1.18 (sensorGroupConfigBoundaryHysteresis)
update_delta	Defines how much the value can deviate before a value change is reported automatically. Depending on the setting of the report_mode an absolute or a percent value is expected. This value is used by sensor driver and limits inbound sensor traffic. **Value** String, max. 32 characters. **OID** 1.3.6.1.4.1.3181.10.6.1.99.5.1.19 (sensorGroupConfigUpdateDelta)
rate_limit	Defines how quickly the value is reported. Defined in units of 100ms. 0 means no rate limiting. This value is used by sensor driver and limits inbound sensor traffic. **Value** Number in range 0-250 **OID** 1.3.6.1.4.1.3181.10.6.1.99.5.1.20 (sensorGroupConfigRateLimit)
report_idle_time	Defines how often the value is reported at least, even if no changes have occured. Defined in seconds. 0 means no automatic reporting. This parameter may be used to ensure data are present even when never changing. The timer is restarted when a value is reported due to other reason. **Value** Number in range 0-65000 **OID** 1.3.6.1.4.1.3181.10.6.1.99.5.1.21 (sensorGroupConfigReportIdleTime)

©2026 MICROSENS GmbH & Co. KG - Hamm/Germany - www.microsens.com

clear_values	Clear status values for minimum_peak_hold and maximum_peak_hold of the associated sensor_group_status. **Action** Excecute command. **OID** 1.3.6.1.4.1.3181.10.6.1.99.5.1.22 (sensorGroupConfigClearValues)

Group	**director_config**
Path	Device.SmartOffice.director_config
Description	General configuration of the director.

domain_name	**Value**	String, max. 16 characters.	
	OID	1.3.6.1.4.1.3181.10.6.1.99.2.1.2 (directorConfigDomainName)	
general_mode	**Values**	*DISABLED*	The director will not perform any SmartOffice operation
		AUTOMATIC	The director will automatically perform according to the configuration and scripts as defined. Normal mode.
		PASSIVE	The director will process sensor information but will not update actor settings regardless of any script definitions.
	OID	1.3.6.1.4.1.3181.10.6.1.99.2.1.3 (directorConfigGeneralMode)	
act_on_ungrouped_sensors	When set any sensor attributes which are not configured to be part of a sensor group, will also trigger the regular script execution. This may be selected in smaller setups to save the effort of defining groups. Note that no event rate limiting can be applied to ungrouped sensors and thus using this mode can result in overloading the system leading to sluggish response times. **Values** enabled, disabled **OID** 1.3.6.1.4.1.3181.10.6.1.99.2.1.4 (directorConfigActOnUngroupedSensors)		

©2026 MICROSENS GmbH & Co. KG - Hamm/Germany - www.microsens.com

scan_filter	The scan filter may be used to limit the displayed output when applying the scan_light_controllers action.		
	Values	*ALL*	Display all detected controllers. The filter is off.
		LOCAL	Display all detected controllers connected to the local device.
		PAIRED	Display all detected controllers paired to any device.
		UNPAIRED	Display all detected controllers not paired to any device.
		SLC	Display all detected smart light controllers
		CSLC	Display all detected central smart light controllers
		SIOC	Display all detected smart i/o controllers
		SLC24	Display all detect 24 channel SLC
		CAN	Display all detected CAN attached devices like NEURON_LINK_2
	OID	1.3.6.1.4.1.3181.10.6.1.99.2.1.5 (directorConfigScanFilter)	
scan_light_controllers	Scan the local network for reachable SmartLightController and display a list. The scan_filter parameter is applied.		
	Action	Excecute command.	
	OID	1.3.6.1.4.1.3181.10.6.1.99.2.1.6 (directorConfigScanLightControllers)	

©2026 MICROSENS GmbH & Co. KG - Hamm/Germany - www.microsens.com

24.5 SmartOffice Status Parameters

Group	**health_report**
Path	Device.SmartOffice.health_report
Description	
any_errors	The sum of any error as indicated in this table **Value** Number in range 0-65535 **OID** 1.3.6.1.4.1.3181.10.6.1.99.108.1.2 (healthReportAnyErrors)
any_warnings	The sum of any warnings as indicated in this table **Value** Number in range 0-65535 **OID** 1.3.6.1.4.1.3181.10.6.1.99.108.1.3 (healthReportAnyWarnings)
last_update_time	Indicates the time when the status value were last updated **Value** TIMESTAMP0-0xFFFFFFFF **OID** 1.3.6.1.4.1.3181.10.6.1.99.108.1.4 (healthReportLastUpdateTime)

©2026 MICROSENS GmbH & Co. KG - Hamm/Germany - www.microsens.com

devices_defined	The total number of devices configured via smart_office.device_config
	Value Number in range 0-65535
	OID 1.3.6.1.4.1.3181.10.6.1.99.108.1.5 (healthReportDevicesDefined)
devices_not_ready	The number of configured devices that are not in NORMAL or SPAREPART state
	Value Number in range 0-65535
	OID 1.3.6.1.4.1.3181.10.6.1.99.108.1.6 (healthReportDevicesNotReady)
sparepart_devices	The number of configured devices that are in SPAREPART state
	Value Number in range 0-65535
	OID 1.3.6.1.4.1.3181.10.6.1.99.108.1.7 (healthReportSparepartDevices)
sensor_groups_defined	The number of smart_office.sensor_group_config entries defined
	Value Number in range 0-65535
	OID 1.3.6.1.4.1.3181.10.6.1.99.108.1.8 (healthReportSensorGroupsDefined)
sensor_group_warnings	The number of smart_office.sensor_group_status entries which are not OK but also not failed. A special condition exists
	Value Number in range 0-65535
	OID 1.3.6.1.4.1.3181.10.6.1.99.108.1.9 (healthReportSensorGroupWarnings)
sensor_group_errors	The number of smart_office.sensor_group_status entries which are in FAILED condition or have a failed associated device
	Value Number in range 0-65535
	OID 1.3.6.1.4.1.3181.10.6.1.99.108.1.10 (healthReportSensorGroupErrors)
sensor_groups_no_devs	The number of smart_office.sensor_groups for which no device is configured or the expected device has not registered.
	Value Number in range 0-65535
	OID 1.3.6.1.4.1.3181.10.6.1.99.108.1.11 (healthReportSensorGroupsNoDevs)
sensor_attrs_registered	The number of sensor attributes that have been registered
	Value Number in range 0-65535
	OID 1.3.6.1.4.1.3181.10.6.1.99.108.1.12 (healthReportSensorAttrsRegistered)

©2026 MICROSENS GmbH & Co. KG - Hamm/Germany - www.microsens.com

sensor_attr_warnings	The number of sensor attributes that are not OK but also not failed. A special condition or a timeout exists **Value** Number in range 0-65535 **OID** 1.3.6.1.4.1.3181.10.6.1.99.108.1.13 (healthReportSensorAttrWarnings)
sensor_attr_errors	The number of sensor attributes that are in FAILED condition **Value** Number in range 0-65535 **OID** 1.3.6.1.4.1.3181.10.6.1.99.108.1.14 (healthReportSensorAttrErrors)
actor_groups_defined	The number of smart_office.actor_group_config entries defined **Value** Number in range 0-65535 **OID** 1.3.6.1.4.1.3181.10.6.1.99.108.1.15 (healthReportActorGroupsDefined)
actor_group_warnings	The number of smart_office.actor_group_status entries which are not OK but also not failed. A special condition exists **Value** Number in range 0-65535 **OID** 1.3.6.1.4.1.3181.10.6.1.99.108.1.16 (healthReportActorGroupWarnings)
actor_group_errors	The number of smart_office.actor_group_status entries which are in FAILED condition or have a failed associated device **Value** Number in range 0-65535 **OID** 1.3.6.1.4.1.3181.10.6.1.99.108.1.17 (healthReportActorGroupErrors)
actor_groups_no_devs	The number of smart_office.actor_groups for which no device is configured or the expected device has not registered. **Value** Number in range 0-65535 **OID** 1.3.6.1.4.1.3181.10.6.1.99.108.1.18 (healthReportActorGroupsNoDevs)
actor_attrs_registered	The number of actor attributes that have been registered **Value** Number in range 0-65535 **OID** 1.3.6.1.4.1.3181.10.6.1.99.108.1.19 (healthReportActorAttrsRegistered)
actor_attr_warnings	The number of actor attributes that are not OK but also not failed. A special condition exists **Value** Number in range 0-65535 **OID** 1.3.6.1.4.1.3181.10.6.1.99.108.1.20 (healthReportActorAttrWarnings)

©2026 MICROSENS GmbH & Co. KG - Hamm/Germany - www.microsens.com

actor_attr_errors	The number of actor attributes that are in FAILED condition	
	Value	Number in range 0-65535
	OID	1.3.6.1.4.1.3181.10.6.1.99.108.1.21 (healthReportActorAttrErrors)

©2026 MICROSENS GmbH & Co. KG - Hamm/Germany - www.microsens.com

25 SmartOffice Controller

25.1 Key Features

Smart Light Controller

Above the standard device setup in the SmartOffice section, it is possible to configure more details and features via a specific set of parameters. Support for SLC versions V2,V3 and V4.

Smart IO Controller

The Smart I/O Controller offers a host of digital and analog interfaces which need to be configured. By setting an attribute the I/O channels are linked to SmartOffice sensor and actor groups.

CSLC

The Central SmartLight Controller (CSLC) offers 24 LED ports in a single high density 1U enclosure. The G6 firmware also runs on the CSLC hardware. Support for SLC versions V2 and V4

The CSLC is a high density LED controller for SmartOffice applications. Standard twisted pair cabling is used to connect up to 24 LED panels.

25.2 Functional Description

Preface

In the Controller section hardware device controller specific configuration option are grouped. These are SmartOffice related controller devices for which a more elaborate configuration is required than that provided under the normal SmartOffice device configuration section. Devices like the SmartLight Controller or the Smart I/O Controller can be configured in this section. Additonal similar controllers might be added in future releases.

©2026 MICROSENS GmbH & Co. KG - Hamm/Germany - www.microsens.com

25.3 Controller CLI Command Reference

The following table lists all CLI commands applicable for this feature section. For each parameter, the access mode is given:

R = Read Only, R/W = Read/Write, X = Executable Action.

Please note that the effective access rights are dependent on the login level of the user.

Category	Group	Table	Parameter	Options	Access	Description
Device.						
	controller.					SmartOffice Controller specific parameter
		smartlight_config[DYNAMIC].				Add elements as required for the number of used controllers of this type.
			name		R/W	Unique name must precisely match the device name specified under Device.SmartOffice.device_config.device_name for a device of product_type = SMARTLIGHT_CONTROLLER.
			type		R/W	Must match the used product type.
			max_source_power		R/W	Defines the maximum electrical power in W that can be consumed from the attached PoE source.
			panel_power_limit		R/W	Defines the maximum electrical power in W that is delivered to the attached light. This value holds a comma separated list of values in W (without the W). The number of elements depends on the controller type and its offered channels. When only one value is entered, it applies to all channels of the controller. Float values such as 7.5 are permitted. Example for SLC_V3: 30,25
			connection_timeout		R/W	When the communication between the host system and the controller cannot be established in the configured time, an automatic controller restart is initiated. A value of 0 disables this function. Value in seconds.
			manual_get_input		X	May be used to manually read an input value. Syntax example: manual_get_input = ain2 [R]. Append R or raw for unprocessed value. Otherwise the scaled input is displayed.
			manual_set_output		X	May be used to manually force an output value. Syntax example: manual_set_output = aout1 50 [raw]. Append raw if the value should be treated as a raw, unscaled value.
			read_command		X	May be used to manually read an internal controller value. Syntax: read_command = parameter.
			write_command		X	May be used to manually write an internal controller value. Syntax: write_command = parameter value.
		cslc_config[DYNAMIC].				Add elements as required for the number of used controllers of this type.
			name		R/W	Unique name must precisely match the device name specified under Device.SmartOffice.device_config.device_name for a device of product_type = SMARTLIGHT_CONTROLLER.
			cslc_type		R/W	Must match the used product type.
			max_source_power		R/W	Defines the maximum electrical power in W that can be consumed from the attached power source.

©2026 MICROSENS GmbH & Co. KG - Hamm/Germany - www.microsens.com

panel_power_limit_1_6	R/W	Defines the maximum electrical power in W that is delivered to the attached light. This value holds a comma separated list of values in W (without the W). When only one value is entered,it applies to all 6 channels of that group. Float values like 7.5 are permitted. Example:30,25,7.5,15,30,25
panel_power_limit_7_12	R/W	Defines the maximum electrical power in W that is delivered to the attached light. This value holds a comma separated list of values in W (without the W). When only one value is entered,it applies to all 6 channels of that group. Float values like 7.5 are permitted. Example:30,25,7.5,15,30,25
panel_power_limit_13_18	R/W	Defines the maximum electrical power in W that is delivered to the attached light. This value holds a comma separated list of values in W (without the W). When only one value is entered,it applies to all 6 channels of that group. Float values like 7.5 are permitted. Example:30,25,7.5,15,30,25
panel_power_limit_19_24	R/W	Defines the maximum electrical power in W that is delivered to the attached light. This value holds a comma separated list of values in W (without the W). When only one value is entered,it applies to all 6 channels of that group. Float values like 7.5 are permitted. Example:30,25,7.5,15,30,25
connection_timeout	R/W	When the communication between the host system and the controller cannot be established in the configured time, an automatic controller restart is initiated. A value of 0 disables this function. Value in seconds.
read_command	X	May be used to manually read an internal controller value. Syntax: read_command = parameter.
write_command	X	May be used to manually write an internal controller value. Syntax: write_command = parameter value.
smart_io_config[DYNAMIC].		Add elements as required for the number of used controllers of this type.
name	R/W	Unique name must precisely match the device name specified under Device.SmartOffice.device_config.device_name for a device of product_type = SMART_IO_CONTROLLER.
pt1_attribute	R/W	This defines the attribute with which it will register the PT1 temperature sensor to the system. Use attribute:instance syntax to define an instance id.
pt1_sensor_type	R/W	Defines the sensor connected to PT1 input.
pt1_num_averaged_values	R/W	Number of measured values used to calculate an average which then becomes the reported value used in the system.
pt1_filter_time	R/W	Time in seconds used to further filter the already averaged values. Set to 0 to disable filter function.
pt1_transformation	R/W	May be used to transform the input value to another format. Example C to F: =($*1.8)+32. Use # to append a unit to the value. May also be used for further linearization of the value. Annotation example: [0=$# (freezing),]40=$# (too hot), =$
pt2_attribute	R/W	This defines the attribute with which it will register the PT2 temperature sensor to the system. Use attribute:instance syntax to define an instance id.
pt2_sensor_type	R/W	Defines the sensor connected to PT2 input.
pt2_num_averaged_values	R/W	Number of measured values used to calculate an average then which becomes the reported value used in the system.

©2026 MICROSENS GmbH & Co. KG - Hamm/Germany - www.microsens.com

pt2_filter_time	R/W	Time in seconds used to further filter the already averaged values. Set to 0 to disable filter function.
pt2_transformation	R/W	May be used to transform the input value to another format. Example C to F: =($*1.8)+32. Use # to append a unit to the value. May also be used for further linearization of the value. Annotation example: [0=$# (freezing),]40=$# (too hot), =$
ain1_attribute	R/W	This defines the attribute with which it will register the analog input 1 to the system. Use attribute:instance syntax to define an instance id.
ain1_sensor_type	R/W	Defines the sensor connected to the analog input 1.
ain1_raw_min	R/W	Defines the lowest raw value data point.
ain1_raw_max	R/W	Defines the highest raw value data point.
ain1_scaled_min	R/W	Defines the lower scaled value at the lower raw value data point.
ain1_scaled_max	R/W	Defines the scaled value at the max raw value data point.
ain1_num_averaged_values	R/W	A number of measured values used to calculate an average which then becomes the reported value used in the system.
ain1_filter_time	R/W	Time in seconds used to further filter the already averaged values. Set to 0 to disable filter function.
ain1_update_delta	R/W	Defines how much the input value can deviate before a value change is reported. An absolute value is expected.
ain1_transformation	R/W	May be used to transform the input value to another format. Syntax: value=text, value=text,.. Or calculations: =$*10 Example C to F: =($*1.8)+32. Use # to append a unit to the value. Also in combination with calculation like: $/1000#mW. For more options please refer to separate documentation.
ain2_attribute	R/W	This defines the attribute with which it will register the analog input 2 to the system. Use attribute:instance syntax to define an instance id.
ain2_sensor_type	R/W	Defines the sensor connected to the analog input 2.
ain2_raw_min	R/W	Defines the lowest raw value data point.
ain2_raw_max	R/W	Defines the highest raw value data point.
ain2_scaled_min	R/W	Defines the lower scaled value at the lower raw value data point.
ain2_scaled_max	R/W	Defines the scaled value at the max raw value data point.
ain2_num_averaged_values	R/W	A number of measured values used to calculate an average which then becomes the reported value used in the system.
ain2_filter_time	R/W	Time in seconds used to further filter the already averaged values. Set to 0 to disable filter function.
ain2_update_delta	R/W	Defines how much the input value can deviate before a value change is reported. An absolute value is expected.
ain2_transformation	R/W	May be used to transform the input value to another format. Syntax: value=text, value=text,.. Or calculations: =$*10 Example C to F: =($*1.8)+32. Use # to append a unit to the value. Also in combination with calculation like: $/1000#mW. For more options please refer to separate documentation.
ain3_attribute	R/W	This defines the attribute with which it will register the analog input 3 to the system. Use attribute:instance syntax to define an instance id.

©2026 MICROSENS GmbH & Co. KG - Hamm/Germany - www.microsens.com

ain3_sensor_type	R/W	Defines the sensor connected to the analog input 3.
ain3_raw_min	R/W	Defines the lowest raw value data point.
ain3_raw_max	R/W	Defines the highest raw value data point.
ain3_scaled_min	R/W	Defines the lower scaled value at the lower raw value data point.
ain3_scaled_max	R/W	Defines the scaled value at the max raw value data point.
ain3_num_averaged_values	R/W	Number of measured values used to calculate an average which then becomes the reported value used in the system.
ain3_filter_time	R/W	Time in seconds used to further filter the already averaged values. Set to 0 to disable filter function.
ain3_update_delta	R/W	Defines how much the input value can deviate before a value change is reported. An absolute value is expected.
ain3_transformation	R/W	May be used to transform the input value to another format. Syntax: value=text, value=text,.. Or calculations: =$*10 Example C to F: =($*1.8)+32. Use # to append a unit to the value. Also in combination with calculation like: $/1000#mW. For more options please refer to separate documentation.
ain4_attribute	R/W	This defines the attribute with which it will register the analog input 4 to the system. Use attribute:instance syntax to define an instance id.
ain4_sensor_type	R/W	Defines the sensor connected to the analog input 4.
ain4_raw_min	R/W	Defines the lowest raw value data point.
ain4_raw_max	R/W	Defines the highest raw value data point.
ain4_scaled_min	R/W	Defines the lower scaled value at the lower raw value data point.
ain4_scaled_max	R/W	Defines the scaled value at the max raw value data point.
ain4_num_averaged_values	R/W	Number of measured values used to calculate an average which then becomes the reported value used in the system.
ain4_filter_time	R/W	Time in seconds used to further filter the already averaged values. Set to 0 to disable filter function.
ain4_update_delta	R/W	Defines how much the input value can deviate before a value change is reported. An absolute value is expected.
ain4_transformation	R/W	May be used to transform the input value to another format. Syntax: value=text, value=text,.. Or calculations: =$*10 Example C to F: =($*1.8)+32. Use # to append a unit to the value. Also in combination with calculation like: $/1000#mW. For more options please refer to separate documentation.
din1_mode	R/W	Used to enable the digital input 1.
din1_attribute	R/W	This defines the attribute with which it will register the digital input 1 to the system. If left blank, the digital input is not reported (disabled). Use attribute:instance syntax to define an instance id.
din1_transformation	R/W	May be used to transform the input value to another format. Syntax: 0=text, 1=text. Or 0=0,1=100 to make the digital value toggle between 0 and 100.
din1_debounce_time	R/W	Defines for how long a signal must be stable before being recognized as valid. Value in milliseconds.
din2_mode	R/W	Used to enable the digital input 2.

©2026 MICROSENS GmbH & Co. KG - Hamm/Germany - www.microsens.com

din2_attribute	R/W	This defines the attribute with which it will register the digital input 2 to the system. If left blank, the digital input is not reported (disabled). Use attribute:instance syntax to define an instance id.
din2_transformation	R/W	May be used to transform the input value to another format. Syntax: 0=text, 1=text. Or 0=0,1=100 to make the digital value toggle between 0 and 100.
din2_debounce_time	R/W	Defines for how long a signal must be stable before being recognized as valid. Value in milliseconds.
din3_mode	R/W	Used to enable the digital input 3.
din3_attribute	R/W	This defines the attribute with which it will register the digital input 3 to the system. If left blank, the digital input is not reported (disabled). Use attribute:instance syntax to define an instance id.
din3_transformation	R/W	May be used to transform the input value to another format. Syntax: 0=text, 1=text. Or 0=0,1=100 to make the digital value toggle between 0 and 100.
din3_debounce_time	R/W	Defines for how long a signal must be stable before being recognized as valid. Value in milliseconds.
din4_mode	R/W	Used to enable the digital input 4.
din4_attribute	R/W	This defines the attribute with which it will register the digital input 4 to the system. If left blank, the digital input is not reported (disabled). Use attribute:instance syntax to define an instance id.
din4_transformation	R/W	May be used to transform the input value to another format. Syntax: 0=text, 1=text. Or 0=0,1=100 to make the digital value toggle between 0 and 100.
din4_debounce_time	R/W	Defines for how long a signal must be stable before being recognized as valid. Value in milliseconds.
aout1_attribute	R/W	This defines the attribute with which it will register the analog output 1 to the system. If left blank, this analog output cannot not be used. Use attribute:instance syntax to define an instance id.
aout1_mode	R/W	Defines the output mode of digital output 1.
aout1_transformation	R/W	May be used to transform a possible non compliant output value (of the actor group) into a compliant value. Note this transformation takes place before the scaling parameter are applied. Syntax: text=value, text=value,.. Or calculations like: =$/1000 For more options please refer to separate documentation.
aout1_raw_min	R/W	Defines the lowest raw value data point.
aout1_raw_max	R/W	Defines the highest raw value data point.
aout1_scaled_min	R/W	Defines the lower scaled value at the lower raw value data point.
aout1_scaled_max	R/W	Defines the scaled value at the max raw value data point.
aout2_attribute	R/W	This defines the attribute with which it will register the analog output 2 to the system. If left blank, this analog output cannot not be used. Use attribute:instance syntax to define an instance id.
aout2_mode	R/W	Defines the output mode of digital output 1.
aout2_transformation	R/W	May be used to transform a possible non compliant output value (of the actor group) into a compliant value. Note this transformation takes place before the scaling parameter are applied. Syntax: text=value, text=value,.. Or calculations like: =$/1000 For more options please refer to separate documentation.
aout2_raw_min	R/W	Defines the lowest raw value data point.
aout2_raw_max	R/W	Defines the highest raw value data point.

©2026 MICROSENS GmbH & Co. KG - Hamm/Germany - www.microsens.com

aout2_scaled_min	R/W	Defines the lower scaled value at the lower raw value data point.
aout2_scaled_max	R/W	Defines the scaled value at the max raw value data point.
dout1_attribute	R/W	This defines the attribute with which it will register the digital output 1 to the system. If left blank, the output cannot not be used. Use attribute:instance syntax to define an instance id.
dout1_mode	R/W	Defines the output mode of digital output 1.
dout1_pwm_frequency	R/W	When PWM mode is selected, this parameter defines the PWM frequency in Hz.IMPORTANT: This frequency is used for both dout1 and dout2 when in PWM mode.
dout1_transformation	R/W	May be used to transform a textual input to acceptable digital values. Example: OFF=0, ON=1. Or to accept other numeric ranges: 0=0,100=1.
dout2_attribute	R/W	This defines the attribute with which it will register the digital output 2 to the system. If left blank, the output cannot not be used. Use attribute:instance syntax to define an instance id.
dout2_mode	R/W	Defines the output mode of digital output 2.
dout2_pwm_frequency	R/W	This parameter currently is not in use. The frequency of dout1 is used instead.
dout2_transformation	R/W	May be used to transform a textual input to acceptable digital values. Example: OFF=0, ON=1. Or to accept other numeric ranges: 0=0,100=1.
connection_timeout	R/W	When the communication between the host system and the controller cannot be established in the configured time, an automatic controller restart is initiated. A value of 0 disables this function. Value in seconds.
controller_mode	R/W	When set to other then normal additional test or debug information are provided.
manual_get_input	X	May be used to manually read an input value. Syntax example: manual_get_input = ain2 [R]. Append R or raw for unprocessed value. Otherwise the scaled input is displayed.
manual_set_output	X	May be used to manually force an output value. Syntax example: manual_set_output = aout1 50 [raw]. Append raw if the value should be treated as a raw, unscaled value.
read_command	X	May be used to manually read an internal controller value. Syntax: read_command = parameter.
write_command	X	May be used to manually write an internal controller value. Syntax: write_command = parameter value.
smart_digital_io_config[DYNAMIC]		Add elements as required for the number of used controllers of this type.
name	R/W	Unique name must precisely match the device name specified under Device.SmartOffice.device_config.device_name for a device of product_type = SMART_IO_CONTROLLER.
din1_mode	R/W	Used to enable the digital input 1.
din1_attribute	R/W	This defines the attribute with which it will register the input to the system. Use attribute:instance syntax to define an instance id.
din1_transformation	R/W	May be used to transform the input value to another format. Syntax: 0=text, 1=text. Or 0=0,1=100 to make the digital value toggle between 0 and 100.
din1_debounce_time	R/W	Defines for how long a signal must be stable before being recognized as valid. Value in milliseconds.

©2026 MICROSENS GmbH & Co. KG - Hamm/Germany - www.microsens.com

din2_mode	R/W	Used to enable the digital input 2.
din2_attribute	R/W	This defines the attribute with which it will register the input to the system. Use attribute:instance syntax to define an instance id.
din2_transformation	R/W	May be used to transform the input value to another format. Syntax: 0=text, 1=text. Or 0=0,1=100 to make the digital value toggle between 0 and 100.
din2_debounce_time	R/W	Defines for how long a signal must be stable before being recognized as valid. Value in milliseconds.
din3_mode	R/W	Used to enable the digital input 3.
din3_attribute	R/W	This defines the attribute with which it will register the input to the system. Use attribute:instance syntax to define an instance id.
din3_transformation	R/W	May be used to transform the input value to another format. Syntax: 0=text, 1=text. Or 0=0,1=100 to make the digital value toggle between 0 and 100.
din3_debounce_time	R/W	Defines for how long a signal must be stable before being recognized as valid. Value in milliseconds.
din4_mode	R/W	Used to enable the digital input 4.
din4_attribute	R/W	This defines the attribute with which it will register the input to the system. Use attribute:instance syntax to define an instance id.
din4_transformation	R/W	May be used to transform the input value to another format. Syntax: 0=text, 1=text. Or 0=0,1=100 to make the digital value toggle between 0 and 100.
din4_debounce_time	R/W	Defines for how long a signal must be stable before being recognized as valid. Value in milliseconds.
din5_mode	R/W	Used to enable the digital input 5.
din5_attribute	R/W	This defines the attribute with which it will register the input to the system. Use attribute:instance syntax to define an instance id.
din5_transformation	R/W	May be used to transform the input value to another format. Syntax: 0=text, 1=text. Or 0=0,1=100 to make the digital value toggle between 0 and 100.
din5_debounce_time	R/W	Defines for how long a signal must be stable before being recognized as valid. Value in milliseconds.
din6_mode	R/W	Used to enable the digital input 6.
din6_attribute	R/W	This defines the attribute with which it will register the input to the system. Use attribute:instance syntax to define an instance id.
din6_transformation	R/W	May be used to transform the input value to another format. Syntax: 0=text, 1=text. Or 0=0,1=100 to make the digital value toggle between 0 and 100.
din6_debounce_time	R/W	Defines for how long a signal must be stable before being recognized as valid. Value in milliseconds.
din7_mode	R/W	Used to enable the digital input 7.
din7_attribute	R/W	This defines the attribute with which it will register the input to the system. Use attribute:instance syntax to define an instance id.
din7_transformation	R/W	May be used to transform the input value to another format. Syntax: 0=text, 1=text. Or 0=0,1=100 to make the digital value toggle between 0 and 100.
din7_debounce_time	R/W	Defines for how long a signal must be stable before being recognized as valid. Value in milliseconds.
din8_mode	R/W	Used to enable the digital input 8.

©2026 MICROSENS GmbH & Co. KG - Hamm/Germany - www.microsens.com

din8_attribute	R/W	This defines the attribute with which it will register the input to the system. Use attribute:instance syntax to define an instance id.
din8_transformation	R/W	May be used to transform the input value to another format. Syntax: 0=text, 1=text. Or 0=0,1=100 to make the digital value toggle between 0 and 100.
din8_debounce_time	R/W	Defines for how long a signal must be stable before being recognized as valid. Value in milliseconds.
din9_mode	R/W	Used to enable the digital input 9.
din9_attribute	R/W	This defines the attribute with which it will register the input to the system. Use attribute:instance syntax to define an instance id.
din9_transformation	R/W	May be used to transform the input value to another format. Syntax: 0=text, 1=text. Or 0=0,1=100 to make the digital value toggle between 0 and 100.
din9_debounce_time	R/W	Defines for how long a signal must be stable before being recognized as valid. Value in milliseconds.
din10_mode	R/W	Used to enable the digital input 10.
din10_attribute	R/W	This defines the attribute with which it will register the input to the system. Use attribute:instance syntax to define an instance id.
din10_transformation	R/W	May be used to transform the input value to another format. Syntax: 0=text, 1=text. Or 0=0,1=100 to make the digital value toggle between 0 and 100.
din10_debounce_time	R/W	Defines for how long a signal must be stable before being recognized as valid. Value in milliseconds.
dout1_mode	R/W	Used to enable digital output 1.
dout1_attribute	R/W	Defines the attribute with which this digital output registered in the system. Use attribute:instance syntax to define an instance id.
dout1_transformation	R/W	May be used to transform a textual input to acceptable digital values. Example: OFF=0, ON=1. Or to accept other numeric ranges: 0=0,100=1.
dout2_mode	R/W	Used to enable digital output 2.
dout2_attribute	R/W	Defines the attribute with which this digital output registered in the system. Use attribute:instance syntax to define an instance id.
dout2_transformation	R/W	May be used to transform a textual input to acceptable digital values. Example: OFF=0, ON=1. Or to accept other numeric ranges: 0=0,100=1.
dout3_mode	R/W	Used to enable digital output 3.
dout3_attribute	R/W	Defines the attribute with which this digital output registered in the system. Use attribute:instance syntax to define an instance id.
dout3_transformation	R/W	May be used to transform a textual input to acceptable digital values. Example: OFF=0, ON=1. Or to accept other numeric ranges: 0=0,100=1.
dout4_mode	R/W	Used to enable digital output 4.
dout4_attribute	R/W	Defines the attribute with which this digital output registered in the system. Use attribute:instance syntax to define an instance id.
dout4_transformation	R/W	May be used to transform a textual input to acceptable digital values. Example: OFF=0, ON=1. Or to accept other numeric ranges: 0=0,100=1.
dout5_mode	R/W	Used to enable digital output 5.
dout5_attribute	R/W	Defines the attribute with which this digital output registered in the system. Use attribute:instance syntax to define an instance id.

©2026 MICROSENS GmbH & Co. KG - Hamm/Germany - www.microsens.com

dout5_transformation	R/W	May be used to transform a textual input to acceptable digital values. Example: OFF=0, ON=1. Or to accept other numeric ranges: 0=0,100=1.
dout6_mode	R/W	Used to enable digital output 6.
dout6_attribute	R/W	Defines the attribute with which this digital output registered in the system. Use attribute:instance syntax to define an instance id.
dout6_transformation	R/W	May be used to transform a textual input to acceptable digital values. Example: OFF=0, ON=1. Or to accept other numeric ranges: 0=0,100=1.
dout7_mode	R/W	Used to enable digital output 7.
dout7_attribute	R/W	Defines the attribute with which this digital output registered in the system. Use attribute:instance syntax to define an instance id.
dout7_transformation	R/W	May be used to transform a textual input to acceptable digital values. Example: OFF=0, ON=1. Or to accept other numeric ranges: 0=0,100=1.
dout8_mode	R/W	Used to enable digital output 8.
dout8_attribute	R/W	Defines the attribute with which this digital output registered in the system. Use attribute:instance syntax to define an instance id.
dout8_transformation	R/W	May be used to transform a textual input to acceptable digital values. Example: OFF=0, ON=1. Or to accept other numeric ranges: 0=0,100=1.
connection_timeout	R/W	When the communication between the host system and the controller cannot be established in the configured time, an automatic controller restart is initiated. A value of 0 disables this function. Value in seconds.
controller_mode	R/W	When set to other then normal additional test or debug information are provided.
manual_get_value	X	May be used to manually read an input value. Syntax example: manual_get_input = din2 [R]. Append R or raw for unprocessed value. Otherwise the transformed input is displayed.
manual_set_value	X	May be used to manually force an output value. Syntax example: manual_set_output = dout1 1.
read_command	X	May be used to manually read an internal controller value. Syntax: read_command = parameter.
write_command	X	May be used to manually write an internal controller value. Syntax: write_command = parameter value.

©2026 MICROSENS GmbH & Co. KG - Hamm/Germany - www.microsens.com

25.4 Controller Configuration Parameters

Group	**smartlight_config**, dynamical size
Path	Device.Controller.smartlight_config
Description	Add elements as required for the number of used controllers of this type.

name

Unique name must precisely match the device name specified under Device.SmartOffice.device_config.device_name for a device of product_type = SMARTLIGHT_CONTROLLER.

Value String, max. 31 characters.

OID 1.3.6.1.4.1.3181.10.6.1.106.1.1.2 (smartlightConfigName)

type

Must match the used product type.

Values

VERSION_1	Can be recognized by its white boxy housing
VERSION_2	Can be recognized by its flat bare metal enclosure
SLC_V3	Can be recognized by its long and slim housing. Dual channels
SLC_V4	Six channel controller

OID 1.3.6.1.4.1.3181.10.6.1.106.1.1.3 (smartlightConfigType)

max_source_power

Defines the maximum electrical power in W that can be consumed from the attached PoE source.

Value Number in range 0-100

OID 1.3.6.1.4.1.3181.10.6.1.106.1.1.4 (smartlightConfigMaxSourcePower)

panel_power_limit

Defines the maximum electrical power in W that is delivered to the attached light. This value holds a comma separated list of values in W (without the W). The number of elements depends on the controller type and its offered channels. When only one value is entered, it applies to all channels of the controller. Float values such as 7.5 are permitted. Example for SLC_V3: 30,25

Value String, max. 32 characters.

OID 1.3.6.1.4.1.3181.10.6.1.106.1.1.5 (smartlightConfigPanelPowerLimit)

connection_timeout

When the communication between the host system and the controller cannot be established in the configured time, an automatic controller restart is initiated. A value of 0 disables this function. Value in seconds.

Value Number in range 0-5000

OID 1.3.6.1.4.1.3181.10.6.1.106.1.1.6 (smartlightConfigConnectionTimeout)

©2026 MICROSENS GmbH & Co. KG - Hamm/Germany - www.microsens.com

manual_get_input	May be used to manually read an input value. Syntax example: manual_get_input = ain2 [R]. Append R or raw for unprocessed value. Otherwise the scaled input is displayed. **Action** Excecute command with parameter string max. 32 characters. **OID** 1.3.6.1.4.1.3181.10.6.1.106.1.1.7 (smartlightConfigManualGetInput)
manual_set_output	May be used to manually force an output value. Syntax example: manual_set_output = aout1 50 [raw]. Append raw if the value should be treated as a raw, unscaled value. **Action** Excecute command with parameter string max. 32 characters. **OID** 1.3.6.1.4.1.3181.10.6.1.106.1.1.8 (smartlightConfigManualSetOutput)
read_command	May be used to manually read an internal controller value. Syntax: read_command = parameter. **Action** Excecute command with parameter string max. 32 characters. **OID** 1.3.6.1.4.1.3181.10.6.1.106.1.1.9 (smartlightConfigReadCommand)
write_command	May be used to manually write an internal controller value. Syntax: write_command = parameter value. **Action** Excecute command with parameter string max. 128 characters. **OID** 1.3.6.1.4.1.3181.10.6.1.106.1.1.10 (smartlightConfigWriteCommand)

Group	**cslc_config**, dynamical size
Path	Device.Controller.cslc_config
Description	Add elements as required for the number of used controllers of this type.

name	Unique name must precisely match the device name specified under Device.SmartOffice.device_config.device_name for a device of product_type = SMARTLIGHT_CONTROLLER. **Value** String, max. 31 characters. **OID** 1.3.6.1.4.1.3181.10.6.1.106.2.1.2 (cslcConfigName)

©2026 MICROSENS GmbH & Co. KG - Hamm/Germany - www.microsens.com

cslc_type	Must match the used product type. **Values** *CSLC_V2* 4x6 channel controller, 1U enclosure *CSLC_V4* 24 channel controller, 1U enclosure *SLC24* 24 channel controller without director, 1U enclosure **OID** 1.3.6.1.4.1.3181.10.6.1.106.2.1.3 (cslcConfigCslcType)
max_source_power	Defines the maximum electrical power in W that can be consumed from the attached power source. **Value** Number in range 0-1200 **OID** 1.3.6.1.4.1.3181.10.6.1.106.2.1.4 (cslcConfigMaxSourcePower)
panel_power_limit_1_6	Defines the maximum electrical power in W that is delivered to the attached light. This value holds a comma separated list of values in W (without the W). When only one value is entered,it applies to all 6 channels of that group. Float values like 7.5 are permitted. Example:30,25,7.5,15,30,25 **Value** String, max. 32 characters. **OID** 1.3.6.1.4.1.3181.10.6.1.106.2.1.5 (cslcConfigPanelPowerLimit16)
panel_power_limit_7_12	Defines the maximum electrical power in W that is delivered to the attached light. This value holds a comma separated list of values in W (without the W). When only one value is entered,it applies to all 6 channels of that group. Float values like 7.5 are permitted. Example:30,25,7.5,15,30,25 **Value** String, max. 32 characters. **OID** 1.3.6.1.4.1.3181.10.6.1.106.2.1.6 (cslcConfigPanelPowerLimit712)
panel_power_limit_13_18	Defines the maximum electrical power in W that is delivered to the attached light. This value holds a comma separated list of values in W (without the W). When only one value is entered,it applies to all 6 channels of that group. Float values like 7.5 are permitted. Example:30,25,7.5,15,30,25 **Value** String, max. 32 characters. **OID** 1.3.6.1.4.1.3181.10.6.1.106.2.1.7 (cslcConfigPanelPowerLimit1318)
panel_power_limit_19_24	Defines the maximum electrical power in W that is delivered to the attached light. This value holds a comma separated list of values in W (without the W). When only one value is entered,it applies to all 6 channels of that group. Float values like 7.5 are permitted. Example:30,25,7.5,15,30,25 **Value** String, max. 32 characters. **OID** 1.3.6.1.4.1.3181.10.6.1.106.2.1.8 (cslcConfigPanelPowerLimit1924)

©2026 MICROSENS GmbH & Co. KG - Hamm/Germany - www.microsens.com

connection_timeout	When the communication between the host system and the controller cannot be established in the configured time, an automatic controller restart is initiated. A value of 0 disables this function. Value in seconds. **Value** Number in range 0-5000 **OID** 1.3.6.1.4.1.3181.10.6.1.106.2.1.9 (cslcConfigConnectionTimeout)
read_command	May be used to manually read an internal controller value. Syntax: read_command = parameter. **Action** Excecute command with parameter string max. 32 characters. **OID** 1.3.6.1.4.1.3181.10.6.1.106.2.1.10 (cslcConfigReadCommand)
write_command	May be used to manually write an internal controller value. Syntax: write_command = parameter value. **Action** Excecute command with parameter string max. 128 characters. **OID** 1.3.6.1.4.1.3181.10.6.1.106.2.1.11 (cslcConfigWriteCommand)

Group	**smart_io_config**, dynamical size
Path	Device.Controller.smart_io_config
Description	Add elements as required for the number of used controllers of this type.

name	Unique name must precisely match the device name specified under Device.SmartOffice.device_config.device_name for a device of product_type = SMART_IO_CONTROLLER. **Value** String, max. 31 characters. **OID** 1.3.6.1.4.1.3181.10.6.1.106.3.1.2 (smartIoConfigName)
pt1_attribute	This defines the attribute with which it will register the PT1 temperature sensor to the system. Use attribute:instance syntax to define an instance id. **Value** String, max. 32 characters. **OID** 1.3.6.1.4.1.3181.10.6.1.106.3.1.3 (smartIoConfigPt1Attribute)

©2026 MICROSENS GmbH & Co. KG - Hamm/Germany - www.microsens.com

pt1_sensor_type	Defines the sensor connected to PT1 input.		
	Values	*UNUSED*	Input is not connected
		PT100_CELSIUS	PT100 sensor with 100 Ohm at 0C. Note: The dipswitch on the device must be set to match the configuration!
		PT1000_CELSIUS	PT1000 sensor with 1000 Ohm at 0C. Note: The dipswitch on the device must be set to match the configuration!
		PT100_FAHRENHEIT	PT100 sensor with 100 Ohm. Note: The dipswitch on the device must be set to match the configuration!
		PT1000_FAHRENHEIT	PT1000 sensor with 1000 Ohm. Note: The dipswitch on the device must be set to match the configuration!
	OID	1.3.6.1.4.1.3181.10.6.1.106.3.1.4 (smartIoConfigPt1SensorType)	
pt1_num_averaged_values	Number of measured values used to calculate an average which then becomes the reported value used in the system.		
	Value	Number in range 1-100	
	OID	1.3.6.1.4.1.3181.10.6.1.106.3.1.5 (smartIoConfigPt1NumAveragedValues)	
pt1_filter_time	Time in seconds used to further filter the already averaged values. Set to 0 to disable filter function.		
	Value	Number in range 0-10	
	OID	1.3.6.1.4.1.3181.10.6.1.106.3.1.6 (smartIoConfigPt1FilterTime)	
pt1_transformation	May be used to transform the input value to another format. Example C to F: =($*1.8)+32. Use # to append a unit to the value. May also be used for further linearization of the value. Annotation example: [0=$# (freezing),]40=$# (too hot), =$		
	Value	String, max. 32 characters.	
	OID	1.3.6.1.4.1.3181.10.6.1.106.3.1.7 (smartIoConfigPt1Transformation)	
pt2_attribute	This defines the attribute with which it will register the PT2 temperature sensor to the system. Use attribute:instance syntax to define an instance id.		
	Value	String, max. 32 characters.	
	OID	1.3.6.1.4.1.3181.10.6.1.106.3.1.8 (smartIoConfigPt2Attribute)	

©2026 MICROSENS GmbH & Co. KG - Hamm/Germany - www.microsens.com

pt2_sensor_type	Defines the sensor connected to PT2 input.		
	Values	*UNUSED*	Input is not connected
		PT100_CELSIUS	PT100 sensor with 100 Ohm at 0C. Note: The dipswitch on the device must be set to match the configuration!
		PT1000_CELSIUS	PT1000 sensor with 1000 Ohm at 0C. Note: The dipswitch on the device must be set to match the configuration!
		PT100_FAHRENHEIT	PT100 sensor with 100 Ohm. Note: The dipswitch on the device must be set to match the configuration!
		PT1000_FAHRENHEIT	PT1000 sensor with 1000 Ohm. Note: The dipswitch on the device must be set to match the configuration!
	OID	1.3.6.1.4.1.3181.10.6.1.106.3.1.9 (smartIoConfigPt2SensorType)	
pt2_num_averaged_values	Number of measured values used to calculate an average then which becomes the reported value used in the system.		
	Value	Number in range 1-100	
	OID	1.3.6.1.4.1.3181.10.6.1.106.3.1.10 (smartIoConfigPt2NumAveragedValues)	
pt2_filter_time	Time in seconds used to further filter the already averaged values. Set to 0 to disable filter function.		
	Value	Number in range 0-10	
	OID	1.3.6.1.4.1.3181.10.6.1.106.3.1.11 (smartIoConfigPt2FilterTime)	
pt2_transformation	May be used to transform the input value to another format. Example C to F: =($*1.8)+32. Use # to append a unit to the value. May also be used for further linearization of the value. Annotation example: [0=$# (freezing),]40=$# (too hot), =$		
	Value	String, max. 32 characters.	
	OID	1.3.6.1.4.1.3181.10.6.1.106.3.1.12 (smartIoConfigPt2Transformation)	
ain1_attribute	This defines the attribute with which it will register the analog input 1 to the system. Use attribute:instance syntax to define an instance id.		
	Value	String, max. 32 characters.	
	OID	1.3.6.1.4.1.3181.10.6.1.106.3.1.13 (smartIoConfigAin1Attribute)	

©2026 MICROSENS GmbH & Co. KG - Hamm/Germany - www.microsens.com

ain1_sensor_type	Defines the sensor connected to the analog input 1.		
	Values	*UNUSED*	Input is not connected
		VOLT_0_TO_10	Input voltage range between 0 and 10VDC. Note: The dipswitch on the device must be set to match the configuration!
		MILLIAMP_0_TO_20	Input current range between 0 and 20mA. Note: The dipswitch on the device must be set to match the configuration!
	OID	1.3.6.1.4.1.3181.10.6.1.106.3.1.14 (smartIoConfigAin1SensorType)	
ain1_raw_min	Defines the lowest raw value data point.		
	Value	String, max. 8 characters.	
	OID	1.3.6.1.4.1.3181.10.6.1.106.3.1.15 (smartIoConfigAin1RawMin)	
ain1_raw_max	Defines the highest raw value data point.		
	Value	String, max. 8 characters.	
	OID	1.3.6.1.4.1.3181.10.6.1.106.3.1.16 (smartIoConfigAin1RawMax)	
ain1_scaled_min	Defines the lower scaled value at the lower raw value data point.		
	Value	String, max. 8 characters.	
	OID	1.3.6.1.4.1.3181.10.6.1.106.3.1.17 (smartIoConfigAin1ScaledMin)	
ain1_scaled_max	Defines the scaled value at the max raw value data point.		
	Value	String, max. 8 characters.	
	OID	1.3.6.1.4.1.3181.10.6.1.106.3.1.18 (smartIoConfigAin1ScaledMax)	
ain1_num_averaged_values	Number of measured values used to calculate an average which then becomes the reported value used in the system.		
	Value	Number in range 1-100	
	OID	1.3.6.1.4.1.3181.10.6.1.106.3.1.19 (smartIoConfigAin1NumAveragedValues)	
ain1_filter_time	Time in seconds used to further filter the already averaged values. Set to 0 to disable filter function.		
	Value	Number in range 0-10	
	OID	1.3.6.1.4.1.3181.10.6.1.106.3.1.20 (smartIoConfigAin1FilterTime)	

©2026 MICROSENS GmbH & Co. KG - Hamm/Germany - www.microsens.com

ain1_update_delta	Defines how much the input value can deviate before a value change is reported. An absolute value is expected. **Value** String, max. 8 characters. **OID** 1.3.6.1.4.1.3181.10.6.1.106.3.1.21 (smartIoConfigAin1UpdateDelta)
ain1_transformation	May be used to transform the input value to another format. Syntax: value=text, value=text,.. Or calculations: =$*10 Example C to F: =($*1.8)+32. Use # to append a unit to the value. Also in combination with calculation like: $/1000#mW. For more options please refer to separate documentation. **Value** String, max. 128 characters. **OID** 1.3.6.1.4.1.3181.10.6.1.106.3.1.22 (smartIoConfigAin1Transformation)
ain2_attribute	This defines the attribute with which it will register the analog input 2 to the system. Use attribute:instance syntax to define an instance id. **Value** String, max. 32 characters. **OID** 1.3.6.1.4.1.3181.10.6.1.106.3.1.23 (smartIoConfigAin2Attribute)
ain2_sensor_type	Defines the sensor connected to the analog input 2. **Values** *UNUSED* Input is not connected *VOLT_0_TO_10* Input voltage range between 0 and 10VDC. Note: The dipswitch on the device must be set to match the configuration! *MILLIAMP_0_TO_20* Input current range between 0 and 20mA. Note: The dipswitch on the device must be set to match the configuration! **OID** 1.3.6.1.4.1.3181.10.6.1.106.3.1.24 (smartIoConfigAin2SensorType)
ain2_raw_min	Defines the lowest raw value data point. **Value** String, max. 8 characters. **OID** 1.3.6.1.4.1.3181.10.6.1.106.3.1.25 (smartIoConfigAin2RawMin)
ain2_raw_max	Defines the highest raw value data point. **Value** String, max. 8 characters. **OID** 1.3.6.1.4.1.3181.10.6.1.106.3.1.26 (smartIoConfigAin2RawMax)
ain2_scaled_min	Defines the lower scaled value at the lower raw value data point. **Value** String, max. 8 characters. **OID** 1.3.6.1.4.1.3181.10.6.1.106.3.1.27 (smartIoConfigAin2ScaledMin)

©2026 MICROSENS GmbH & Co. KG - Hamm/Germany - www.microsens.com

ain2_scaled_max	Defines the scaled value at the max raw value data point. **Value** String, max. 8 characters. **OID** 1.3.6.1.4.1.3181.10.6.1.106.3.1.28 (smartIoConfigAin2ScaledMax)
ain2_num_averaged_values	Number of measured values used to calculate an average which then becomes the reported value used in the system. **Value** Number in range 1-100 **OID** 1.3.6.1.4.1.3181.10.6.1.106.3.1.29 (smartIoConfigAin2NumAveragedValues)
ain2_filter_time	Time in seconds used to further filter the already averaged values. Set to 0 to disable filter function. **Value** Number in range 0-10 **OID** 1.3.6.1.4.1.3181.10.6.1.106.3.1.30 (smartIoConfigAin2FilterTime)
ain2_update_delta	Defines how much the input value can deviate before a value change is reported. An absolute value is expected. **Value** String, max. 8 characters. **OID** 1.3.6.1.4.1.3181.10.6.1.106.3.1.31 (smartIoConfigAin2UpdateDelta)
ain2_transformation	May be used to transform the input value to another format. Syntax: value=text, value=text,.. Or calculations: =$*10 Example C to F: =($*1.8)+32. Use # to append a unit to the value. Also in combination with calculation like: $/1000#mW. For more options please refer to separate documentation. **Value** String, max. 128 characters. **OID** 1.3.6.1.4.1.3181.10.6.1.106.3.1.32 (smartIoConfigAin2Transformation)
ain3_attribute	This defines the attribute with which it will register the analog input 3 to the system. Use attribute:instance syntax to define an instance id. **Value** String, max. 32 characters. **OID** 1.3.6.1.4.1.3181.10.6.1.106.3.1.33 (smartIoConfigAin3Attribute)

©2026 MICROSENS GmbH & Co. KG - Hamm/Germany - www.microsens.com

ain3_sensor_type	Defines the sensor connected to the analog input 3.		
	Values	*UNUSED*	Input is not connected
		VOLT_0_TO_10	Input voltage range between 0 and 10VDC. Note: The dipswitch on the device must be set to match the configuration!
		MILLIAMP_0_TO_20	Input current range between 0 and 20mA. Note: The dipswitch on the device must be set to match the configuration!
	OID	1.3.6.1.4.1.3181.10.6.1.106.3.1.34 (smartIoConfigAin3SensorType)	
ain3_raw_min	Defines the lowest raw value data point.		
	Value	String, max. 8 characters.	
	OID	1.3.6.1.4.1.3181.10.6.1.106.3.1.35 (smartIoConfigAin3RawMin)	
ain3_raw_max	Defines the highest raw value data point.		
	Value	String, max. 8 characters.	
	OID	1.3.6.1.4.1.3181.10.6.1.106.3.1.36 (smartIoConfigAin3RawMax)	
ain3_scaled_min	Defines the lower scaled value at the lower raw value data point.		
	Value	String, max. 8 characters.	
	OID	1.3.6.1.4.1.3181.10.6.1.106.3.1.37 (smartIoConfigAin3ScaledMin)	
ain3_scaled_max	Defines the scaled value at the max raw value data point.		
	Value	String, max. 8 characters.	
	OID	1.3.6.1.4.1.3181.10.6.1.106.3.1.38 (smartIoConfigAin3ScaledMax)	
ain3_num_averaged_values	Number of measured values used to calculate an average which then becomes the reported value used in the system.		
	Value	Number in range 1-100	
	OID	1.3.6.1.4.1.3181.10.6.1.106.3.1.39 (smartIoConfigAin3NumAveragedValues)	
ain3_filter_time	Time in seconds used to further filter the already averaged values. Set to 0 to disable filter function.		
	Value	Number in range 0-10	
	OID	1.3.6.1.4.1.3181.10.6.1.106.3.1.40 (smartIoConfigAin3FilterTime)	

©2026 MICROSENS GmbH & Co. KG - Hamm/Germany - www.microsens.com

ain3_update_delta	Defines how much the input value can deviate before a value change is reported. An absolute value is expected. **Value** String, max. 8 characters. **OID** 1.3.6.1.4.1.3181.10.6.1.106.3.1.41 (smartIoConfigAin3UpdateDelta)
ain3_transformation	May be used to transform the input value to another format. Syntax: value=text, value=text,.. Or calculations: =$*10 Example C to F: =($*1.8)+32. Use # to append a unit to the value. Also in combination with calculation like: $/1000#mW. For more options please refer to separate documentation. **Value** String, max. 128 characters. **OID** 1.3.6.1.4.1.3181.10.6.1.106.3.1.42 (smartIoConfigAin3Transformation)
ain4_attribute	This defines the attribute with which it will register the analog input 4 to the system. Use attribute:instance syntax to define an instance id. **Value** String, max. 32 characters. **OID** 1.3.6.1.4.1.3181.10.6.1.106.3.1.43 (smartIoConfigAin4Attribute)
ain4_sensor_type	Defines the sensor connected to the analog input 4. **Values** *UNUSED* Input is not connected *VOLT_0_TO_10* Input voltage range between 0 and 10VDC. Note: The dipswitch on the device must be set to match the configuration! *MILLIAMP_0_TO_20* Input current range between 0 and 20mA. Note: The dipswitch on the device must be set to match the configuration! **OID** 1.3.6.1.4.1.3181.10.6.1.106.3.1.44 (smartIoConfigAin4SensorType)
ain4_raw_min	Defines the lowest raw value data point. **Value** String, max. 8 characters. **OID** 1.3.6.1.4.1.3181.10.6.1.106.3.1.45 (smartIoConfigAin4RawMin)
ain4_raw_max	Defines the highest raw value data point. **Value** String, max. 8 characters. **OID** 1.3.6.1.4.1.3181.10.6.1.106.3.1.46 (smartIoConfigAin4RawMax)
ain4_scaled_min	Defines the lower scaled value at the lower raw value data point. **Value** String, max. 8 characters. **OID** 1.3.6.1.4.1.3181.10.6.1.106.3.1.47 (smartIoConfigAin4ScaledMin)

©2026 MICROSENS GmbH & Co. KG - Hamm/Germany - www.microsens.com

ain4_scaled_max	Defines the scaled value at the max raw value data point. **Value** String, max. 8 characters. **OID** 1.3.6.1.4.1.3181.10.6.1.106.3.1.48 (smartIoConfigAin4ScaledMax)
ain4_num_averaged_values	Number of measured values used to calculate an average which then becomes the reported value used in the system. **Value** Number in range 1-100 **OID** 1.3.6.1.4.1.3181.10.6.1.106.3.1.49 (smartIoConfigAin4NumAveragedValues)
ain4_filter_time	Time in seconds used to further filter the already averaged values. Set to 0 to disable filter function. **Value** Number in range 0-10 **OID** 1.3.6.1.4.1.3181.10.6.1.106.3.1.50 (smartIoConfigAin4FilterTime)
ain4_update_delta	Defines how much the input value can deviate before a value change is reported. An absolute value is expected. **Value** String, max. 8 characters. **OID** 1.3.6.1.4.1.3181.10.6.1.106.3.1.51 (smartIoConfigAin4UpdateDelta)
ain4_transformation	May be used to transform the input value to another format. Syntax: value=text, value=text,.. Or calculations: =$*10 Example C to F: =($*1.8)+32. Use # to append a unit to the value. Also in combination with calculation like: $/1000#mW. For more options please refer to separate documentation. **Value** String, max. 128 characters. **OID** 1.3.6.1.4.1.3181.10.6.1.106.3.1.52 (smartIoConfigAin4Transformation)
din1_mode	Used to enable the digital input 1. **Values** *UNUSED* Input is not connected *ENABLED* Input is used and reporting **OID** 1.3.6.1.4.1.3181.10.6.1.106.3.1.53 (smartIoConfigDin1Mode)
din1_attribute	This defines the attribute with which it will register the digital input 1 to the system. If left blank, the digital input is not reported (disabled). Use attribute:instance syntax to define an instance id. **Value** String, max. 32 characters. **OID** 1.3.6.1.4.1.3181.10.6.1.106.3.1.54 (smartIoConfigDin1Attribute)

©2026 MICROSENS GmbH & Co. KG - Hamm/Germany - www.microsens.com

din1_transformation	May be used to transform the input value to another format. Syntax: 0=text, 1=text. Or 0=0,1=100 to make the digital value toggle between 0 and 100. **Value** String, max. 32 characters. **OID** 1.3.6.1.4.1.3181.10.6.1.106.3.1.55 (smartIoConfigDin1Transformation)
din1_debounce_time	Defines for how long a signal must be stable before being recognized as valid. Value in milliseconds. **Value** Number in range 0-1000 **OID** 1.3.6.1.4.1.3181.10.6.1.106.3.1.56 (smartIoConfigDin1DebounceTime)
din2_mode	Used to enable the digital input 2. **Values** *UNUSED* Input is not connected *ENABLED* Input is used and reporting **OID** 1.3.6.1.4.1.3181.10.6.1.106.3.1.57 (smartIoConfigDin2Mode)
din2_attribute	This defines the attribute with which it will register the digital input 2 to the system. If left blank, the digital input is not reported (disabled). Use attribute:instance syntax to define an instance id. **Value** String, max. 32 characters. **OID** 1.3.6.1.4.1.3181.10.6.1.106.3.1.58 (smartIoConfigDin2Attribute)
din2_transformation	May be used to transform the input value to another format. Syntax: 0=text, 1=text. Or 0=0,1=100 to make the digital value toggle between 0 and 100. **Value** String, max. 32 characters. **OID** 1.3.6.1.4.1.3181.10.6.1.106.3.1.59 (smartIoConfigDin2Transformation)
din2_debounce_time	Defines for how long a signal must be stable before being recognized as valid. Value in milliseconds. **Value** Number in range 0-1000 **OID** 1.3.6.1.4.1.3181.10.6.1.106.3.1.60 (smartIoConfigDin2DebounceTime)
din3_mode	Used to enable the digital input 3. **Values** *UNUSED* Input is not connected *ENABLED* Input is used and reporting **OID** 1.3.6.1.4.1.3181.10.6.1.106.3.1.61 (smartIoConfigDin3Mode)

©2026 MICROSENS GmbH & Co. KG - Hamm/Germany - www.microsens.com

din3_attribute	This defines the attribute with which it will register the digital input 3 to the system. If left blank, the digital input is not reported (disabled). Use attribute:instance syntax to define an instance id. **Value** String, max. 32 characters. **OID** 1.3.6.1.4.1.3181.10.6.1.106.3.1.62 (smartIoConfigDin3Attribute)
din3_transformation	May be used to transform the input value to another format. Syntax: 0=text, 1=text. Or 0=0,1=100 to make the digital value toggle between 0 and 100. **Value** String, max. 32 characters. **OID** 1.3.6.1.4.1.3181.10.6.1.106.3.1.63 (smartIoConfigDin3Transformation)
din3_debounce_time	Defines for how long a signal must be stable before being recognized as valid. Value in milliseconds. **Value** Number in range 0-1000 **OID** 1.3.6.1.4.1.3181.10.6.1.106.3.1.64 (smartIoConfigDin3DebounceTime)
din4_mode	Used to enable the digital input 4. **Values** *UNUSED* Input is not connected *ENABLED* Input is used and reporting **OID** 1.3.6.1.4.1.3181.10.6.1.106.3.1.65 (smartIoConfigDin4Mode)
din4_attribute	This defines the attribute with which it will register the digital input 4 to the system. If left blank, the digital input is not reported (disabled). Use attribute:instance syntax to define an instance id. **Value** String, max. 32 characters. **OID** 1.3.6.1.4.1.3181.10.6.1.106.3.1.66 (smartIoConfigDin4Attribute)
din4_transformation	May be used to transform the input value to another format. Syntax: 0=text, 1=text. Or 0=0,1=100 to make the digital value toggle between 0 and 100. **Value** String, max. 32 characters. **OID** 1.3.6.1.4.1.3181.10.6.1.106.3.1.67 (smartIoConfigDin4Transformation)
din4_debounce_time	Defines for how long a signal must be stable before being recognized as valid. Value in milliseconds. **Value** Number in range 0-1000 **OID** 1.3.6.1.4.1.3181.10.6.1.106.3.1.68 (smartIoConfigDin4DebounceTime)

©2026 MICROSENS GmbH & Co. KG - Hamm/Germany - www.microsens.com

aout1_attribute	This defines the attribute with which it will register the analog output 1 to the system. If left blank, this analog output cannot not be used. Use attribute:instance syntax to define an instance id. **Value** String, max. 32 characters. **OID** 1.3.6.1.4.1.3181.10.6.1.106.3.1.69 (smartIoConfigAout1Attribute)
aout1_mode	Defines the output mode of digital output 1. **Values** *UNUSED* Output is not connected *VOLT_0_TO_10* Output voltage range between 0 and 10VDC *MILLIAMP_0_TO_20* Output current range between 0 and 20mA *RAW* Output is used **OID** 1.3.6.1.4.1.3181.10.6.1.106.3.1.70 (smartIoConfigAout1Mode)
aout1_transformation	May be used to transform a possible non compliant output value (of the actor group) into a compliant value. Note this transformation takes place before the scaling parameter are applied. Syntax: text=value, text=value,.. Or calculations like: =$/1000 For more options please refer to separate documentation. **Value** String, max. 128 characters. **OID** 1.3.6.1.4.1.3181.10.6.1.106.3.1.71 (smartIoConfigAout1Transformation)
aout1_raw_min	Defines the lowest raw value data point. **Value** String, max. 8 characters. **OID** 1.3.6.1.4.1.3181.10.6.1.106.3.1.72 (smartIoConfigAout1RawMin)
aout1_raw_max	Defines the highest raw value data point. **Value** String, max. 8 characters. **OID** 1.3.6.1.4.1.3181.10.6.1.106.3.1.73 (smartIoConfigAout1RawMax)
aout1_scaled_min	Defines the lower scaled value at the lower raw value data point. **Value** String, max. 8 characters. **OID** 1.3.6.1.4.1.3181.10.6.1.106.3.1.74 (smartIoConfigAout1ScaledMin)
aout1_scaled_max	Defines the scaled value at the max raw value data point. **Value** String, max. 8 characters. **OID** 1.3.6.1.4.1.3181.10.6.1.106.3.1.75 (smartIoConfigAout1ScaledMax)

©2026 MICROSENS GmbH & Co. KG - Hamm/Germany - www.microsens.com

aout2_attribute	This defines the attribute with which it will register the analog output 2 to the system. If left blank, this analog output cannot not be used. Use attribute:instance syntax to define an instance id. **Value** String, max. 32 characters. **OID** 1.3.6.1.4.1.3181.10.6.1.106.3.1.76 (smartIoConfigAout2Attribute)
aout2_mode	Defines the output mode of digital output 1. **Values** *UNUSED* Output is not connected *VOLT_0_TO_10* Output voltage range between 0 and 10VDC *MILLIAMP_0_TO_20* Output current range between 0 and 20mA *RAW* Output is used **OID** 1.3.6.1.4.1.3181.10.6.1.106.3.1.77 (smartIoConfigAout2Mode)
aout2_transformation	May be used to transform a possible non compliant output value (of the actor group) into a compliant value. Note this transformation takes place before the scaling parameter are applied. Syntax: text=value, text=value,.. Or calculations like: =$/1000 For more options please refer to separate documentation. **Value** String, max. 128 characters. **OID** 1.3.6.1.4.1.3181.10.6.1.106.3.1.78 (smartIoConfigAout2Transformation)
aout2_raw_min	Defines the lowest raw value data point. **Value** String, max. 8 characters. **OID** 1.3.6.1.4.1.3181.10.6.1.106.3.1.79 (smartIoConfigAout2RawMin)
aout2_raw_max	Defines the highest raw value data point. **Value** String, max. 8 characters. **OID** 1.3.6.1.4.1.3181.10.6.1.106.3.1.80 (smartIoConfigAout2RawMax)
aout2_scaled_min	Defines the lower scaled value at the lower raw value data point. **Value** String, max. 8 characters. **OID** 1.3.6.1.4.1.3181.10.6.1.106.3.1.81 (smartIoConfigAout2ScaledMin)
aout2_scaled_max	Defines the scaled value at the max raw value data point. **Value** String, max. 8 characters. **OID** 1.3.6.1.4.1.3181.10.6.1.106.3.1.82 (smartIoConfigAout2ScaledMax)

©2026 MICROSENS GmbH & Co. KG - Hamm/Germany - www.microsens.com

dout1_attribute	This defines the attribute with which it will register the digital output 1 to the system. If left blank, the output cannot not be used. Use attribute:instance syntax to define an instance id. **Value** String, max. 32 characters. **OID** 1.3.6.1.4.1.3181.10.6.1.106.3.1.83 (smartIoConfigDout1Attribute)
dout1_mode	Defines the output mode of digital output 1. **Values** *UNUSED* Output is not connected *DIGITAL* Output is switch on or off *PWM* Output uses pulse width modulation **OID** 1.3.6.1.4.1.3181.10.6.1.106.3.1.84 (smartIoConfigDout1Mode)
dout1_pwm_frequency	When PWM mode is selected, this parameter defines the PWM frequency in Hz.IMPORTANT: This frequency is used for both dout1 and dout2 when in PWM mode. **Value** Number in range 0-10000000 **OID** 1.3.6.1.4.1.3181.10.6.1.106.3.1.85 (smartIoConfigDout1PwmFrequency)
dout1_transformation	May be used to transform a textual input to acceptable digital values. Example: OFF=0, ON=1. Or to accept other numeric ranges: 0=0,100=1. **Value** String, max. 32 characters. **OID** 1.3.6.1.4.1.3181.10.6.1.106.3.1.86 (smartIoConfigDout1Transformation)
dout2_attribute	This defines the attribute with which it will register the digital output 2 to the system. If left blank, the output cannot not be used. Use attribute:instance syntax to define an instance id. **Value** String, max. 32 characters. **OID** 1.3.6.1.4.1.3181.10.6.1.106.3.1.87 (smartIoConfigDout2Attribute)
dout2_mode	Defines the output mode of digital output 2. **Values** *UNUSED* Output is not connected *DIGITAL* Output is switch on or off *PWM* Output uses pulse width modulation **OID** 1.3.6.1.4.1.3181.10.6.1.106.3.1.88 (smartIoConfigDout2Mode)
dout2_pwm_frequency	This parameter currently is not in use. The frequency of dout1 is used instead. ATTENTION: Not implemented. **Value** Number in range 0-10000000 **OID** 1.3.6.1.4.1.3181.10.6.1.106.3.1.89 (smartIoConfigDout2PwmFrequency)

©2026 MICROSENS GmbH & Co. KG - Hamm/Germany - www.microsens.com

dout2_transformation	May be used to transform a textual input to acceptable digital values. Example: OFF=0, ON=1. Or to accept other numeric ranges: 0=0,100=1. **Value** String, max. 32 characters. **OID** 1.3.6.1.4.1.3181.10.6.1.106.3.1.90 (smartIoConfigDout2Transformation)
connection_timeout	When the communication between the host system and the controller cannot be established in the configured time, an automatic controller restart is initiated. A value of 0 disables this function. Value in seconds. **Value** Number in range 0-5000 **OID** 1.3.6.1.4.1.3181.10.6.1.106.3.1.91 (smartIoConfigConnectionTimeout)
controller_mode	When set to other then normal additional test or debug information are provided. **Values** *NORMAL* Normal operation mode; *TEST* Test mode; *DEBUG* Debug mode displays additional infos **OID** 1.3.6.1.4.1.3181.10.6.1.106.3.1.92 (smartIoConfigControllerMode)
manual_get_input	May be used to manually read an input value. Syntax example: manual_get_input = ain2 [R]. Append R or raw for unprocessed value. Otherwise the scaled input is displayed. **Action** Excecute command with parameter string max. 32 characters. **OID** 1.3.6.1.4.1.3181.10.6.1.106.3.1.93 (smartIoConfigManualGetInput)
manual_set_output	May be used to manually force an output value. Syntax example: manual_set_output = aout1 50 [raw]. Append raw if the value should be treated as a raw, unscaled value. **Action** Excecute command with parameter string max. 32 characters. **OID** 1.3.6.1.4.1.3181.10.6.1.106.3.1.94 (smartIoConfigManualSetOutput)
read_command	May be used to manually read an internal controller value. Syntax: read_command = parameter. **Action** Excecute command with parameter string max. 32 characters. **OID** 1.3.6.1.4.1.3181.10.6.1.106.3.1.95 (smartIoConfigReadCommand)

©2026 MICROSENS GmbH & Co. KG - Hamm/Germany - www.microsens.com

write_command	May be used to manually write an internal controller value. Syntax: write_command = parameter value. **Action** Excecute command with parameter string max. 128 characters. **OID** 1.3.6.1.4.1.3181.10.6.1.106.3.1.96 (smartIoConfigWriteCommand)

Group	**smart_digital_io_config**, dynamical size
Path	Device.Controller.smart_digital_io_config
Description	Add elements as required for the number of used controllers of this type.

name	Unique name must precisely match the device name specified under Device.SmartOffice.device_config.device_name for a device of product_type = SMART_IO_CONTROLLER. **Value** String, max. 31 characters. **OID** 1.3.6.1.4.1.3181.10.6.1.106.4.1.2 (smartDigitalIoConfigName)
din1_mode	Used to enable the digital input 1. **Values** enabled, disabled **OID** 1.3.6.1.4.1.3181.10.6.1.106.4.1.3 (smartDigitalIoConfigDin1Mode)
din1_attribute	This defines the attribute with which it will register the input to the system. Use attribute:instance syntax to define an instance id. **Value** String, max. 32 characters. **OID** 1.3.6.1.4.1.3181.10.6.1.106.4.1.4 (smartDigitalIoConfigDin1Attribute)
din1_transformation	May be used to transform the input value to another format. Syntax: 0=text, 1=text. Or 0=0,1=100 to make the digital value toggle between 0 and 100. **Value** String, max. 32 characters. **OID** 1.3.6.1.4.1.3181.10.6.1.106.4.1.5 (smartDigitalIoConfigDin1Transformation)
din1_debounce_time	Defines for how long a signal must be stable before being recognized as valid. Value in milliseconds. **Value** Number in range 0-1000 **OID** 1.3.6.1.4.1.3181.10.6.1.106.4.1.6 (smartDigitalIoConfigDin1DebounceTime)

©2026 MICROSENS GmbH & Co. KG - Hamm/Germany - www.microsens.com

din2_mode	Used to enable the digital input 2. **Values** enabled, disabled **OID** 1.3.6.1.4.1.3181.10.6.1.106.4.1.7 (smartDigitalIoConfigDin2Mode)
din2_attribute	This defines the attribute with which it will register the input to the system. Use attribute:instance syntax to define an instance id. **Value** String, max. 32 characters. **OID** 1.3.6.1.4.1.3181.10.6.1.106.4.1.8 (smartDigitalIoConfigDin2Attribute)
din2_transformation	May be used to transform the input value to another format. Syntax: 0=text, 1=text. Or 0=0,1=100 to make the digital value toggle between 0 and 100. **Value** String, max. 32 characters. **OID** 1.3.6.1.4.1.3181.10.6.1.106.4.1.9 (smartDigitalIoConfigDin2Transformation)
din2_debounce_time	Defines for how long a signal must be stable before being recognized as valid. Value in milliseconds. **Value** Number in range 0-1000 **OID** 1.3.6.1.4.1.3181.10.6.1.106.4.1.10 (smartDigitalIoConfigDin2DebounceTime)
din3_mode	Used to enable the digital input 3. **Values** enabled, disabled **OID** 1.3.6.1.4.1.3181.10.6.1.106.4.1.11 (smartDigitalIoConfigDin3Mode)
din3_attribute	This defines the attribute with which it will register the input to the system. Use attribute:instance syntax to define an instance id. **Value** String, max. 32 characters. **OID** 1.3.6.1.4.1.3181.10.6.1.106.4.1.12 (smartDigitalIoConfigDin3Attribute)
din3_transformation	May be used to transform the input value to another format. Syntax: 0=text, 1=text. Or 0=0,1=100 to make the digital value toggle between 0 and 100. **Value** String, max. 32 characters. **OID** 1.3.6.1.4.1.3181.10.6.1.106.4.1.13 (smartDigitalIoConfigDin3Transformation)
din3_debounce_time	Defines for how long a signal must be stable before being recognized as valid. Value in milliseconds. **Value** Number in range 0-1000 **OID** 1.3.6.1.4.1.3181.10.6.1.106.4.1.14 (smartDigitalIoConfigDin3DebounceTime)

©2026 MICROSENS GmbH & Co. KG - Hamm/Germany - www.microsens.com

din4_mode	Used to enable the digital input 4. **Values** enabled, disabled **OID** 1.3.6.1.4.1.3181.10.6.1.106.4.1.15 (smartDigitalIoConfigDin4Mode)
din4_attribute	This defines the attribute with which it will register the input to the system. Use attribute:instance syntax to define an instance id. **Value** String, max. 32 characters. **OID** 1.3.6.1.4.1.3181.10.6.1.106.4.1.16 (smartDigitalIoConfigDin4Attribute)
din4_transformation	May be used to transform the input value to another format. Syntax: 0=text, 1=text. Or 0=0,1=100 to make the digital value toggle between 0 and 100. **Value** String, max. 32 characters. **OID** 1.3.6.1.4.1.3181.10.6.1.106.4.1.17 (smartDigitalIoConfigDin4Transformation)
din4_debounce_time	Defines for how long a signal must be stable before being recognized as valid. Value in milliseconds. **Value** Number in range 0-1000 **OID** 1.3.6.1.4.1.3181.10.6.1.106.4.1.18 (smartDigitalIoConfigDin4DebounceTime)
din5_mode	Used to enable the digital input 5. **Values** enabled, disabled **OID** 1.3.6.1.4.1.3181.10.6.1.106.4.1.19 (smartDigitalIoConfigDin5Mode)
din5_attribute	This defines the attribute with which it will register the input to the system. Use attribute:instance syntax to define an instance id. **Value** String, max. 32 characters. **OID** 1.3.6.1.4.1.3181.10.6.1.106.4.1.20 (smartDigitalIoConfigDin5Attribute)
din5_transformation	May be used to transform the input value to another format. Syntax: 0=text, 1=text. Or 0=0,1=100 to make the digital value toggle between 0 and 100. **Value** String, max. 32 characters. **OID** 1.3.6.1.4.1.3181.10.6.1.106.4.1.21 (smartDigitalIoConfigDin5Transformation)
din5_debounce_time	Defines for how long a signal must be stable before being recognized as valid. Value in milliseconds. **Value** Number in range 0-1000 **OID** 1.3.6.1.4.1.3181.10.6.1.106.4.1.22 (smartDigitalIoConfigDin5DebounceTime)

©2026 MICROSENS GmbH & Co. KG - Hamm/Germany - www.microsens.com

din6_mode	Used to enable the digital input 6. **Values** enabled, disabled **OID** 1.3.6.1.4.1.3181.10.6.1.106.4.1.23 (smartDigitalIoConfigDin6Mode)
din6_attribute	This defines the attribute with which it will register the input to the system. Use attribute:instance syntax to define an instance id. **Value** String, max. 32 characters. **OID** 1.3.6.1.4.1.3181.10.6.1.106.4.1.24 (smartDigitalIoConfigDin6Attribute)
din6_transformation	May be used to transform the input value to another format. Syntax: 0=text, 1=text. Or 0=0,1=100 to make the digital value toggle between 0 and 100. **Value** String, max. 32 characters. **OID** 1.3.6.1.4.1.3181.10.6.1.106.4.1.25 (smartDigitalIoConfigDin6Transformation)
din6_debounce_time	Defines for how long a signal must be stable before being recognized as valid. Value in milliseconds. **Value** Number in range 0-1000 **OID** 1.3.6.1.4.1.3181.10.6.1.106.4.1.26 (smartDigitalIoConfigDin6DebounceTime)
din7_mode	Used to enable the digital input 7. **Values** enabled, disabled **OID** 1.3.6.1.4.1.3181.10.6.1.106.4.1.27 (smartDigitalIoConfigDin7Mode)
din7_attribute	This defines the attribute with which it will register the input to the system. Use attribute:instance syntax to define an instance id. **Value** String, max. 32 characters. **OID** 1.3.6.1.4.1.3181.10.6.1.106.4.1.28 (smartDigitalIoConfigDin7Attribute)
din7_transformation	May be used to transform the input value to another format. Syntax: 0=text, 1=text. Or 0=0,1=100 to make the digital value toggle between 0 and 100. **Value** String, max. 32 characters. **OID** 1.3.6.1.4.1.3181.10.6.1.106.4.1.29 (smartDigitalIoConfigDin7Transformation)
din7_debounce_time	Defines for how long a signal must be stable before being recognized as valid. Value in milliseconds. **Value** Number in range 0-1000 **OID** 1.3.6.1.4.1.3181.10.6.1.106.4.1.30 (smartDigitalIoConfigDin7DebounceTime)

©2026 MICROSENS GmbH & Co. KG - Hamm/Germany - www.microsens.com

din8_mode	Used to enable the digital input 8. **Values** enabled, disabled **OID** 1.3.6.1.4.1.3181.10.6.1.106.4.1.31 (smartDigitalIoConfigDin8Mode)
din8_attribute	This defines the attribute with which it will register the input to the system. Use attribute:instance syntax to define an instance id. **Value** String, max. 32 characters. **OID** 1.3.6.1.4.1.3181.10.6.1.106.4.1.32 (smartDigitalIoConfigDin8Attribute)
din8_transformation	May be used to transform the input value to another format. Syntax: 0=text, 1=text. Or 0=0,1=100 to make the digital value toggle between 0 and 100. **Value** String, max. 32 characters. **OID** 1.3.6.1.4.1.3181.10.6.1.106.4.1.33 (smartDigitalIoConfigDin8Transformation)
din8_debounce_time	Defines for how long a signal must be stable before being recognized as valid. Value in milliseconds. **Value** Number in range 0-1000 **OID** 1.3.6.1.4.1.3181.10.6.1.106.4.1.34 (smartDigitalIoConfigDin8DebounceTime)
din9_mode	Used to enable the digital input 9. **Values** enabled, disabled **OID** 1.3.6.1.4.1.3181.10.6.1.106.4.1.35 (smartDigitalIoConfigDin9Mode)
din9_attribute	This defines the attribute with which it will register the input to the system. Use attribute:instance syntax to define an instance id. **Value** String, max. 32 characters. **OID** 1.3.6.1.4.1.3181.10.6.1.106.4.1.36 (smartDigitalIoConfigDin9Attribute)
din9_transformation	May be used to transform the input value to another format. Syntax: 0=text, 1=text. Or 0=0,1=100 to make the digital value toggle between 0 and 100. **Value** String, max. 32 characters. **OID** 1.3.6.1.4.1.3181.10.6.1.106.4.1.37 (smartDigitalIoConfigDin9Transformation)
din9_debounce_time	Defines for how long a signal must be stable before being recognized as valid. Value in milliseconds. **Value** Number in range 0-1000 **OID** 1.3.6.1.4.1.3181.10.6.1.106.4.1.38 (smartDigitalIoConfigDin9DebounceTime)

©2026 MICROSENS GmbH & Co. KG - Hamm/Germany - www.microsens.com

din10_mode	Used to enable the digital input 10. **Values** enabled, disabled **OID** 1.3.6.1.4.1.3181.10.6.1.106.4.1.39 (smartDigitalIoConfigDin10Mode)
din10_attribute	This defines the attribute with which it will register the input to the system. Use attribute:instance syntax to define an instance id. **Value** String, max. 32 characters. **OID** 1.3.6.1.4.1.3181.10.6.1.106.4.1.40 (smartDigitalIoConfigDin10Attribute)
din10_transformation	May be used to transform the input value to another format. Syntax: 0=text, 1=text. Or 0=0,1=100 to make the digital value toggle between 0 and 100. **Value** String, max. 32 characters. **OID** 1.3.6.1.4.1.3181.10.6.1.106.4.1.41 (smartDigitalIoConfigDin10Transformation)
din10_debounce_time	Defines for how long a signal must be stable before being recognized as valid. Value in milliseconds. **Value** Number in range 0-1000 **OID** 1.3.6.1.4.1.3181.10.6.1.106.4.1.42 (smartDigitalIoConfigDin10DebounceTime)
dout1_mode	Used to enable digital output 1. **Values** enabled, disabled **OID** 1.3.6.1.4.1.3181.10.6.1.106.4.1.43 (smartDigitalIoConfigDout1Mode)
dout1_attribute	Defines the attribute with which this digital output registered in the system. Use attribute:instance syntax to define an instance id. **Value** String, max. 32 characters. **OID** 1.3.6.1.4.1.3181.10.6.1.106.4.1.44 (smartDigitalIoConfigDout1Attribute)
dout1_transformation	May be used to transform a textual input to acceptable digital values. Example: OFF=0, ON=1. Or to accept other numeric ranges: 0=0,100=1. **Value** String, max. 32 characters. **OID** 1.3.6.1.4.1.3181.10.6.1.106.4.1.45 (smartDigitalIoConfigDout1Transformation)
dout2_mode	Used to enable digital output 2. **Values** enabled, disabled **OID** 1.3.6.1.4.1.3181.10.6.1.106.4.1.46 (smartDigitalIoConfigDout2Mode)

©2026 MICROSENS GmbH & Co. KG - Hamm/Germany - www.microsens.com

dout2_attribute	Defines the attribute with which this digital output registered in the system. Use attribute:instance syntax to define an instance id. **Value** String, max. 32 characters. **OID** 1.3.6.1.4.1.3181.10.6.1.106.4.1.47 (smartDigitalIoConfigDout2Attribute)
dout2_transformation	May be used to transform a textual input to acceptable digital values. Example: OFF=0, ON=1. Or to accept other numeric ranges: 0=0,100=1. **Value** String, max. 32 characters. **OID** 1.3.6.1.4.1.3181.10.6.1.106.4.1.48 (smartDigitalIoConfigDout2Transformation)
dout3_mode	Used to enable digital output 3. **Values** enabled, disabled **OID** 1.3.6.1.4.1.3181.10.6.1.106.4.1.49 (smartDigitalIoConfigDout3Mode)
dout3_attribute	Defines the attribute with which this digital output registered in the system. Use attribute:instance syntax to define an instance id. **Value** String, max. 32 characters. **OID** 1.3.6.1.4.1.3181.10.6.1.106.4.1.50 (smartDigitalIoConfigDout3Attribute)
dout3_transformation	May be used to transform a textual input to acceptable digital values. Example: OFF=0, ON=1. Or to accept other numeric ranges: 0=0,100=1. **Value** String, max. 32 characters. **OID** 1.3.6.1.4.1.3181.10.6.1.106.4.1.51 (smartDigitalIoConfigDout3Transformation)
dout4_mode	Used to enable digital output 4. **Values** enabled, disabled **OID** 1.3.6.1.4.1.3181.10.6.1.106.4.1.52 (smartDigitalIoConfigDout4Mode)
dout4_attribute	Defines the attribute with which this digital output registered in the system. Use attribute:instance syntax to define an instance id. **Value** String, max. 32 characters. **OID** 1.3.6.1.4.1.3181.10.6.1.106.4.1.53 (smartDigitalIoConfigDout4Attribute)
dout4_transformation	May be used to transform a textual input to acceptable digital values. Example: OFF=0, ON=1. Or to accept other numeric ranges: 0=0,100=1. **Value** String, max. 32 characters. **OID** 1.3.6.1.4.1.3181.10.6.1.106.4.1.54 (smartDigitalIoConfigDout4Transformation)

©2026 MICROSENS GmbH & Co. KG - Hamm/Germany - www.microsens.com

dout5_mode	Used to enable digital output 5. **Values** enabled, disabled **OID** 1.3.6.1.4.1.3181.10.6.1.106.4.1.55 (smartDigitalIoConfigDout5Mode)
dout5_attribute	Defines the attribute with which this digital output registered in the system. Use attribute:instance syntax to define an instance id. **Value** String, max. 32 characters. **OID** 1.3.6.1.4.1.3181.10.6.1.106.4.1.56 (smartDigitalIoConfigDout5Attribute)
dout5_transformation	May be used to transform a textual input to acceptable digital values. Example: OFF=0, ON=1. Or to accept other numeric ranges: 0=0,100=1. **Value** String, max. 32 characters. **OID** 1.3.6.1.4.1.3181.10.6.1.106.4.1.57 (smartDigitalIoConfigDout5Transformation)
dout6_mode	Used to enable digital output 6. **Values** enabled, disabled **OID** 1.3.6.1.4.1.3181.10.6.1.106.4.1.58 (smartDigitalIoConfigDout6Mode)
dout6_attribute	Defines the attribute with which this digital output registered in the system. Use attribute:instance syntax to define an instance id. **Value** String, max. 32 characters. **OID** 1.3.6.1.4.1.3181.10.6.1.106.4.1.59 (smartDigitalIoConfigDout6Attribute)
dout6_transformation	May be used to transform a textual input to acceptable digital values. Example: OFF=0, ON=1. Or to accept other numeric ranges: 0=0,100=1. **Value** String, max. 32 characters. **OID** 1.3.6.1.4.1.3181.10.6.1.106.4.1.60 (smartDigitalIoConfigDout6Transformation)
dout7_mode	Used to enable digital output 7. **Values** enabled, disabled **OID** 1.3.6.1.4.1.3181.10.6.1.106.4.1.61 (smartDigitalIoConfigDout7Mode)
dout7_attribute	Defines the attribute with which this digital output registered in the system. Use attribute:instance syntax to define an instance id. **Value** String, max. 32 characters. **OID** 1.3.6.1.4.1.3181.10.6.1.106.4.1.62 (smartDigitalIoConfigDout7Attribute)

©2026 MICROSENS GmbH & Co. KG - Hamm/Germany - www.microsens.com

dout7_transformation	May be used to transform a textual input to acceptable digital values. Example: OFF=0, ON=1. Or to accept other numeric ranges: 0=0,100=1. **Value** String, max. 32 characters. **OID** 1.3.6.1.4.1.3181.10.6.1.106.4.1.63 (smartDigitalIoConfigDout7Transformation)
dout8_mode	Used to enable digital output 8. **Values** enabled, disabled **OID** 1.3.6.1.4.1.3181.10.6.1.106.4.1.64 (smartDigitalIoConfigDout8Mode)
dout8_attribute	Defines the attribute with which this digital output registered in the system. Use attribute:instance syntax to define an instance id. **Value** String, max. 32 characters. **OID** 1.3.6.1.4.1.3181.10.6.1.106.4.1.65 (smartDigitalIoConfigDout8Attribute)
dout8_transformation	May be used to transform a textual input to acceptable digital values. Example: OFF=0, ON=1. Or to accept other numeric ranges: 0=0,100=1. **Value** String, max. 32 characters. **OID** 1.3.6.1.4.1.3181.10.6.1.106.4.1.66 (smartDigitalIoConfigDout8Transformation)
connection_timeout	When the communication between the host system and the controller cannot be established in the configured time, an automatic controller restart is initiated. A value of 0 disables this function. Value in seconds. **Value** Number in range 0-5000 **OID** 1.3.6.1.4.1.3181.10.6.1.106.4.1.67 (smartDigitalIoConfigConnectionTimeout)
controller_mode	When set to other then normal additional test or debug information are provided. **Values** *NORMAL* Normal operation mode *TEST* Test mode *DEBUG* Debug mode displays additional infos **OID** 1.3.6.1.4.1.3181.10.6.1.106.4.1.68 (smartDigitalIoConfigControllerMode)
manual_get_value	May be used to manually read an input value. Syntax example: manual_get_input = din2 [R]. Append R or raw for unprocessed value. Otherwise the transformed input is displayed. **Action** Excecute command with parameter string max. 32 characters. **OID** 1.3.6.1.4.1.3181.10.6.1.106.4.1.69 (smartDigitalIoConfigManualGetValue)

©2026 MICROSENS GmbH & Co. KG - Hamm/Germany - www.microsens.com

manual_set_value	May be used to manually force an output value. Syntax example: manual_set_output = dout1 1. **Action** Excecute command with parameter string max. 32 characters. **OID** 1.3.6.1.4.1.3181.10.6.1.106.4.1.70 (smartDigitalIoConfigManualSetValue)
read_command	May be used to manually read an internal controller value. Syntax: read_command = parameter. **Action** Excecute command with parameter string max. 32 characters. **OID** 1.3.6.1.4.1.3181.10.6.1.106.4.1.71 (smartDigitalIoConfigReadCommand)
write_command	May be used to manually write an internal controller value. Syntax: write_command = parameter value. **Action** Excecute command with parameter string max. 128 characters. **OID** 1.3.6.1.4.1.3181.10.6.1.106.4.1.72 (smartDigitalIoConfigWriteCommand)

©2026 MICROSENS GmbH & Co. KG - Hamm/Germany - www.microsens.com

26 Wifi

26.1 Key Features

Micro Access Point Support

Support for Wifi Micro Access Point. Configure wireless parameter such as SSID and DHCP server address range. Note: the WIFI feature may not be enabled on your device.

The access point is suitable for SmartOffice connection of module devices. It may also be used as Internet access device.

Firewall

The Micro Access Point supports firewalling unsing configurable incoming and outgoing access control lists (ACL).

Access control list can be used to limit the wireless traffic to predetermined addresses.

Firmware Upgrade

The Micro Access Point firmware is part of tjhe general G6 firmware package and can easily be updated from there.

This ensures that acess point and G6 software always match up.

26.2 Functional Description

Wifi

Wireless Access Point setup and status parameters.

> ***INFO:*** *This feature requires additional MICROSENS Access Point hardware connected to the G6 device.*

©2026 MICROSENS GmbH & Co. KG - Hamm/Germany - www.microsens.com

26.3 WIFI CLI Command Reference

The following table lists all CLI commands applicable for this feature section. For each parameter, the access mode is given:

R = Read Only, R/W = Read/Write, X = Executable Action.

Please note that the effective access rights are dependent on the login level of the user.

Category	Group	Table	Parameter	Options	Access	Description
Device.						
	wifi.					Wireless Access Point setup
			enable_wifi		R/W	Generally enable the access point and its wireless interface.
		access_point.				Basic settings of the access point.
			hostname		R/W	Access point hostname.
			device_ip		R/W	Static device IP address of the access point.
			subnet_mask		R/W	Static subnet mask.
			gateway		R/W	Default gateway IP address. When DHCP is enabled, DHCP has preference over this setting.
			update_firmware		X	Update the access point firmware. When no file name is supplied, the latest version is automatically selected. Alternatively, a specific file name can be supplied to use another version. Use Management.files.firmware.display_files to view a list of available files under the AP section.
			reboot		X	This command will restart the access point only. All wireless communication will be disrupted for about a minute! Syntax: reboot = CONFIRM.
		interface.				This table defines the Ethernet interface available via Wife
			country_code		R/W	International country code. Use DE for Germany, FR for France, etc.
			ssid		R/W	Defines the name under which the access point can be reached. This will be displayed as network name.
			enter_preshared_key		X	Enter the password required to access the network. No spaces are permitted and at least 8 character are required.
			encrypted_preshared_key		R/W	Encrypted form of the entered key. This is automatically filled in when the enter_fa_auth command is executed.
			expose_ssid		R/W	Defines whether the network can be detected or is hidden.
			encryption		R/W	
			dhcp_server		R/W	Enable DHCP server to automatically provide an IP address to the attached wife devices.
			dhcp_start_address		R/W	Lowest address served.
			dhcp_number_of_addresses		R/W	The number of IP addresses served starting from the dhcp_start_address
			channel_number		R/W	Zero is automatic selection.
			channel_width		R/W	

©2026 MICROSENS GmbH & Co. KG - Hamm/Germany - www.microsens.com

firewall_config.			Each entry of this variable table defines the details of one test case.
	enable_ingress_firewall	R/W	When disabled the ingress_firewall table is not in effect. This is intended for test purposes only.
	enable_egress_firewall	R/W	When disabled the ingress_firewall table is not in effect. This is intended for test purposes only.
	drop_invalid_packets	R/W	Drop invalid packets, not matching any active connection.
	syn_rate_limiting	R/W	Defines how many SYN request are accepted per second. When the limit is reached, a SYN flooding attack is assumed and the port is protected. The value 0 disables the rate limit check.
	use_syn_cookies	R/W	SYN cookie is a technique used to resist SYN flooding attacks.
	tcp_window_scaling	R/W	Enable TCP window scaling.
firewall_rules.			Firewall settings for traffic ingressing on the Wi-Fi___33 interface.
	incoming_acl_list	R/W	Name of the ACL (access control list) which declares which ACL applies to incoming traffic (redirects). Several ACL may be specified with a comma separated list. Example acl1, otherlist
	incoming_acl_default	R/W	Defines which action is taken when none of the ACL records matches. Default is deny which blocks all traffic.
	outgoing_acl_list	R/W	Name of the ACL (access control list) which declares which ACL applies to incoming traffic (redirects). Several ACL may be specified with a comma separated list. Example acl1, otherlist
	outgoing_acl_default	R/W	Defines which action is taken when none of the ACL records matches. Default is deny which blocks all traffic.
status.			Indicates basic WIFI related status information
	overall_status	R	Indicates if WIFI module is operational.
	number_of_connections		
ip_v4_status.			This section shows a summary of IPv4 settings as they are currently active. These may reflect the statically configured values or may be dynamically assigned using DHCP.
	dynamic_device_ip	R	Currently used access point IP address.
	dynamic_subnet_mask	R	Currently used access point subnet mask.
	dynamic_gateway	R	Currently used access point gateway IP address.

©2026 MICROSENS GmbH & Co. KG - Hamm/Germany - www.microsens.com

26.4 WIFI Configuration Parameters

Group	**General Parameters**
Path	Device.WIFI

enable_wifi	Generally enable the access point and its wireless interface.	
	Values	enabled, disabled
	OID	1.3.6.1.4.1.3181.10.6.1.98.1 (wifiEnableWifi)

Group	**access_point**
Path	Device.WIFI.access_point
Description	Basic settings of the access point.

hostname	Access point hostname.	
	Value	String, max. 64 characters.
	OID	1.3.6.1.4.1.3181.10.6.1.98.2.1.2 (accessPointHostname)
device_ip	Static device IP address of the access point.	
	Format	IPv4 Address *ddd.ddd.ddd.ddd* (*ddd* = decimal number between 000 to 255)
	OID	1.3.6.1.4.1.3181.10.6.1.98.2.1.3 (accessPointDeviceIp)
subnet_mask	Static subnet mask.	
	Format	IPv4 Address *ddd.ddd.ddd.ddd* (*ddd* = decimal number between 000 to 255)
	OID	1.3.6.1.4.1.3181.10.6.1.98.2.1.4 (accessPointSubnetMask)
gateway	Default gateway IP address. When DHCP is enabled, DHCP has preference over this setting.	
	Format	IPv4 Address *ddd.ddd.ddd.ddd* (*ddd* = decimal number between 000 to 255)
	OID	1.3.6.1.4.1.3181.10.6.1.98.2.1.5 (accessPointGateway)

©2026 MICROSENS GmbH & Co. KG - Hamm/Germany - www.microsens.com

update_firmware	Update the access point firmware. When no file name is supplied, the latest version is automatically selected. Alternatively, a specific file name can be supplied to use another version. Use Management.files.firmware.display_files to view a list of available files under the AP section. **Action** Excecute command with parameter string max. 128 characters. **OID** 1.3.6.1.4.1.3181.10.6.1.98.2.1.6 (accessPointUpdateFirmware)
reboot	This command will restart the access point only. All wireless communication will be disrupted for about a minute! Syntax: reboot = CONFIRM. **Action** Excecute command with parameter string max. 16 characters. **OID** 1.3.6.1.4.1.3181.10.6.1.98.2.1.7 (accessPointReboot)

Group	**interface**
Path	Device.WIFI.interface
Description	This table defines the Ethernet interface available via Wife
country_code	International country code. Use DE for Germany, FR for France, etc. **Value** String, max. 4 characters. **OID** 1.3.6.1.4.1.3181.10.6.1.98.3.1.2 (interfaceCountryCode)
ssid	Defines the name under which the access point can be reached. This will be displayed as network name. **Value** String, max. 32 characters. **OID** 1.3.6.1.4.1.3181.10.6.1.98.3.1.3 (interfaceSsid)
enter_preshared_key	Enter the password required to access the network. No spaces are permitted and at least 8 character are required. **Action** Excecute command with parameter string max. 128 characters. **OID** 1.3.6.1.4.1.3181.10.6.1.98.3.1.4 (interfaceEnterPresharedKey)
encrypted_preshared_key	Encrypted form of the entered key. This is automatically filled in when the enter_fa_auth command is executed. **Value** String, max. 256 characters. **OID** 1.3.6.1.4.1.3181.10.6.1.98.3.1.5 (interfaceEncryptedPresharedKey)

©2026 MICROSENS GmbH & Co. KG - Hamm/Germany - www.microsens.com

expose_ssid	Defines whether the network can be detected or is hidden.		
	Values	*HIDDEN*	The SSID is not transmitted to hide the network
		VISIBLE	SSID is transmitted so that user can easily connect
	OID	1.3.6.1.4.1.3181.10.6.1.98.3.1.6 (interfaceExposeSsid)	
encryption			
	Values	*NONE*	No encryption is used
		WEP	Use WEP encryption
		WPA_PSK	Use PSK encryption
		WPA_PSK2	Use PSK2 encryption
	OID	1.3.6.1.4.1.3181.10.6.1.98.3.1.7 (interfaceEncryption)	
dhcp_server	Enable DHCP server to automatically provide an IP address to the attached wife devices.		
	Values	enabled, disabled	
	OID	1.3.6.1.4.1.3181.10.6.1.98.3.1.8 (interfaceDhcpServer)	
dhcp_start_address	Lowest address served.		
	Format	IPv4 Address *ddd.ddd.ddd.ddd* (*ddd* = decimal number between 000 to 255)	
	OID	1.3.6.1.4.1.3181.10.6.1.98.3.1.9 (interfaceDhcpStartAddress)	
dhcp_number_of_addresses	The number of IP addresses served starting from the dhcp_start_address		
	Value	Number in range 0-255	
	OID	1.3.6.1.4.1.3181.10.6.1.98.3.1.10 (interfaceDhcpNumberOfAddresses)	
channel_number	Zero is automatic selection.		
	Value	Number in range 0-11	
	OID	1.3.6.1.4.1.3181.10.6.1.98.3.1.11 (interfaceChannelNumber)	
channel_width			
	Values	*HT20*	Single 20MHz channel
		HT40P	2x 20MHz channels, primary control channel is upper, secondary channel is below
		HT40N	2x 20MHz channels, primary control channel is lower, secondary channel is above
	OID	1.3.6.1.4.1.3181.10.6.1.98.3.1.12 (interfaceChannelWidth)	

©2026 MICROSENS GmbH & Co. KG - Hamm/Germany - www.microsens.com

Group	**firewall_config**
Path	Device.WIFI.firewall_config
Description	Each entry of this variable table defines the details of one test case.

enable_ingress_firewall	When disabled the ingress_firewall table is not in effect. This is intended for test purposes only. **Values** enabled, disabled **OID** 1.3.6.1.4.1.3181.10.6.1.98.4.1.2 (firewallConfigEnableIngressFirewall)
enable_egress_firewall	When disabled the ingress_firewall table is not in effect. This is intended for test purposes only. **Values** enabled, disabled **OID** 1.3.6.1.4.1.3181.10.6.1.98.4.1.3 (firewallConfigEnableEgressFirewall)
drop_invalid_packets	Drop invalid packets, not matching any active connection. **Values** enabled, disabled **OID** 1.3.6.1.4.1.3181.10.6.1.98.4.1.4 (firewallConfigDropInvalidPackets)
syn_rate_limiting	Defines how many SYN request are accepted per second. When the limit is reached, a SYN flooding attack is assumed and the port is protected. The value 0 disables the rate limit check. **Value** Number in range 0-255 **OID** 1.3.6.1.4.1.3181.10.6.1.98.4.1.5 (firewallConfigSynRateLimiting)
use_syn_cookies	SYN cookie is a technique used to resist SYN flooding attacks. **Values** enabled, disabled **OID** 1.3.6.1.4.1.3181.10.6.1.98.4.1.6 (firewallConfigUseSynCookies)
tcp_window_scaling	Enable TCP window scaling. **Values** enabled, disabled **OID** 1.3.6.1.4.1.3181.10.6.1.98.4.1.7 (firewallConfigTcpWindowScaling)

Group	**firewall_rules**
Path	Device.WIFI.firewall_rules
Description	Firewall settings for traffic ingressing on the Wi-Fi___33 interface.

©2026 MICROSENS GmbH & Co. KG - Hamm/Germany - www.microsens.com

incoming_acl_list	Name of the ACL (access control list) which declares which ACL applies to incoming traffic (redirects). Several ACL may be specified with a comma separated list. Example acl1, otherlist **Value** String, max. 128 characters. **OID** 1.3.6.1.4.1.3181.10.6.1.98.5.1.2 (firewallRulesIncomingAclList)
incoming_acl_default	Defines which action is taken when none of the ACL records matches. Default is deny which blocks all traffic. **Values** *DENY* When no entry matches the ACL then the ARP is denied *PERMIT* When no entry matches the ACL then the ARP is accepted. **OID** 1.3.6.1.4.1.3181.10.6.1.98.5.1.3 (firewallRulesIncomingAclDefault)
outgoing_acl_list	Name of the ACL (access control list) which declares which ACL applies to incoming traffic (redirects). Several ACL may be specified with a comma separated list. Example acl1, otherlist **Value** String, max. 128 characters. **OID** 1.3.6.1.4.1.3181.10.6.1.98.5.1.4 (firewallRulesOutgoingAclList)
outgoing_acl_default	Defines which action is taken when none of the ACL records matches. Default is deny which blocks all traffic. **Values** *DENY* When no entry matches the ACL then the ARP is denied *PERMIT* When no entry matches the ACL then the ARP is accepted. **OID** 1.3.6.1.4.1.3181.10.6.1.98.5.1.5 (firewallRulesOutgoingAclDefault)

©2026 MICROSENS GmbH & Co. KG - Hamm/Germany - www.microsens.com

26.5 WIFI Status Parameters

Group	**status**
Path	Device.WIFI.status
Description	Indicates basic WIFI related status information

overall_status

Indicates if WIFI module is operational.

Values	*NOT_PRESENT*	No WIFI module connected
	DISABLED	WIFI module is not configured
	FAULT	WIFI module has some fault and cannot operate
	OPERATIONAL	WIFI module is up and running
OID	1.3.6.1.4.1.3181.10.6.1.98.100.1.2 (statusOverallStatus)	

number_of_connections

Value	Number in range 0-0xFFFFFFFF
OID	1.3.6.1.4.1.3181.10.6.1.98.100.1.3 (statusNumberOfConnections)

Group	**ip_v4_status**
Path	Device.WIFI.ip_v4_status
Description	This section shows a summary of IPv4 settings as they are currently active. These may reflect the statically configured values or may be dynamically assigned using DHCP.

dynamic_device_ip

Currently used access point IP address.

Format	IPv4 Address *ddd.ddd.ddd.ddd* (*ddd* = decimal number between 000 to 255)
OID	1.3.6.1.4.1.3181.10.6.1.98.101.1.2 (ipV4StatusDynamicDeviceIp)

dynamic_subnet_mask

Currently used access point subnet mask.

Format	IPv4 Address *ddd.ddd.ddd.ddd* (*ddd* = decimal number between 000 to 255)
OID	1.3.6.1.4.1.3181.10.6.1.98.101.1.3 (ipV4StatusDynamicSubnetMask)

©2026 MICROSENS GmbH & Co. KG - Hamm/Germany - www.microsens.com

dynamic_gateway	Currently used access point gateway IP address.	
	Format	IPv4 Address *ddd.ddd.ddd.ddd* (*ddd* = decimal number between 000 to 255)
	OID	1.3.6.1.4.1.3181.10.6.1.98.101.1.4 (ipV4StatusDynamicGateway)

©2026 MICROSENS GmbH & Co. KG - Hamm/Germany - www.microsens.com

27 Virtual LANs (VLANs)

27.1 Key Features

VLAN Filter

Up to 256 VLAN's may be configured.

Very high number of VLANs can be assigned. Previous product only supported 64 VLANs.

Access Mode

For the connection of non-VLAN capable end devices (e.g. PCs). Outgoing packets are sent untagged. Incoming packets are tagged with the port default VLAN ID (PVID).

Trunk Mode

For the interconnection of VLAN capable switches. Outgoing packets are always sent tagged. Incoming packets are received tagged. Incoming packets without VLAN tag are tagged with the port default VLAN ID (PVID).

Hybrid Mode

For the connection of VLAN capable and non-VLAN capable devices on the same port (e.g. VoIP-phone (tagged) and PC (untagged)). Outgoing packets are sent tagged, except packets for the port default VLAN ID (PVID), which are untagged. Incoming packets are received untagged for the port default VLAN (PVID), all other packets are tagged.

Ideal setup for the desktop application of one PC and one IP telephone connected to one switch port.

Multiple VLAN Reservation Protocol (MVRP)

Multiple VLAN Reservation Protocol. This protocol automates and centralizes VLAN assignment in large networks.

Greatly simplies VLAN deployment in larger networks.

Extreme Auto Attach (former Avaya Fabric Attach)

Support to attach to an SPB based network by mapping local VLANs to SPB I-SIDs. SPB is the basis of the Avaya Fabric, now Extreme.

The connected application need not be SPB aware to make use of the advanced network functionality.

Extreme (Avaya) Zero Touch

Attach to an SPB based network,automatically obtaining the VLANs - I-SID bindings over the network. Note: Requires preset of authentication key to match network.

Ports can be placed into VLANs from central network, which simplifies network management.

©2026 MICROSENS GmbH & Co. KG - Hamm/Germany - www.microsens.com

Stacked VLANs (Q-in-Q)

Stacked VLAN are used to transport customer VLAN traffic accross a carrier network using VLAN itself. The feature is also known as Q-in-Q and provider bridging. Configurable Ethertype fields are provided.

The feature permit use of the switch as access device to a carrier network using VLANs.

Priority Override

VLAN priority code point of incoming packets can be overwritten with the VLAN specific priority defined in the VLAN filter.

Voice VLAN

VLAN ID used by LLDP/CDP to assign VLAN to connected VoIP-phone.

RSTP VLAN

VLAN ID used by Spanning Tree instance for BPDU tagging.

Unauthorized VLAN

VLAN ID assigned by Port Based Access Control to unauthorized ports (guest VLAN).

Management VLAN

VLAN ID used by the management agent (device internal port).

27.2 Functional Description

Virtual LANs (VLANs) allow the logical structuring of networks into groups independent from the physical network structure. These groups (called 'VLANs') are completely isolated from each other, no network traffic (including broadcasts) can pass between them. Up to 4095 VLANs can be defined in a network, each identified by a unique number between 1 and 4095. This number is added to each packet transmitted in the network (VLAN-Tag).

When VLAN filtering mode is enabled, the switch forwards and filters all packets based on their VLAN tag according to IEEE Std. 802.1Q. The VLAN filtering table determines if a packet is allowed to be forwarded to a switch port. The final forwarding decision based on the packets destination MAC address is then made within the VLAN.

For each port it can be defined, if the VLAN tag is stripped on outgoing packets (untagged) or remains unchanged (tagged). An individual VLAN can be defined for the device internal management port.

27.2.1 VLAN filter table

Each VLAN that shall be forwarded by the switch must be defined in the VLAN filter table.

A maximum of 256 VLAN ID entries can be defined in the table. Each of these VLAN IDs can be selected out of the full range of 4095 possible IDs. For testing purposes, single entries can be disabled without deleting them, so they can be simply re-enabled if required.

To simplify the handling of VLANs, for each VLAN ID an individual name string ('alias') can be assigned. This makes the administration and configuration of VLANs more intuitive.

For each VLAN ID the allowed ports must be defined. The so called port membership defines, if a port is part of the VLAN (member) or not. Packets are only forwarded to ports that are defined member of the VLAN ID the packet is tagged with.

Device internal management ports must also be member of the VLAN they shall communicate with. This setting is made via a separate parameter.

©2026 MICROSENS GmbH & Co. KG - Hamm/Germany - www.microsens.com

27.2.2 Port VLAN Mode

Access Mode

Outgoing frames are send untagged. Incoming frames must be untagged and become tagged with the ports default VLAN ID and Priority. This port mode is normally used for the connection of end devices like PCs that cannot handle VLAN tagged packets

Trunk Mode

Outgoing frames are always send tagged. Incomming frames are expected to be received tagged. Incoming frames without VLAN tag were processed with the ports default VLAN ID. This mode is normally used as inter switch connection.

Hybrid Mode

Outgoing frames are send tagged, except the frames of the port default VLAN. Incoming frames of the port default VLAN are expected untagged, frames of other VLANs are always expected tagged. This mode is normally used for combined connection of a VoIP phone and a PC at a port. In this setup the phone is communicating tagged and the PC is communicating untagged.

27.2.3 Port Default VLAN and Priority

Packets entering on a port without VLAN tag (untagged) are assigned an VLAN tag with the port default VLAN and priority value before further internal processing.

27.2.4 Priority Overwrite

When the priority overwrite mode is enabled on the port and for the VLAN, the priority field of incomming packets on that port is overwritten with the priority value of that VLAN, defined in the VLAN filter table.

27.2.5 Force Default VLAN ID

When the 'Force Default VLAN' mode is enabled for a port, the VLAN ID of all incomming packets on that port is overwritten with the Port Default VLAN ID, even if they are tagged with a NULL value. A NULL value in the VID indicates that the VLAN tag is only used for prioritization. The prioritization field in the VLAN tag remains unchanged by the VID replacement.

This mode can be used as additional security measure to prevent network intrusion by injecting VLAN-tagged packets into a port.

27.2.6 Best Practice: How to configure VLANs

Disable VLAN filtering

While changing the VLAN configuration, VLAN filtering should be disabled. This prevents unwanted effects when unfinished or partial configurations become active, e.g. if you change the default VLAN ID of a port before adding this VLAN ID to the filter table, all traffic through that port is discarded. If this happens to be the port by which you are connected to the switch, this was the last action you have performed on the device.

Finally, if all settings have been applied and checked, VLAN filtering should be enabled.

```
# Disable VLAN filtering
Protocol.VLAN.enable_vlan_filtering = Disabled
```

©2026 MICROSENS GmbH & Co. KG - Hamm/Germany - www.microsens.com

```
# Enable VLAN filtering
Protocol.VLAN.enable_vlan_filtering = Enabled
```

If you cannot disable VLAN filtering, as the device is already deployed, then take special care that you are not accidentially changing the management VLAN ID and the corresponding VLAN filter table entry.

Define VLAN filter table entries first

For each VLAN ID used add a corresponding VLAN Filter table entry. The following example shows the CLI command script to add new entries for VLAN IDs 101 to 104:

```
# Add port VLAN filer entries
Protocol.VLAN.filter_config[*].vlan_id = 101
Protocol.VLAN.filter_config[*].vlan_id = 102
Protocol.VLAN.filter_config[*].vlan_id = 103
Protocol.VLAN.filter_config[*].vlan_id = 104
```

Now the port membership for external ports and the membership of internal management ports for this VLAN ID can be defined.

Do not forget to add the port membership for the uplink and downlink ports. The following example script assigns local port 1, uplink (5) and downlink port (6) as members of VLAN 101:

```
# Add port membership for VLANs
Protocol.VLAN.filter_config[101].port_members = 1/1, 1/5, 1/6
Protocol.VLAN.filter_config[102].port_members = 1/2, 1/5, 1/6
Protocol.VLAN.filter_config[103].port_members = 1/3, 1/5, 1/6
Protocol.VLAN.filter_config[104].port_members = 1/4, 1/5, 1/6
```

Define port default VLANs last

When a VLAN ID is defined in the filter table, the VLAN ID can now be set for those ports that are member of that VLAN and shall tag incomming traffic accordingly.

Additionally the port VLAN mode must be defined. For local ports, Access or Hybrid mode is commonly used for the connection of end-devices. Up- and downlink ports should operate in VLAN Trunk mode, as they are inter-switch connections.

The following example sets the local ports 1-4 to Access mode and the up- and downlink ports (5 + 6) to Trunk mode:

```
# Set port VLAN mode
Protocol.VLAN.port_config[1/1].vlan_mode = ACCESS
Protocol.VLAN.port_config[1/2].vlan_mode = ACCESS
Protocol.VLAN.port_config[1/3].vlan_mode = ACCESS
Protocol.VLAN.port_config[1/4].vlan_mode = ACCESS
Protocol.VLAN.port_config[1/5].vlan_mode = TRUNK
Protocol.VLAN.port_config[1/6].vlan_mode = TRUNK
```

©2026 MICROSENS GmbH & Co. KG - Hamm/Germany - www.microsens.com

Now the port default VLAN ID is set to an individual value for each port. Up- and downlink have the management VLAN ID assigned:

```
# Set port default VLAN
Protocol.VLAN.port_config[1/1].default_vlan_id = 101
Protocol.VLAN.port_config[1/2].default_vlan_id = 102
Protocol.VLAN.port_config[1/3].default_vlan_id = 103
Protocol.VLAN.port_config[1/4].default_vlan_id = 104
```

Add VLAN for management port

For security reasons, normally the network management is placed in a separate VLAN. Access to this management VLAN should only be possible by a network administator from the central network via the up- and downlink ports, but never from the local ports.

This means for configuration, that only the internal management port and the up- and downlink ports must be member of the management VLAN.

Furthermore the management port VLAN ID must be set to the VLAN ID used for the management. The following example shows the configuration steps necessary to configure a device with uplink on port 5 for a management VLAN using the VLAN ID 99:

```
# Add Management VLAN settings
Protocol.VLAN.filter_config[*].vlan_id = 99
Protocol.VLAN.filter_config[99].port_members = 1/5, 1/6
Protocol.VLAN.filter_config[99].management_members = ALL
Protocol.VLAN.vlan_id_config.management_vlan_id = 99
Protocol.VLAN.port_config[1/5].default_vlan_id = 99
Protocol.VLAN.port_config[1/6].default_vlan_id = 99
```

27.2.7 Best Practice: VLAN standard application

In normal VLAN mode, each copper port and the management port has exactly one VLAN ID assigned. It is possible to assign the same VLAN ID to multiple ports to group ports in the same VLAN. All traffic entering the port is tagged automatically with the assigned port VID and priority, all traffic output on the port has the VLAN tag automatically removed.

The fiber uplink port normally operates in VLAN trunk mode, meaning it passes all traffic from the other ports to the central switch. The connected port on the central side must operate in VLAN trunk mode accordingly. All traffic entering the switch is filtered and forwarded based on the VLAN table setting.

©2026 MICROSENS GmbH & Co. KG - Hamm/Germany - www.microsens.com

27.3 VLAN CLI Command Reference

The following table lists all CLI commands applicable for this feature section. For each parameter, the access mode is given:

R = Read Only, R/W = Read/Write, X = Executable Action.

Please note that the effective access rights are dependent on the login level of the user.

Category	Group	Table	Parameter	Options	Access	Description
Protocol.						
	vlan.					VLAN related settings
			enable_vlan_filtering		R/W	Generally enable VLAN filtering function:
		vlan_id_config.				This section defines some default VLAN settings.
			management_vlan_id		R/W	VLAN ID for internal management port. Packets sent by the management agent are tagged with this VLAN ID,
			management_priority		R/W	VLAN Priority for internal management port. Packets sent by the internal management agent are tagged with this priority value.
			voice_vlan_id		R/W	Voice VLAN ID. Special VLAN for IP phones.
			rstp_vlan_id		R/W	RSTP VLAN ID. When using single instance Spanning Tree (STP or RSTP) in combination with VLANs, all spanning tree messages are tagged with this VLAN ID.
			unauthorized_vlan_id		R/W	When using port access control with dynamic VLANs, unauthorized ports are attached to this VLAN.
			smartoffice_vlan_id		R/W	VLAN ID used for SmartOffice control traffic between director and controllers. Also used by the SmartOffice GUI.
		port_config[PORT].				These settings define the default VLANs per port and defines how untagged data are treated.
			vlan_mode		R/W	Defines how the VLAN tag of incoming and outgoing packets shall be handled on port.
			default_vlan_id		R/W	Default VLAN ID for port. Incoming packets without VLAN tag are automatically tagged using the default VLAN ID and default priority values.
			force_default_vlan_id		R/W	When enabled, incoming packets with existing VLAN tag are overwritten with the default port VLAN ID.
			default_priority		R/W	Default priority value for port. Incoming packets without VLAN tag are automatically tagged using the default VLAN ID and default priority values.
			priority_override		R/W	When enabled, incoming packets with existing VLAN tag are overwritten with the default priority value.
			unauthorized_vlan_id		R/W	When using port access control with dynamic VLANs, unauthorized ports are attached to this VLAN. When set to 0 the global vlan_id_config.unauthorized_vlan_id parameter applies. Use this parameter to set an independent port specific unauthorized vlan.

©2026 MICROSENS GmbH & Co. KG - Hamm/Germany - www.microsens.com

	fallback_vlan_id	R/W	When using port access control with dynamic VLANs and a RADIUS server, the fallback vlan is assigned when the RADIUS server is unavailable. If this parameter is set to 0 the unauthorized vlan is used instead. If this is also 0 then the global vlan_id_config.unauthorized_vlan_id parameter applies.
	q_in_q_ethertype	R/W	Ethertype configuration only applies for vlan_mode Q_IN_Q.
filter_config[DYNAMIC].			Defines the used VLANs and their associated ports.
	vlan_id	R/W	Defines filter table entry for this VLAN ID. This is the key value for the table. Type '=:' to edit, use index '[*] = new_vlan:' to add an entry. Edit string to nothing to delete entry.
	entry_mode	R/W	When disabled, filtering for this VLAN ID is disabled without deleting the table entry. This can be used for testing and configuration.
	alias	R/W	User-definable name string for VLAN.
	mstp_group	R/W	All filter entries with the same mstp_group number will share an MSTP instance. A group may consist of one or many vlan entries. A value of 0 indicates that MSTP is not used for this VLAN. Do not use MSTP and ERPS on the same VLAN.
	fabric_attach_i_sid	R/W	This parameter defines the VLAN to I-SID binding when the shortest path bridging (SPB) fabric attach feature is used. The largest possible value is 16777215.
	erps_id	R/W	All filter entries with the same erps_id will share an ERPS Ring. A value of 0 indicates that ERPS is not used for this VLAN. Note: ERPS and MSTP may not be combined for a given VLAN.
	port_members	R/W	Defines port memberships for VLAN. Syntax: slot/port, slot/port or use hex value for quick setup = 0x3f (ports 1-6)
	management_members	R/W	Defines the port membership for the internal management port(s).
	priority_override	R/W	When enabled the priority value of packets tagged with this VLAN is overwritten with the new_priority value.
	new_priority	R/W	VLAN priority value when priority_override is enabled.
	enable_mvrp	R/W	Generally enable MVRP (Multiple VLAN Registration Protocol) function. MVRP is operational on 802.1q trunk ports only.
mvrp_port_config[PORT].			Configuration parameter concerning the port specific MVRP settings.
	enable_mvrp	R/W	Enable MVRP (Multiple VLAN Registration Protocol) on this port.
	registration_mode	R/W	Configuration of the MVRP registration mode.
	join_timer	R/W	Number of milliseconds that the interface must wait before sending MVRP PDUs.

©2026 MICROSENS GmbH & Co. KG - Hamm/Germany - www.microsens.com

	leave_timer	R/W	Number of milliseconds that the switch retains a VLAN in the Leave state before the VLAN is unregistered. At a minimum, set the leave-timer interval at twice the join-timer interval.
	leaveall_timer	R/W	Number of milliseconds between the sending of Leave All messages.
fabric_attach_port_config[PORT].			Configuration parameter controlling the fabric attach feature. Each port can be configured individually.
	enable_fabric_attach	R/W	Shortest path bridging (SPB) fabric attach feature can be used to simplify configuration in an SBP enabled network. Please also generally enable the LLDP function to use this feature. When enabled the port will act as client to a fabric attach network.
	msg_authentication	R/W	when enabled message authentication using the fa_auth key is used.
	learn_fabric_attach_info	R/W	When enabled FA information sent out from downstream devices are stored and forwarded to the network on behalf of the other device.
	learn_management_vlan	R/W	When enabled the management VLAN of the device can dynamically be configured via FA.
	enter_fa_auth_key	X	Enter the fabric attach authentication keys required to access the network. No spaces are permitted.
	encrypted_fa_auth_key	R/W	Encrypted form of the entered key. This is automatically filled in when the enter_fa_auth command is executed.
	number_of_entries	R	Number of VLAN entries in the table.
	dynamic_management_vlan	R	The active VLAN used to access the internal managment interface
status[256].			This table lists the status of all defined VLANs.
	vlan_id	R	VLAN identifier
	time_mark	R	
	alias	R	Contains the alias name for static entries.
	port_members	R	Lists all ports that belong to this VLAN.
	filter_database	R	filter data base
	egress_ports	R	The set of ports which are transmitting traffic for this VLAN as either tagged or untagged frames.
	untagged_ports	R	The set of ports which are transmitting traffic for this VLAN as untagged frames.
	mstp_egress_ports	R	The set of ports which are transmitting traffic for this VLAN as provided by the MSTP protocol as either tagged or untagged frames.
	fabric_attach_state	R	Indicates if auto attachment to the fabric was successful.
	fabric_attach_i_sid	R	This indicates the VLAN to I-SID binding when the shortest path bridging (SPB) fabric attach feature is used.
	creation_mode	R	Indicates by which means this VLAN entry was created.
	creation_source_port	R	The port from which a message for a dynamically assigned VLAN was created.

©2026 MICROSENS GmbH & Co. KG - Hamm/Germany - www.microsens.com

	creation_time	R	The value of system.uptime when this VLAN was created.
port_status[PORT].			Port related view of the currently active VLAN setup.
	assigned_vlan_ids	R	List of all VLAN ids that are configured or dynamically assigned to this port.
	dynamic_default_vlan_id	R	Indicates the current port default VLAN. The value may change due to port authentication or configuration.
	last_update_method	R	Indicates what caused the last VLAN reconfiguration.
	last_updating_mac	R	Indicates which MAC address, if any, was involve in changing the VLAN setting for this port last.
	last_update_time	R	Indicates the time when the VLAN settings were last changed.
mvrp_status[PORT].			This table lists MVRP status information.
	last_source_mac	R	The Source MAC Address of the last MVRP message received on this port.
	failed_registrations	R	The total number of failed MVRP registrations, for any reason, on this port.

©2026 MICROSENS GmbH & Co. KG - Hamm/Germany - www.microsens.com

27.4 VLAN Configuration Parameters

Group	**General Parameters**
Path	Protocol.VLAN

enable_vlan_filtering	Generally enable VLAN filtering function:	
	Values	enabled, disabled
	OID	1.3.6.1.4.1.3181.10.6.2.82.1 (vlanEnableVlanFiltering) 1.3.6.1.2.1.17.7.1.4.5.1.3 (dot1qPortIngressFiltering)
enable_mvrp	Generally enable MVRP (Multiple VLAN Registration Protocol) function. MVRP is operational on 802.1q trunk ports only.	
	Values	enabled, disabled
	OID	1.3.6.1.4.1.3181.10.6.2.82.5 (vlanEnableMvrp) 1.3.111.2.802.1.1.4.1.1.1.1.6 (ieee8021QBridgeMvrpEnabledStatus)

Group	**port_config**, for each port[0..24]
Path	Protocol.VLAN.port_config[port]
Description	These settings define the default VLANs per port and defines how untagged data are treated.

©2026 MICROSENS GmbH & Co. KG - Hamm/Germany - www.microsens.com

vlan_mode	Defines how the VLAN tag of incoming and outgoing packets shall be handled on port. **Values** *ACCESS* – All packets received or transmitted by the port are untagged. Received packets are tagged with the port default VLAN ID and priority. Transmitted packets have their VLAN tag removed before they are sent out. *HYBRID* – Outgoing packets remain unchanged except for packets tagged with the port default VLAN ID. These packets have their VLAN tag removed before they are sent out. Received packets are forwarded unchanged depending on the VLAN filter table settings, except for untagged packets that are tagged with the port default VLAN ID and priority. *TRUNK* – All packets received or transmitted by the port are tagged. Received packets are forwarded unchanged depending on the VLAN filter table settings. Outgoing packets are sent out unchanged. *Q_IN_Q_CUSTOMER* – 802.1ad (Q in Q) setting. Defines VLAN of the customer side. *Q_IN_Q_PROVIDER* – 802.1ad (Q in Q) setting. Defines VLAN of the provider side. **OID** 1.3.6.1.4.1.3181.10.6.2.82.3.1.2 (portConfigVlanMode)
default_vlan_id	Default VLAN ID for port. Incoming packets without VLAN tag are automatically tagged using the default VLAN ID and default priority values. **Value** Number in range 0-4095 **OID** 1.3.6.1.4.1.3181.10.6.2.82.3.1.3 (portConfigDefaultVlanId) 1.3.6.1.2.1.17.7.1.4.5.1.1 (dot1qPvid)
force_default_vlan_id	When enabled, incoming packets with existing VLAN tag are overwritten with the default port VLAN ID. **Values** enabled, disabled **OID** 1.3.6.1.4.1.3181.10.6.2.82.3.1.4 (portConfigForceDefaultVlanId)
default_priority	Default priority value for port. Incoming packets without VLAN tag are automatically tagged using the default VLAN ID and default priority values. **Values** *PRIORITY_0* – Background (lowest) *PRIORITY_1* – Best Effort *PRIORITY_2* – Excellent Effort *PRIORITY_3* – Critical Applications *PRIORITY_4* – Video *PRIORITY_5* – Voice *PRIORITY_6* – Internetwork Control *PRIORITY_7* – Network Control (highest) **OID** 1.3.6.1.4.1.3181.10.6.2.82.3.1.5 (portConfigDefaultPriority)

©2026 MICROSENS GmbH & Co. KG - Hamm/Germany - www.microsens.com

priority_override	When enabled, incoming packets with existing VLAN tag are overwritten with the default priority value. **Values** enabled, disabled **OID** 1.3.6.1.4.1.3181.10.6.2.82.3.1.6 (portConfigPriorityOverride)
unauthorized_vlan_id	When using port access control with dynamic VLANs, unauthorized ports are attached to this VLAN. When set to 0 the global vlan_id_config.unauthorized_vlan_id parameter applies. Use this parameter to set an independent port specific unauthorized vlan. **Value** Number in range 0-4095 **OID** 1.3.6.1.4.1.3181.10.6.2.82.3.1.7 (portConfigUnauthorizedVlanId)
fallback_vlan_id	When using port access control with dynamic VLANs and a RADIUS server, the fallback vlan is assigned when the RADIUS server is unavailable. If this parameter is set to 0 the unauthorized vlan is used instead. If this is also 0 then the global vlan_id_config.unauthorized_vlan_id parameter applies. **Value** Number in range 0-4095 **OID** 1.3.6.1.4.1.3181.10.6.2.82.3.1.8 (portConfigFallbackVlanId)
q_in_q_ethertype	Ethertype configuration only applies for vlan_mode Q_IN_Q. **Values** *OX_88A8* Standard value for 802.1ad *OX_9100* Cisco standard value for 802.1ad *OX_9200* Alternate Ethertype *OX_8100* Normal VLAN tag usually not used for double tagged application. (801.1q) **OID** 1.3.6.1.4.1.3181.10.6.2.82.3.1.9 (portConfigQInQEthertype)

Group	**filter_config**, dynamical size
Path	Protocol.VLAN.filter_config
Description	Defines the used VLANs and their associated ports.
vlan_id	Defines filter table entry for this VLAN ID. This is the key value for the table. Type '=:' to edit, use index '[*] = new_vlan:' to add an entry. Edit string to nothing to delete entry. **Value** String, max. 4 characters. **OID** 1.3.6.1.4.1.3181.10.6.2.82.4.1.2 (filterConfigVlanId)
entry_mode	When disabled, filtering for this VLAN ID is disabled without deleting the table entry. This can be used for testing and configuration. **Values** enabled, disabled **OID** 1.3.6.1.4.1.3181.10.6.2.82.4.1.3 (filterConfigEntryMode)

©2026 MICROSENS GmbH & Co. KG - Hamm/Germany - www.microsens.com

alias	User-definable name string for VLAN. **Value** String, max. 32 characters. **OID** 1.3.6.1.4.1.3181.10.6.2.82.4.1.4 (filterConfigAlias)
mstp_group	All filter entries with the same mstp_group number will share an MSTP instance. A group may consist of one or many vlan entries. A value of 0 indicates that MSTP is not used for this VLAN. Do not use MSTP and ERPS on the same VLAN. **Value** Number in range 0-64 **OID** 1.3.6.1.4.1.3181.10.6.2.82.4.1.5 (filterConfigMstpGroup)
fabric_attach_i_sid	This parameter defines the VLAN to I-SID binding when the shortest path bridging (SPB) fabric attach feature is used. The largest possible value is 16777215. **Value** Number in range 0-16777215 **OID** 1.3.6.1.4.1.3181.10.6.2.82.4.1.6 (filterConfigFabricAttachISid)
erps_id	All filter entries with the same erps_id will share an ERPS Ring. A value of 0 indicates that ERPS is not used for this VLAN. Note: ERPS and MSTP may not be combined for a given VLAN. **Value** Number in range 0-255 **OID** 1.3.6.1.4.1.3181.10.6.2.82.4.1.7 (filterConfigErpsId)
port_members	Defines port memberships for VLAN. Syntax: slot/port, slot/port or use hex value for quick setup = 0x3f (ports 1-6) **Value** PORTMASK0-0xFFFFFFFF **OID** 1.3.6.1.4.1.3181.10.6.2.82.4.1.8 (filterConfigPortMembers)
management_members	Defines the port membership for the internal management port(s). **Values** *NONE* Internal management ports are not a member of this VLAN. *CPU_1* Internal management port is a member of this VLAN. *CPU_2* Second internal CPU port is member of this VLAN. Note: This setting is only valid for devices with two internal CPU ports. *ALL* All available internal management ports are member of this VLAN. **OID** 1.3.6.1.4.1.3181.10.6.2.82.4.1.9 (filterConfigManagementMembers)
priority_override	When enabled the priority value of packets tagged with this VLAN is overwritten with the new_priority value. **Values** enabled, disabled **OID** 1.3.6.1.4.1.3181.10.6.2.82.4.1.10 (filterConfigPriorityOverride)

©2026 MICROSENS GmbH & Co. KG - Hamm/Germany - www.microsens.com

new_priority	VLAN priority value when priority_override is enabled. **Values** *PRIORITY_0* Background (lowest) *PRIORITY_1* Best Effort *PRIORITY_2* Excellent Effort *PRIORITY_3* Critical Applications *PRIORITY_4* Video *PRIORITY_5* Voice *PRIORITY_6* Internetwork Control *PRIORITY_7* Network Control (highest) **OID** 1.3.6.1.4.1.3181.10.6.2.82.4.1.11 (filterConfigNewPriority)

Group	**mvrp_port_config**, for each port[0..24]
Path	Protocol.VLAN.mvrp_port_config[port]
Description	Configuration parameter concerning the port specific MVRP settings.

enable_mvrp	Enable MVRP (Multiple VLAN Registration Protocol) on this port. **Values** enabled, disabled **OID** 1.3.6.1.4.1.3181.10.6.2.82.6.1.2 (mvrpPortConfigEnableMvrp) 1.3.111.2.802.1.1.4.1.4.5.1.4 (ieee8021QBridgePortMvrpEnabledStatus)
registration_mode	Configuration of the MVRP registration mode. **Values** *NORMAL* Normal registration mode *FIXED* Fixed registration mode *FORBIDDEN* An interface in forbidden registration mode does not participate in MVRP even if MVRP is enabled on the switch **OID** 1.3.6.1.4.1.3181.10.6.2.82.6.1.3 (mvrpPortConfigRegistrationMode)
join_timer	Number of milliseconds that the interface must wait before sending MVRP PDUs. **Value** Number in range 0-0xFFFFFFFF **OID** 1.3.6.1.4.1.3181.10.6.2.82.6.1.4 (mvrpPortConfigJoinTimer)
leave_timer	Number of milliseconds that the switch retains a VLAN in the Leave state before the VLAN is unregistered. At a minimum, set the leave-timer interval at twice the join-timer interval. **Value** Number in range 0-0xFFFFFFFF **OID** 1.3.6.1.4.1.3181.10.6.2.82.6.1.5 (mvrpPortConfigLeaveTimer)
leaveall_timer	Number of milliseconds between the sending of Leave All messages. **Value** Number in range 0-0xFFFFFFFF **OID** 1.3.6.1.4.1.3181.10.6.2.82.6.1.6 (mvrpPortConfigLeaveallTimer)

©2026 MICROSENS GmbH & Co. KG - Hamm/Germany - www.microsens.com

Group	**fabric_attach_port_config**, for each port[0..24]
Path	Protocol.VLAN.fabric_attach_port_config[port]
Description	Configuration parameter controlling the fabric attach feature. Each port can be configured individually.

enable_fabric_attach

Shortest path bridging (SPB) fabric attach feature can be used to simplify configuration in an SBP enabled network. Please also generally enable the LLDP function to use this feature. When enabled the port will act as client to a fabric attach network.

Values enabled, disabled

OID 1.3.6.1.4.1.3181.10.6.2.82.7.1.2 (fabricAttachPortConfigEnableFabricAttach)

msg_authentication

when enabled message authentication using the fa_auth key is used.

Values enabled, disabled

OID 1.3.6.1.4.1.3181.10.6.2.82.7.1.3 (fabricAttachPortConfigMsgAuthentication)

learn_fabric_attach_info

When enabled FA information sent out from downstream devices are stored and forwarded to the network on behalf of the other device.

Values enabled, disabled

OID 1.3.6.1.4.1.3181.10.6.2.82.7.1.4 (fabricAttachPortConfigLearnFabricAttachInfo)

learn_management_vlan

When enabled the management VLAN of the device can dynamically be configured via FA.

Values

DISABLED	Managment VLAN cannot be altered via FA
ENABLED	Managment VLAN setting via FA is accepted unconditionally
FROM_UPLINK	Managment VLAN setting via FA is accepted when incoming on a port with port role UPLINK

OID 1.3.6.1.4.1.3181.10.6.2.82.7.1.5 (fabricAttachPortConfigLearnManagementVlan)

enter_fa_auth_key

Enter the fabric attach authentication keys required to access the network. No spaces are permitted.

Action Excecute command with parameter string max. 32 characters.

OID 1.3.6.1.4.1.3181.10.6.2.82.7.1.6 (fabricAttachPortConfigEnterFaAuthKey)

©2026 MICROSENS GmbH & Co. KG - Hamm/Germany - www.microsens.com

encrypted_fa_auth_key	Encrypted form of the entered key. This is automatically filled in when the enter_fa_auth command is executed. **Value** String, max. 128 characters. **OID** 1.3.6.1.4.1.3181.10.6.2.82.7.1.7 (fabricAttachPortConfigEncryptedFaAuthKey)

Group	**vlan_id_config**
Path	Protocol.VLAN.vlan_id_config
Description	This section defines some default VLAN settings.

management_vlan_id	VLAN ID for internal management port. Packets sent by the management agent are tagged with this VLAN ID, **Value** Number in range 0-4095 **OID** 1.3.6.1.4.1.3181.10.6.2.82.2.1.2 (vlanIdConfigManagementVlanId)
management_priority	VLAN Priority for internal management port. Packets sent by the internal management agent are tagged with this priority value. **Values** *PRIORITY_0* Background (lowest) *PRIORITY_1* Best Effort *PRIORITY_2* Excellent Effort *PRIORITY_3* Critical Applications *PRIORITY_4* Video *PRIORITY_5* Voice *PRIORITY_6* Internetwork Control *PRIORITY_7* Network Control (highest) **OID** 1.3.6.1.4.1.3181.10.6.2.82.2.1.3 (vlanIdConfigManagementPriority)
voice_vlan_id	Voice VLAN ID. Special VLAN for IP phones. **Value** Number in range 0-4095 **OID** 1.3.6.1.4.1.3181.10.6.2.82.2.1.4 (vlanIdConfigVoiceVlanId)
rstp_vlan_id	RSTP VLAN ID. When using single instance Spanning Tree (STP or RSTP) in combination with VLANs, all spanning tree messages are tagged with this VLAN ID. **Value** Number in range 0-4095 **OID** 1.3.6.1.4.1.3181.10.6.2.82.2.1.5 (vlanIdConfigRstpVlanId)

©2026 MICROSENS GmbH & Co. KG - Hamm/Germany - www.microsens.com

unauthorized_vlan_id	When using port access control with dynamic VLANs, unauthorized ports are attached to this VLAN. **Value** Number in range 0-4095 **OID** 1.3.6.1.4.1.3181.10.6.2.82.2.1.6 (vlanIdConfigUnauthorizedVlanId)
smartoffice_vlan_id	VLAN ID used for SmartOffice control traffic between director and controllers. Also used by the SmartOffice GUI. **Value** Number in range 0-4095 **OID** 1.3.6.1.4.1.3181.10.6.2.82.2.1.7 (vlanIdConfigSmartofficeVlanId)

©2026 MICROSENS GmbH & Co. KG - Hamm/Germany - www.microsens.com

27.5 VLAN Status Parameters

Group	**General Parameters**
Path	Protocol.VLAN
number_of_entries	Number of VLAN entries in the table. **Value** Number in range 0-65535 **OID** 1.3.6.1.4.1.3181.10.6.2.82.100 (vlanNumberOfEntries) 1.3.6.1.2.1.17.7.1.1.4 (dot1qNumVlans)
dynamic_management_vlan	The active VLAN used to access the internal managment interface **Value** Number in range 0-65535 **OID** 1.3.6.1.4.1.3181.10.6.2.82.101 (vlanDynamicManagementVlan)

Group	**status**, for all VLAN filters [0..255]
Path	Protocol.VLAN.status[VLAN_id]
Description	This table lists the status of all defined VLANs.
vlan_id	VLAN identifier **Value** Number in range 0-65535 **OID** 1.3.6.1.4.1.3181.10.6.2.82.102.1.2 (statusVlanId)
time_mark	**Value** Number in range 0-0xFFFFFFFF **OID** 1.3.6.1.4.1.3181.10.6.2.82.102.1.3 (statusTimeMark)
alias	Contains the alias name for static entries. **Value** String, max. 32 characters. **OID** 1.3.6.1.4.1.3181.10.6.2.82.102.1.4 (statusAlias) 1.3.6.1.2.1.17.7.1.4.3.1.1 (dot1qVlanStaticName)
port_members	Lists all ports that belong to this VLAN. **Value** PORTMASK0-0xFFFFFFFF **OID** 1.3.6.1.4.1.3181.10.6.2.82.102.1.5 (statusPortMembers)
filter_database	filter data base **Value** Number in range 0-0xFFFFFFFF **OID** 1.3.6.1.4.1.3181.10.6.2.82.102.1.6 (statusFilterDatabase) 1.3.6.1.2.1.17.7.1.4.2.1.3 (dot1qVlanFdbId)

©2026 MICROSENS GmbH & Co. KG - Hamm/Germany - www.microsens.com

egress_ports	The set of ports which are transmitting traffic for this VLAN as either tagged or untagged frames. **Value** PORTMASK0-0xFFFFFFFF **OID** 1.3.6.1.4.1.3181.10.6.2.82.102.1.7 (statusEgressPorts) 1.3.6.1.2.1.17.7.1.4.2.1.4 (dot1qVlanCurrentEgressPorts) 1.3.6.1.2.1.17.7.1.4.3.1.2 (dot1qVlanStaticEgressPorts)
untagged_ports	The set of ports which are transmitting traffic for this VLAN as untagged frames. **Value** PORTMASK0-0xFFFFFFFF **OID** 1.3.6.1.4.1.3181.10.6.2.82.102.1.8 (statusUntaggedPorts) 1.3.6.1.2.1.17.7.1.4.2.1.5 (dot1qVlanCurrentUntaggedPorts) 1.3.6.1.2.1.17.7.1.4.3.1.4 (dot1qVlanStaticUntaggedPorts)
mstp_egress_ports	The set of ports which are transmitting traffic for this VLAN as provided by the MSTP protocol as either tagged or untagged frames. **Value** PORTMASK0-0xFFFFFFFF **OID** 1.3.6.1.4.1.3181.10.6.2.82.102.1.9 (statusMstpEgressPorts)
fabric_attach_state	Indicates if auto attachment to the fabric was successful. **Values** *DISABLED* Fabric Attach feature is not enabled *ACTIVE* This VLAN is successfully attached *REJECTED* This VLAN was not attached *PENDING* This network has not responded *UNKNOWN* The state is unknown **OID** 1.3.6.1.4.1.3181.10.6.2.82.102.1.10 (statusFabricAttachState)
fabric_attach_i_sid	This indicates the VLAN to I-SID binding when the shortest path bridging (SPB) fabric attach feature is used. **Value** Number in range 0-0xFFFFFFFF **OID** 1.3.6.1.4.1.3181.10.6.2.82.102.1.11 (statusFabricAttachISid)
creation_mode	Indicates by which means this VLAN entry was created. **Values** *FILTER_TABLE* Static and permanent definition using the vlan_filter table *PACC* Dynamically allocated through port access control and RADIUS response *MVRP* Dynamically allocated through MVRP protocol *LLDP* Dynamically allocated through LLDP protocol **OID** 1.3.6.1.4.1.3181.10.6.2.82.102.1.12 (statusCreationMode) 1.3.6.1.2.1.17.7.1.4.2.1.6 (dot1qVlanStatus)
creation_source_port	The port from which a message for a dynamically assigned VLAN was created. **Value** PORTMASK0-0xFFFFFFFF **OID** 1.3.6.1.4.1.3181.10.6.2.82.102.1.13 (statusCreationSourcePort)

©2026 MICROSENS GmbH & Co. KG - Hamm/Germany - www.microsens.com

creation_time	The value of system.uptime when this VLAN was created. **Value** PERIOD0-0xFFFFFFFF **OID** 1.3.6.1.4.1.3181.10.6.2.82.102.1.14 (statusCreationTime) 1.3.6.1.2.1.17.7.1.4.2.1.7 (dot1qVlanCreationTime)

Group	**port_status**, for each port[0..24]
Path	Protocol.VLAN.port_status[port]
Description	Port related view of the currently active VLAN setup.

assigned_vlan_ids	List of all VLAN ids that are configured or dynamically assigned to this port. **Value** String, max. 1024 characters. **OID** 1.3.6.1.4.1.3181.10.6.2.82.103.1.2 (portStatusAssignedVlanIds)
dynamic_default_vlan_id	Indicates the current port default VLAN. The value may change due to port authentication or configuration. **Value** Number in range 0-65535 **OID** 1.3.6.1.4.1.3181.10.6.2.82.103.1.3 (portStatusDynamicDefaultVlanId)
last_update_method	Indicates what caused the last VLAN reconfiguration. **Values** *CONFIG* The values reflect the static configuration settings. *VIA_MAC_TABLE* VLAN set while authenticated via match to local mac_table *MAC_VIA_RADIUS* VLAN set while authenticated via a RADIUS server *802_1X_VIA_RADIUS* VLAN set while authenticated via using 802.1X protocol. The login was authenticated by a RADIUS server. **OID** 1.3.6.1.4.1.3181.10.6.2.82.103.1.4 (portStatusLastUpdateMethod)
last_updating_mac	Indicates which MAC address, if any, was involve in changing the VLAN setting for this port last. **Format** MAC Address *hh-hh-hh-hh-hh-hh* (*hh* = hexadecimal number between 00 to ff) **OID** 1.3.6.1.4.1.3181.10.6.2.82.103.1.5 (portStatusLastUpdatingMac)
last_update_time	Indicates the time when the VLAN settings were last changed. **Value** TIMESTAMP0-0xFFFFFFFF **OID** 1.3.6.1.4.1.3181.10.6.2.82.103.1.6 (portStatusLastUpdateTime)

©2026 MICROSENS GmbH & Co. KG - Hamm/Germany - www.microsens.com

Group	**mvrp_status**, for each port[0..24]
Path	Protocol.VLAN.mvrp_status[port]
Description	This table lists MVRP status information.

last_source_mac	The Source MAC Address of the last MVRP message received on this port. **Format** MAC Address *hh-hh-hh-hh-hh-hh* (*hh* = hexadecimal number between 00 to ff) **OID** 1.3.6.1.4.1.3181.10.6.2.82.104.1.2 (mvrpStatusLastSourceMac) 1.3.111.2.802.1.1.4.1.4.5.1.6 (ieee8021QBridgePortMvrpLastPduOrigin)
failed_registrations	The total number of failed MVRP registrations, for any reason, on this port. **Value** Number in range 0-0xFFFFFFFF **OID** 1.3.6.1.4.1.3181.10.6.2.82.104.1.3 (mvrpStatusFailedRegistrations) 1.3.111.2.802.1.1.4.1.4.5.1.5 (ieee8021QBridgePortMvrpFailedRegistrations)

©2026 MICROSENS GmbH & Co. KG - Hamm/Germany - www.microsens.com

28 Quality of Service (QoS)

28.1 Key Features

Priority Queues

4 priority queues per port.

Prioritization Scheme

Strict priority (higher priority always first) or weighted fair queuing (8:4:2:1 highest to lowest).

Layer1 Priority

Static priority queue can be assigned for each port.

Layer2 Priority (802.1p)

Incoming packets are forwarded according to the priority code point in their VLAN tag. The 8 VLAN priority code points can be individually mapped on the 4 priority queues.

Layer3 Priority (IPv4 / IPv6)

Incoming packets are forwarded according to the value of the DiffServ Codepoint (IPv4) / TrafficClass (IPv6) in their IP header. Maximum 64 codepoints are supported. For each code point the corresponding priority queue can be mapped.

Egress Rate Shaping

Egress rate shaping may be used to limit the data traffic coming out of a port. (bandwidth limitation)

Rate shaping can be used to limit the traffic burden an attached device needs to handle.

Ingress Rate Shaping

Ingress rate shaping may be used to limit the amount of data traffic an access port can accept. (bandwidth limitation)

28.2 Functional Description

When enabled, all packets entering the switch are classified for their priority class and placed into the corresponding output queues. The switch hardware supports 4 queues per port to handle four different traffic priorities.

28.2.1 Classification

Prioritisation marking with a higher number of priorites are mapped on these four queues. The mapping can be configured for different methods.

For classification of the priority of incomming packets, the following methods are supported:

©2026 MICROSENS GmbH & Co. KG - Hamm/Germany - www.microsens.com

DiffServ Codepoint (Layer 3)

The content of the TOS field of the IP header is interpreted as Differentiated Services Codepoint (DSCP) value. For each DSCP (0-63) an individual mapping on the device internal 4 queues is defined.

802.1p VLAN priority field (Layer 2)

The content of the priority field of the VLAN tag is interpreted as priority value. For each VLAN priority value (0-7) an individual mapping on the device internal 4 queues is defined.

Port based priority (Layer 1)

The port the packet is received is interpreted as priority value. For each device port an individual priority directly mapped on the corresponding internal queue is defined.

28.2.2 Prioritisation

When classified, the packet is placed into the corresponding queue of the outgoing port. The transmission scheme of these queues can be selected:

Weighted prioritisation scheme

The content of the 4 queues is sent out with a ratio of 8:4:2:1. This means that when 8 packets of the highest priority queue (queue 3) are sent out, 4 packets of the second highest queue are sent out, then 2 of the second lowest and one of the lowest queue (queue 0). This ensures that highly congested queues do not block lower queues completely.

©2026 MICROSENS GmbH & Co. KG - Hamm/Germany - www.microsens.com

28.3 QOS CLI Command Reference

The following table lists all CLI commands applicable for this feature section. For each parameter, the access mode is given:

R = Read Only, R/W = Read/Write, X = Executable Action.

Please note that the effective access rights are dependent on the login level of the user.

Category	Group	Table	ParameterOptions	Access	Description
Protocol.					
	qos.				Quality of Service priority queues
			enable_qos	R/W	Generally enables quality of service functions.
		config[PORT].			This section configures the base QOS settings.
			enable_802dot1p	R/W	Enable prioritization of received packets based on their VLAN priority value according to IEEE 802.1p.
			enable_diffserv	R/W	Enable prioritization of received packets based on the DSCP value in their IP header.
			priority_scheme	R/W	Selection of prioritization method.
			force_default_priority_queue	R/W	When enabled the default_priority_queue value is used for this port.
			default_priority_queue	R/W	Default priority value for port. Received packets are handled according to this setting if VLAN tag and IP header priority is disabled.
		internal.			This section configures the base QOS settings for internal backplane slot to slot connections.
			enable_802dot1p	R/W	Enable prioritization of received packets based on their VLAN priority value according to IEEE 802.1p.
			enable_diffserv	R/W	Enable prioritization of received packets based on the DSCP value in their IP header.
			prioritise_802dot1p	R/W	When both diffserv and 802.1p tags are available use 802.1p.
			priority_scheme	R/W	Selection of prioritization method.
		ieee_802dot1p_prio_mapping.			Mapping of the 8 VLAN priority values on the device internal 4 queues (0-3). 802.1p mapping: Prio 0-7 on Queues 1/0/0/1/2/2/3/3.
			tag_0	R/W	Default value: QUEUE_1
			tag_1	R/W	Default value: QUEUE_0
			tag_2	R/W	Default value: QUEUE_0
			tag_3	R/W	Default value: QUEUE_1
			tag_4	R/W	Default value: QUEUE_2

©2026 MICROSENS GmbH & Co. KG - Hamm/Germany - www.microsens.com

	tag_5	R/W	Default value: QUEUE_2
	tag_6	R/W	Default value: QUEUE_3
	tag_7	R/W	Default value: QUEUE_3
diffserv_prio_mapping[64].			
	dscp	R/W	Mapping of the 64 DiffServ Codepoints (0-63) on the device internal queues.
rate_shaping[PORT].			This section defines optional bandwidth limiting features.
	egress_bandwidth_percent	R/W	Limits the outgoing frame rate by extending the interframe gap. Egress rate shaping is independent of the frame type. Provide a percentage value of the selected port data rate. Set to 0 or 100 for unlimited normal operation.
	ingress_unicast_percent	R/W	Limits the incoming unicast frame rate. Excess unicast frames are dropped and lead to port flow control frames. Provide a percentage value of the selected port data rate. Set to 0 or 100 for unlimited normal operation.
	ingress_multicast_percent	R/W	Limits the incoming multicast frame rate. Excess multicast frames are dropped. Provide a percentage value of the selected port data rate. Set to 0 or 100 for unlimited normal operation.
	ingress_broadcast_percent	R/W	Limits the incoming broadcast frame rate. Excess broadcast frames are dropped. Provide a percentage value of the selected port data rate. Set to 0 or 100 for unlimited normal operation.
	ingress_user_1_percent	R/W	Limits the incoming frames as defined for this group. Excess broadcast frames are dropped. Provide a percentage value of the selected port data rate. Set to 0 or 100 for unlimited normal operation.
	ingress_user_2_percent	R/W	Limits the incoming frames as defined for this group. Excess broadcast frames are dropped. Provide a percentage value of the selected port data rate. Set to 0 or 100 for unlimited normal operation.
	user_1_frame_types	R/W	Select for which frame types ingress rate shaping should be applied.
	user_2_frame_types	R/W	Select for which frame types ingress rate shaping should be applied and which leads to port flow control frames.
	egress_multicast_filter	R/W	Suppress multicast traffic to egress on this port. This parameter cannot be used in combination with IGMP snooping.

©2026 MICROSENS GmbH & Co. KG - Hamm/Germany - www.microsens.com

28.4 QOS Configuration Parameters

Group	**General Parameters**
Path	Protocol.QOS

enable_qos	Generally enables quality of service functions. **Values** enabled, disabled **OID** 1.3.6.1.4.1.3181.10.6.2.83.1 (qosEnableQos)

Group	**config**, for each port[0..24]
Path	Protocol.QOS.config[port]
Description	This section configures the base QOS settings.

enable_802dot1p	Enable prioritization of received packets based on their VLAN priority value according to IEEE 802.1p. **Values** enabled, disabled **OID** 1.3.6.1.4.1.3181.10.6.2.83.2.1.2 (configEnable802dot1p)
enable_diffserv	Enable prioritization of received packets based on the DSCP value in their IP header. **Values** enabled, disabled **OID** 1.3.6.1.4.1.3181.10.6.2.83.2.1.3 (configEnableDiffserv)
priority_scheme	Selection of prioritization method. **Values** *WEIGHTED* Weighted prioritization of queues (ratio 8:4:2:1) *STRICT* Highest priority queue is always transmitted first **OID** 1.3.6.1.4.1.3181.10.6.2.83.2.1.4 (configPriorityScheme)
force_default_priority_queue	When enabled the default_priority_queue value is used for this port. **Values** enabled, disabled **OID** 1.3.6.1.4.1.3181.10.6.2.83.2.1.5 (configForceDefaultPriorityQueue)

©2026 MICROSENS GmbH & Co. KG - Hamm/Germany - www.microsens.com

default_priority_queue	Default priority value for port. Received packets are handled according to this setting if VLAN tag and IP header priority is disabled. **Values** *QUEUE_0* Lowest priority *QUEUE_1* Default priority *QUEUE_2* Second highest priority *QUEUE_3* Highest priority **OID** 1.3.6.1.4.1.3181.10.6.2.83.2.1.6 (configDefaultPriorityQueue)

Group	**diffserv_prio_mapping**, for all DiffServ CodePoints [0..63]
Path	Protocol.QOS.diffserv_prio_mapping[diffserv_codepoint]
Description	

dscp	Mapping of the 64 DiffServ Codepoints (0-63) on the device internal queues. **Values** *QUEUE_0* Lowest priority *QUEUE_1* Default priority *QUEUE_2* Second highest priority *QUEUE_3* Highest priority **OID** 1.3.6.1.4.1.3181.10.6.2.83.5.1.2 (diffservPrioMappingDscp)

Group	**rate_shaping**, for each port[0..24]
Path	Protocol.QOS.rate_shaping[port]
Description	This section defines optional bandwidth limiting features.

egress_bandwidth_percent	Limits the outgoing frame rate by extending the interframe gap. Egress rate shaping is independent of the frame type. Provide a percentage value of the selected port data rate. Set to 0 or 100 for unlimited normal operation. **Value** Number in range 0-100 **OID** 1.3.6.1.4.1.3181.10.6.2.83.6.1.2 (rateShapingEgressBandwidthPercent)
ingress_unicast_percent	Limits the incoming unicast frame rate. Excess unicast frames are dropped and lead to port flow control frames. Provide a percentage value of the selected port data rate. Set to 0 or 100 for unlimited normal operation. **Value** Number in range 0-100 **OID** 1.3.6.1.4.1.3181.10.6.2.83.6.1.3 (rateShapingIngressUnicastPercent)

©2026 MICROSENS GmbH & Co. KG - Hamm/Germany - www.microsens.com

ingress_multicast_percent	Limits the incoming multicast frame rate. Excess multicast frames are dropped. Provide a percentage value of the selected port data rate. Set to 0 or 100 for unlimited normal operation. **Value** Number in range 0-100 **OID** 1.3.6.1.4.1.3181.10.6.2.83.6.1.4 (rateShapingIngressMulticastPercent)
ingress_broadcast_percent	Limits the incoming broadcast frame rate. Excess broadcast frames are dropped. Provide a percentage value of the selected port data rate. Set to 0 or 100 for unlimited normal operation. **Value** Number in range 0-100 **OID** 1.3.6.1.4.1.3181.10.6.2.83.6.1.5 (rateShapingIngressBroadcastPercent)
ingress_user_1_percent	Limits the incoming frames as defined for this group. Excess broadcast frames are dropped. Provide a percentage value of the selected port data rate. Set to 0 or 100 for unlimited normal operation. **Value** Number in range 0-100 **OID** 1.3.6.1.4.1.3181.10.6.2.83.6.1.6 (rateShapingIngressUser1Percent)
ingress_user_2_percent	Limits the incoming frames as defined for this group. Excess broadcast frames are dropped. Provide a percentage value of the selected port data rate. Set to 0 or 100 for unlimited normal operation. **Value** Number in range 0-100 **OID** 1.3.6.1.4.1.3181.10.6.2.83.6.1.7 (rateShapingIngressUser2Percent)
user_1_frame_types	Select for which frame types ingress rate shaping should be applied. **Values** *DISABLED* No special frame checking *ARP* Select ARP related frame to prevent malicious ARP flooding *TCP_CONTROL* Limit TCP control frames to prevent certain denial of service attacks *ARP_AND_TCP_CTRL* Limit ARP and TCP control frames to help prevent denial of service attacks **OID** 1.3.6.1.4.1.3181.10.6.2.83.6.1.8 (rateShapingUser1FrameTypes)

©2026 MICROSENS GmbH & Co. KG - Hamm/Germany - www.microsens.com

user_2_frame_types	Select for which frame types ingress rate shaping should be applied and which leads to port flow control frames. **Values** *DISABLED* — No special frame checking *UDP_DATA* — Limit UDP data traffic *TCP_DATA* — Limit TCP data traffic *UDP_AND_TCP_DATA* — Limit UDP and TCP data traffic *NON_UDP_TCP_DATA* — Limit traffic which is neither based on UDP nor on TCP **OID** 1.3.6.1.4.1.3181.10.6.2.83.6.1.9 (rateShapingUser2FrameTypes)
egress_multicast_filter	Suppress multicast traffic to egress on this port. This parameter cannot be used in combination with IGMP snooping. **Values** enabled, disabled **OID** 1.3.6.1.4.1.3181.10.6.2.83.6.1.10 (rateShapingEgressMulticastFilter)

Group	**internal**
Path	Protocol.QOS.internal
Description	This section configures the base QOS settings for internal backplane slot to slot connections.

enable_802dot1p	Enable prioritization of received packets based on their VLAN priority value according to IEEE 802.1p. **Values** enabled, disabled **OID** 1.3.6.1.4.1.3181.10.6.2.83.3.1.2 (internalEnable802dot1p)
enable_diffserv	Enable prioritization of received packets based on the DSCP value in their IP header. **Values** enabled, disabled **OID** 1.3.6.1.4.1.3181.10.6.2.83.3.1.3 (internalEnableDiffserv)
prioritise_802dot1p	When both diffserv and 802.1p tags are available use 802.1p. **Values** enabled, disabled **OID** 1.3.6.1.4.1.3181.10.6.2.83.3.1.4 (internalPrioritise802dot1p)
priority_scheme	Selection of prioritization method. **Values** *WEIGHTED* — Weighted prioritization of queues (ratio 8:4:2:1) *STRICT* — Highest priority queue is always transmitted first **OID** 1.3.6.1.4.1.3181.10.6.2.83.3.1.5 (internalPriorityScheme)

©2026 MICROSENS GmbH & Co. KG - Hamm/Germany - www.microsens.com

Group	**ieee_802dot1p_prio_mapping**
Path	Protocol.QOS.ieee_802dot1p_prio_mapping
Description	Mapping of the 8 VLAN priority values on the device internal 4 queues (0-3). 802.1p mapping: Prio 0-7 on Queues 1/0/0/1/2/2/3/3.

tag_0	Default value: QUEUE_1	
	Values	*QUEUE_0* Lowest priority *QUEUE_1* Default priority *QUEUE_2* Second highest priority *QUEUE_3* Highest priority
	OID	1.3.6.1.4.1.3181.10.6.2.83.4.1.2 (ieee802dot1pPrioMappingTag0)
tag_1	Default value: QUEUE_0	
	Values	*QUEUE_0* Lowest priority *QUEUE_1* Default priority *QUEUE_2* Second highest priority *QUEUE_3* Highest priority
	OID	1.3.6.1.4.1.3181.10.6.2.83.4.1.3 (ieee802dot1pPrioMappingTag1)
tag_2	Default value: QUEUE_0	
	Values	*QUEUE_0* Lowest priority *QUEUE_1* Default priority *QUEUE_2* Second highest priority *QUEUE_3* Highest priority
	OID	1.3.6.1.4.1.3181.10.6.2.83.4.1.4 (ieee802dot1pPrioMappingTag2)
tag_3	Default value: QUEUE_1	
	Values	*QUEUE_0* Lowest priority *QUEUE_1* Default priority *QUEUE_2* Second highest priority *QUEUE_3* Highest priority
	OID	1.3.6.1.4.1.3181.10.6.2.83.4.1.5 (ieee802dot1pPrioMappingTag3)

©2026 MICROSENS GmbH & Co. KG - Hamm/Germany - www.microsens.com

tag_4	Default value: QUEUE_2	
	Values	*QUEUE_0* Lowest priority *QUEUE_1* Default priority *QUEUE_2* Second highest priority *QUEUE_3* Highest priority
	OID	1.3.6.1.4.1.3181.10.6.2.83.4.1.6 (ieee802dot1pPrioMappingTag4)
tag_5	Default value: QUEUE_2	
	Values	*QUEUE_0* Lowest priority *QUEUE_1* Default priority *QUEUE_2* Second highest priority *QUEUE_3* Highest priority
	OID	1.3.6.1.4.1.3181.10.6.2.83.4.1.7 (ieee802dot1pPrioMappingTag5)
tag_6	Default value: QUEUE_3	
	Values	*QUEUE_0* Lowest priority *QUEUE_1* Default priority *QUEUE_2* Second highest priority *QUEUE_3* Highest priority
	OID	1.3.6.1.4.1.3181.10.6.2.83.4.1.8 (ieee802dot1pPrioMappingTag6)
tag_7	Default value: QUEUE_3	
	Values	*QUEUE_0* Lowest priority *QUEUE_1* Default priority *QUEUE_2* Second highest priority *QUEUE_3* Highest priority
	OID	1.3.6.1.4.1.3181.10.6.2.83.4.1.9 (ieee802dot1pPrioMappingTag7)

©2026 MICROSENS GmbH & Co. KG - Hamm/Germany - www.microsens.com

29 Rapid Spanning Tree Protocol (RSTP)

29.1 Key Features

Spanning Tree (STP)

Automatic detection of loops and redundant network paths. Single STP instance running in configurable VLAN.

Rapid Spanning Tree (RSTP)

Automatic detection of loops and redundant network paths. Rapid Spanning Tree Protocol (RSTP) is backwards compatible to Spanning Tree standard (STP) but uses a faster algorithm.

Multiple Spanning Tree (MSTP)

Up to 64 STP instances running in configurable VLAN groups.

BPDU Guard

BPDU guard monitors if STP protocol is running on a local access port and removes such packets. Option to shut down the port for security or to just send an event.

This function ensures that no user can accidentally or purposefully hijack all data traffic to path through his computer.

Bridge Assurance

Detects unidirectional link failures that may occur with fiber optic links whereby one fiber direction breaks.

This function ensures that the root bridge does not make false detection about the traffic path under fiber failure conditions.

29.2 Functional Description

29.2.1 Rapid Spanning Tree Protocol (RSTP)

The Spanning Tree Protocol (STP), defined in the IEEE Standard 802.1D, creates a spanning tree within a mesh network of connected layer-2 bridges (typically Ethernet switches) and disables the links which are not part of that tree, leaving a single active path between any two network nodes.

29.2.2 Basic Spanning Tree Operation

Multiple active paths between network nodes cause a bridge loop. Bridge loops create several problems. First, the MAC address table used by the switch or bridge can fail, since the same MAC addresses (and hence the same network hosts) are seen on multiple ports. Second, a broadcast storm occurs. This is caused by broadcast packets being forwarded in an endless loop between switches. A broadcast storm can consume all available CPU resources and bandwidth.

Spanning tree allows a network design to include spare (redundant) links to provide automatic backup paths if an active link fails, without the danger of bridge loops, or the need for manually enabling/disabling these backup links.

©2026 MICROSENS GmbH & Co. KG - Hamm/Germany - www.microsens.com

29.2.3 Rapid Spanning Tree Improvement

To provide faster spanning tree convergence after a topology change, an evolution of the Spanning Tree Protocol: Rapid Spanning Tree Protocol (RSTP), introduced by IEEE with document 802.1w. RSTP, is a refinement of STP; therefore, it shares most of its basic operation characteristics. This essentially creates a cascading effect away from the root bridge where each designated bridge proposes to its neighbors to determine if it can make a rapid transition. This is one of the major elements which allows RSTP to achieve faster convergence times than STP.

©2026 MICROSENS GmbH & Co. KG - Hamm/Germany - www.microsens.com

29.3 STP CLI Command Reference

The following table lists all CLI commands applicable for this feature section. For each parameter, the access mode is given:

R = Read Only, R/W = Read/Write, X = Executable Action.

Please note that the effective access rights are dependent on the login level of the user.

Category	Group	Table	Parameter	Options	Access	Description
Protocol.						
	stp.					Spanning Tree (STP), Rapid STP (RSTP) protocol and Multiple STP (MSTP) Protocol
		bridge_config.				Configuration parameter concerning the general bridge settings
			mode		R/W	Set base operating mode of spanning tree protocol.
			priority		R/W	The value of the writeable portion of the Bridge ID.
			hello_time		R/W	The amount of time between the transmission of Configuration bridge PDUs by this node on any port when it is the root of the spanning tree, or trying to become so, in seconds.
			max_age		R/W	The maximum age of Spanning Tree Protocol information learned from the network on any port before it is discarded, in seconds.
			forward_delay		R/W	Bridge forward delay in seconds.
			tx_hold_count		R/W	Limits the maximum transmission rate.
			ieee_path_cost_mode		R/W	Defines to which standard the admin_path_cost are compliant.
			mstp_region_name		R/W	
			mstp_revision_level		R/W	
			mstp_max_hops		R/W	Defines the initial value of remaining hops for MSTI information generated at the boundary of an MSTI region.
			mstp_stp_aging_time		R/W	This parameter is used only when MSTP is forced into STP mode for rapid aging.
		port_config[PORT].				Configuration parameter concerning the port specific STP settings
			enable		R/W	Enable (R)STP for this port.
			priority		R/W	Port priority value. 0 - 240 in steps of 16. The selected value must be divisable by 16.
			admin_p2p_port		R/W	A value of force True indicates that this port should always be treated as if it is connected to a point-to-point link. A value of force False indicates that this port should be treated as having a shared media connection.
			admin_edge_port		R/W	When enabled this port is assumed to be an edge port.

©2026 MICROSENS GmbH & Co. KG - Hamm/Germany - www.microsens.com

	admin_path_cost	R/W	The contribution of this port to the path cost of paths towards the spanning tree root which include this port.
	protocol_migration	X	When operating in RSTP mode, setting this object forces this port to transmit RSTP BPDUs.
	bridge_assurance	R/W	The bridge assurance is used to detect unidirectional link failures or remote devices that stop sending spanning tree information due to a software fault. Important: Only enable when the other directly connected switches also support this feature.
	mstp_default_priority	R/W	The port priority used in all MSTP instances unless otherwise configured in mstp_port_priority.
	mstp_port_priority	R/W	The port priority used in all specific MSTP instances. Syntax: mstp_id:port_priority. E.g.: 1:32, 2:128, 5:128
	mstp_default_admin_path_cost	R/W	The port path cost used in all MSTP instances unless otherwise configured in mstp_port_admin_path_cost.
	mstp_port_admin_path_cost	R/W	The port path cost used in specific MSTP instances. Syntax: mstp_id:port_path_cost. E.g.: 1:4, 2:100
	bpdu_guard	R/W	When enabled STP attempts from a user port are blocked. This prevents a malicious user from influencing the overall network routing.
	bpdu_receive_only	R/W	When enabled this port listens to incoming BPDU packets for spanning tree algorithm but never transmits any.
	restrict_tcn	R/W	When enabled the port does not forward topology change notification BPDUs.
	restrict_root	R/W	When enabled this port cannot become a root bridge port for the spanning tree protocol.
	unblock_port	X	Use this action to unblock a port that was blocked due to BPDU guard function.
mstp_group[DYNAMIC].			This table defines MSTP parameter that my be different between instances. The mstp_id is referenced from vlan.filter_config.mstp_group. Several VLAN may share the same MSTP group. If needed up to 63 table entries can be created.
	mstp_id	R/W	Defines filter table entry for this MSTP Group Id. This is the key value for the table. Type '=:' to edit, use index '[*] = new_id:' to add an entry. Edit string to nothing to delete entry.
	bridge_priority	R/W	The value of the writeable portion of the Bridge ID for this MSTP instance.
bridge_status.			This status table collects all bridge related status fields.
	stp_protocol	R	STP protocol specification = 3 for 802.1D.

©2026 MICROSENS GmbH & Co. KG - Hamm/Germany - www.microsens.com

	hello_time	R	The amount of time between the transmission of Configuration bridge PDUs by this node on any port when it is the root of the spanning tree, or trying to become so, in seconds. This is the actual value that this bridge is currently using.
	max_age	R	The maximum age of Spanning Tree Protocol information learned from the network on any port before it is discarded, in seconds. This is the actual value that this bridge is currently using.
	hold_time	R	This time value determines the interval length during which no more than two Configuration bridge PDUs shall be transmitted by this node, in seconds.
	forward_delay	R	This time controls how fast a port changes its spanning state when moving towards the Forwarding state. The value determines how long the port stays in each of the Listening and Learning states, which precede the Forwarding state.
	root_port	R	The port number of the port that offers the lowest cost path from this bridge to the root bridge.
	root_cost	R	The cost of the path to the root as seen from this bridge.
	topology_changes	R	The total number of topology changes detected by this bridge since the management entity was last reset or initialized.
	last_topology_change	R	The time in seconds when the last time a topology change was detected.
	mstp_region_name	R	This the region name actually used.
	msti_revision_level	R	This the revision level actually used.
	cist_internal_root_path_cost		
	cist_regional_root_id	R	The Bridge Identifier of the current CIST Regional Root
	cist_regional_root_priority	R	The Bridge priority of the current CIST Regional Root
	cist_regional_root_mac	R	The Bridge MAC of the current CIST Regional Root
	max_hops	R	
	mstp_stp_aging_time	R	Aging time of the bridge
port_status[PORT].			
	port	R	The port for which these spanning tree information apply.
	state	R	This state controls what action a port takes on reception of a frame.
	local_port_cost	R	The contribution of this port to the path cost of paths towards the spanning tree root which include this port. This is the actually used value.
	designated_port_id	R	The Port priority and identifier of the port on the Designated Bridge for this port's segment. Format: Priority:PortId.

©2026 MICROSENS GmbH & Co. KG - Hamm/Germany - www.microsens.com

	designated_port	R	The Port Identifier of the port on the Designated Bridge for this port's segment.
	designated_port_priority	R	The priority of the port on the Designated Bridge for this port's segment.
	designated_cost	R	The path cost of the Designated Port of the segment connected to this port. This value is compared to the Root Path Cost field in received bridge PDUs.
	designated_root_id	R	The priority of the Bridge recorded as the Root in the Configuration BPDUs transmitted by the Designated Bridge for the segment to which the port is connected. This is a 4-bit value included along with 12-bit of designated_root_mac as Root Bridge Identifier.
	designated_root_mac	R	This contains just the MAC part of the bridge id.
	designated_root_priority	R	This contains just the priority part of the bridge id.
	designated_bridge_id	R	The priority of the Bridge that this port considers to be the Designated Bridge for this port segment. This is a 4-bit value included along with 12-bit of designated_bridge_mac as Bridge Identifier.
	designated_bridge_mac	R	The Bridge Identifier of the bridge that this port considers to be the Designated Bridge for this port's segment.
	designated_bridge_priority	R	This contains just the priority part of the bridge id.
	forward_transition	R	The number of times this port has transitioned from the Learning state to the Forwarding state.
	oper_edge_port	R	A value of true indicates that this port should be assumed as an edge-port.
	oper_p2p_port	R	The operational point-to-point status of the LAN segment attached to this port. It indicates whether a port is considered to have a point-to-point connection.
	role	R	Assigned port role
	inconsistent_bridge	R	A value of true indicates that the port is inconsistent due to Bridge assurance.
mstp_status_table[2048].			This table contains a record for each MSTP instance and for each port thereof. Table ends with first record with mstp_id=0.
	mstp_id	R	MSTP instance this entry
	port	R	Port id of the port in relation to above MSTP instance.
	state	R	This state controls what action a port takes on reception of a frame.
	port_priority	R	
	internal_admin_path_cost	R	

©2026 MICROSENS GmbH & Co. KG - Hamm/Germany - www.microsens.com

	forward_transition	R	The number of times this port has transitioned from the Learning state to the Forwarding state.
	role	R	Assigned port role
mstp_bridge_status[63].			This status table collects all multiple spanning tree bridge related status fields.
	mstp_id	R	MSTP instance identifier.
	bridge_priority	R	Bridge priority.
	root_port	R	The port number of the port that offers the lowest cost path from this bridge to the root bridge.
	root_cost	R	The cost of the path to the root as seen from this bridge.
	max_hops	R	
	regional_root_id	R	The priority of the Bridge recorded as the Root in the Configuration BPDUs transmitted by the Designated Bridge for the segment to which the port is connected. This is a 4-bit value included along with 12-bit of designated_root_mac as Root Bridge Identifier.
	regional_root_priority	R	This contains just the MAC part of the bridge id.
	regional_root_mac	R	This contains just the priority part of the bridge id.
	topology_changes	R	The total number of topology changes detected by this most bridge instance since the management entity was last reset or initialized.
	last_topology_change	R	The time in seconds when the last time a topology change was detected.

©2026 MICROSENS GmbH & Co. KG - Hamm/Germany - www.microsens.com

29.4 STP Configuration Parameters

Group	**port_config**, for each port[0..24]
Path	Protocol.STP.port_config[port]
Description	Configuration parameter concerning the port specific STP settings

enable

Enable (R)STP for this port.

Values enabled, disabled

OID 1.3.6.1.4.1.3181.10.6.2.42.2.1.2 (portConfigEnable)
1.3.6.1.2.1.17.2.15.1.4 (dot1dStpPortEnable)

priority

Port priority value. 0 - 240 in steps of 16. The selected value must be divisable by 16.

Value Number in range 0-240

OID 1.3.6.1.4.1.3181.10.6.2.42.2.1.3 (portConfigPriority)
1.3.6.1.2.1.17.2.15.1.2 (dot1dStpPortPriority)

admin_p2p_port

A value of force True indicates that this port should always be treated as if it is connected to a point-to-point link. A value of force False indicates that this port should be treated as having a shared media connection.

Values

AUTO	
FORCE_FALSE	Indicates that this port should be treated as having a shared media connection.
FORCE_TRUE	Indicates that this port should always be treated as if it is connected to a point-to-point link.

OID 1.3.6.1.4.1.3181.10.6.2.42.2.1.4 (portConfigAdminP2pPort)
1.3.6.1.2.1.17.2.19.1.4 (dot1dStpPortAdminPointToPoint)

admin_edge_port

When enabled this port is assumed to be an edge port.

Values enabled, disabled

OID 1.3.6.1.4.1.3181.10.6.2.42.2.1.5 (portConfigAdminEdgePort)
1.3.6.1.2.1.17.2.19.1.2 (dot1dStpPortAdminEdgePort)

©2026 MICROSENS GmbH & Co. KG - Hamm/Germany - www.microsens.com

admin_path_cost	The contribution of this port to the path cost of paths towards the spanning tree root which include this port. **Value** Number in range 0-200000000 **OID** 1.3.6.1.4.1.3181.10.6.2.42.2.1.6 (portConfigAdminPathCost) 1.3.6.1.2.1.17.2.19.1.6 (dot1dStpPortAdminPathCost)
protocol_migration	When operating in RSTP mode, setting this object forces this port to transmit RSTP BPDUs. **Action** Excecute command. **OID** 1.3.6.1.4.1.3181.10.6.2.42.2.1.7 (portConfigProtocolMigration) 1.3.6.1.2.1.17.2.19.1.1 (dot1dStpPortProtocolMigration)
bridge_assurance	The bridge assurance is used to detect unidirectional link failures or remote devices that stop sending spanning tree information due to a software fault. Important: Only enable when the other directly connected switches also support this feature. **Values** enabled, disabled **OID** 1.3.6.1.4.1.3181.10.6.2.42.2.1.8 (portConfigBridgeAssurance)
mstp_default_priority	The port priority used in all MSTP instances unless otherwise configured in mstp_port_priority. **Value** Number in range 0-240 **OID** 1.3.6.1.4.1.3181.10.6.2.42.2.1.9 (portConfigMstpDefaultPriority) 1.3.6.1.2.1.17.2.19.1.1 (dot1dStpPortProtocolMigration)
mstp_port_priority	The port priority used in all specific MSTP instances. Syntax: mstp_id:port_priority. E.g.: 1:32, 2:128, 5:128 **Value** String, max. 256 characters. **OID** 1.3.6.1.4.1.3181.10.6.2.42.2.1.10 (portConfigMstpPortPriority)
mstp_default_admin_path_cost	The port path cost used in all MSTP instances unless otherwise configured in mstp_port_admin_path_cost. **Value** Number in range 0-200000000 **OID** 1.3.6.1.4.1.3181.10.6.2.42.2.1.11 (portConfigMstpDefaultAdminPathCost)
mstp_port_admin_path_cost	The port path cost used in specific MSTP instances. Syntax: mstp_id:port_path_cost. E.g.: 1:4, 2:100 **Value** String, max. 256 characters. **OID** 1.3.6.1.4.1.3181.10.6.2.42.2.1.12 (portConfigMstpPortAdminPathCost)

©2026 MICROSENS GmbH & Co. KG - Hamm/Germany - www.microsens.com

bpdu_guard	When enabled STP attempts from a user port are blocked. This prevents a malicious user from influencing the overall network routing.		
	Values	*DISABLED*	STP BPDU frames are not removed
		DROP_AND_EVENT	STP BPDU frames are removed and event is send
		BLOCK_PORT	Port is blocked when STP BPDU is detected. Needs operator intervention to unblock
	OID	1.3.6.1.4.1.3181.10.6.2.42.2.1.13 (portConfigBpduGuard)	
bpdu_receive_only	When enabled this port listens to incoming BPDU packets for spanning tree algorithm but never transmits any.		
	Values	enabled, disabled	
	OID	1.3.6.1.4.1.3181.10.6.2.42.2.1.14 (portConfigBpduReceiveOnly)	
restrict_tcn	When enabled the port does not forward topology change notification BPDUs.		
	Values	enabled, disabled	
	OID	1.3.6.1.4.1.3181.10.6.2.42.2.1.15 (portConfigRestrictTcn)	
restrict_root	When enabled this port cannot become a root bridge port for the spanning tree protocol.		
	Values	enabled, disabled	
	OID	1.3.6.1.4.1.3181.10.6.2.42.2.1.16 (portConfigRestrictRoot)	
unblock_port	Use this action to unblock a port that was blocked due to BPDU guard function.		
	Action	Excecute command.	
	OID	1.3.6.1.4.1.3181.10.6.2.42.2.1.17 (portConfigUnblockPort)	

Group	**mstp_group**, dynamical size
Path	Protocol.STP.mstp_group
Description	This table defines MSTP parameter that my be different between instances. The mstp_id is referenced from vlan.filter_config.mstp_group. Several VLAN may share the same MSTP group. If needed up to 63 table entries can be created.

©2026 MICROSENS GmbH & Co. KG - Hamm/Germany - www.microsens.com

mstp_id	Defines filter table entry for this MSTP Group Id. This is the key value for the table. Type '=:' to edit, use index '[*] = new_id:' to add an entry. Edit string to nothing to delete entry. **Value** String, max. 4 characters. **OID** 1.3.6.1.4.1.3181.10.6.2.42.3.1.2 (mstpGroupMstpId)
bridge_priority	The value of the writeable portion of the Bridge ID for this MSTP instance. **Value** Number in range 0-61440 **OID** 1.3.6.1.4.1.3181.10.6.2.42.3.1.3 (mstpGroupBridgePriority)

Group	**bridge_config**
Path	Protocol.STP.bridge_config
Description	Configuration parameter concerning the general bridge settings

mode	Set base operating mode of spanning tree protocol. **Values** *DISABLED* STP disabled *STP* Spanning Tree Protocol *RSTP* Rapid Spanning Tree Protocol *MSTP* Multiple Spanning Tree Protocol **OID** 1.3.6.1.4.1.3181.10.6.2.42.1.1.2 (bridgeConfigMode) 1.3.6.1.2.1.17.2.16 (dot1dStpVersion)
priority	The value of the writeable portion of the Bridge ID. **Value** Number in range 0-61440 **OID** 1.3.6.1.4.1.3181.10.6.2.42.1.1.3 (bridgeConfigPriority) 1.3.6.1.2.1.17.2.2 (dot1dStpPriority)
hello_time	The amount of time between the transmission of Configuration bridge PDUs by this node on any port when it is the root of the spanning tree, or trying to become so, in seconds. **Value** Number in range 1-10 **OID** 1.3.6.1.4.1.3181.10.6.2.42.1.1.4 (bridgeConfigHelloTime) 1.3.6.1.2.1.17.2.13 (dot1dStpBridgeHelloTime)
max_age	The maximum age of Spanning Tree Protocol information learned from the network on any port before it is discarded, in seconds. **Value** Number in range 6-40 **OID** 1.3.6.1.4.1.3181.10.6.2.42.1.1.5 (bridgeConfigMaxAge) 1.3.6.1.2.1.17.2.12 (dot1dStpBridgeMaxAge)

©2026 MICROSENS GmbH & Co. KG - Hamm/Germany - www.microsens.com

forward_delay	Bridge forward delay in seconds. **Value** Number in range 4-30 **OID** 1.3.6.1.4.1.3181.10.6.2.42.1.1.6 (bridgeConfigForwardDelay) 1.3.6.1.2.1.17.2.14 (dot1dStpBridgeForwardDelay)
tx_hold_count	Limits the maximum transmission rate. **Value** Number in range 1-10 **OID** 1.3.6.1.4.1.3181.10.6.2.42.1.1.7 (bridgeConfigTxHoldCount) 1.3.6.1.2.1.17.2.17 (dot1dStpTxHoldCount)
ieee_path_cost_model	Defines to which standard the admin_path_cost are compliant. **Values** *1998_COMPLIANT* IEEE-802.1D-1998 *2004_COMPLIANT* IEEE-802.1D-2004 **OID** 1.3.6.1.4.1.3181.10.6.2.42.1.1.8 (bridgeConfigIeeePathCostModel)
mstp_region_name	**Value** String, max. 32 characters. **OID** 1.3.6.1.4.1.3181.10.6.2.42.1.1.9 (bridgeConfigMstpRegionName)
mstp_revision_level	**Value** Number in range 0-65535 **OID** 1.3.6.1.4.1.3181.10.6.2.42.1.1.10 (bridgeConfigMstpRevisionLevel)
mstp_max_hops	Defines the initial value of remaining hops for MSTI information generated at the boundary of an MSTI region. **Value** Number in range 6-40 **OID** 1.3.6.1.4.1.3181.10.6.2.42.1.1.11 (bridgeConfigMstpMaxHops)
mstp_stp_aging_time	This parameter is used only when MSTP is forced into STP mode for rapid aging. **Value** Number in range 10-1000000 **OID** 1.3.6.1.4.1.3181.10.6.2.42.1.1.12 (bridgeConfigMstpStpAgingTime)

©2026 MICROSENS GmbH & Co. KG - Hamm/Germany - www.microsens.com

29.5 STP Status Parameters

Group	**port_status**, for all ports[0..31]
Path	Protocol.STP.port_status[port]
Description	

port

The port for which these spanning tree information apply.

Value PORT0-255

OID 1.3.6.1.4.1.3181.10.6.2.42.101.1.2 (portStatusPort)

state

This state controls what action a port takes on reception of a frame.

Values

UNKNOWN	Unknown
DISCARDING	Discarding state
LEARNING	Learning state
FORWARDING	Forwarding state
BLOCKING	Blocking state
LISTENING	Listening state
BROKEN	Broken state

OID 1.3.6.1.4.1.3181.10.6.2.42.101.1.3 (portStatusState)
1.3.6.1.2.1.17.2.15.1.3 (dot1dStpPortState)

local_port_cost

The contribution of this port to the path cost of paths towards the spanning tree root which include this port. This is the actually used value.

Value Number in range 0-0xFFFFFFFF

OID 1.3.6.1.4.1.3181.10.6.2.42.101.1.4 (portStatusLocalPortCost)

designated_port_id

The Port priority and identifier of the port on the Designated Bridge for this port's segment. Format: Priority:PortId.

Value String, max. 32 characters.

OID 1.3.6.1.4.1.3181.10.6.2.42.101.1.5 (portStatusDesignatedPortId)
1.3.6.1.2.1.17.2.15.1.9 (dot1dStpPortDesignatedPort)

designated_port

The Port Identifier of the port on the Designated Bridge for this port's segment.

Value Number in range 0-0xFFFFFFFF

OID 1.3.6.1.4.1.3181.10.6.2.42.101.1.6 (portStatusDesignatedPort)

©2026 MICROSENS GmbH & Co. KG - Hamm/Germany - www.microsens.com

designated_port_priority	The priority of the port on the Designated Bridge for this port's segment. **Value** Number in range 0-0xFFFFFFFF **OID** 1.3.6.1.4.1.3181.10.6.2.42.101.1.7 (portStatusDesignatedPortPriority)
designated_cost	The path cost of the Designated Port of the segment connected to this port. This value is compared to the Root Path Cost field in received bridge PDUs. **Value** Number in range 0-0xFFFFFFFF **OID** 1.3.6.1.4.1.3181.10.6.2.42.101.1.8 (portStatusDesignatedCost) 1.3.6.1.2.1.17.2.15.1.7 (dot1dStpPortDesignatedCost)
designated_root_id	The priority of the Bridge recorded as the Root in the Configuration BPDUs transmitted by the Designated Bridge for the segment to which the port is connected. This is a 4-bit value included along with 12-bit of designated_root_mac as Root Bridge Identifier. **Value** String, max. 32 characters. **OID** 1.3.6.1.4.1.3181.10.6.2.42.101.1.9 (portStatusDesignatedRootId) 1.3.6.1.2.1.172.15.1.6 (dot1dStpPortDesignatedRoot)
designated_root_mac	This contains just the MAC part of the bridge id. **Format** MAC Address *hh-hh-hh-hh-hh-hh* (*hh* = hexadecimal number between 00 to ff) **OID** 1.3.6.1.4.1.3181.10.6.2.42.101.1.10 (portStatusDesignatedRootMac)
designated_root_priority	This contains just the priority part of the bridge id. **Value** Number in range 0-65535 **OID** 1.3.6.1.4.1.3181.10.6.2.42.101.1.11 (portStatusDesignatedRootPriority)
designated_bridge_id	The priority of the Bridge that this port considers to be the Designated Bridge for this port segment. This is a 4-bit value included along with 12-bit of designated_bridge_mac as Bridge Identifier. **Value** String, max. 32 characters. **OID** 1.3.6.1.4.1.3181.10.6.2.42.101.1.12 (portStatusDesignatedBridgeId) 1.3.6.1.2.1.17.2.15.1.8 (dot1dStpPortDesignatedBridge)

©2026 MICROSENS GmbH & Co. KG - Hamm/Germany - www.microsens.com

designated_bridge_mac	The Bridge Identifier of the bridge that this port considers to be the Designated Bridge for this port's segment. **Format** MAC Address *hh-hh-hh-hh-hh-hh* (*hh* = hexadecimal number between 00 to ff) **OID** 1.3.6.1.4.1.3181.10.6.2.42.101.1.13 (portStatusDesignatedBridgeMac)
designated_bridge_priority	This contains just the priority part of the bridge id. **Value** Number in range 0-65535 **OID** 1.3.6.1.4.1.3181.10.6.2.42.101.1.14 (portStatusDesignatedBridgePriority)
forward_transition	The number of times this port has transitioned from the Learning state to the Forwarding state. **Value** Number in range 0-0xFFFFFFFF **OID** 1.3.6.1.4.1.3181.10.6.2.42.101.1.15 (portStatusForwardTransition) 1.3.6.1.2.1.17.2.15.1.10 (dot1dStpPortForwardTransitions)
oper_edge_port	A value of true indicates that this port should be assumed as an edge-port. **Values** true, false **OID** 1.3.6.1.4.1.3181.10.6.2.42.101.1.16 (portStatusOperEdgePort) 1.3.6.1.2.1.17.2.19.1.3 (dot1dStpPortOperEdgePort)
oper_p2p_port	The operational point-to-point status of the LAN segment attached to this port. It indicates whether a port is considered to have a point-to-point connection. **Values** true, false **OID** 1.3.6.1.4.1.3181.10.6.2.42.101.1.17 (portStatusOperP2pPort) 1.3.6.1.2.1.17.2.19.1.5 (dot1dStpPortOperPointToPoint)
role	Assigned port role **Values** *UNKNOWN* Unknown *ROOT* Root bridge *DESIGNATED* Designated bridge *ALTERNATE* Alternate bridge *BACKUP* Backup bridge *MASTER* Master bridge *DISABLED* Disabled **OID** 1.3.6.1.4.1.3181.10.6.2.42.101.1.18 (portStatusRole)

©2026 MICROSENS GmbH & Co. KG - Hamm/Germany - www.microsens.com

inconsistent_bridge	A value of true indicates that the port is inconsistent due to Bridge assurance. **Values** true, false **OID** 1.3.6.1.4.1.3181.10.6.2.42.101.1.19 (portStatusInconsistentBridge)

Group	**bridge_status**
Path	Protocol.STP.bridge_status
Description	This status table collects all bridge related status fields.
stp_protocol	STP protocol specification = 3 for 802.1D. **Value** Number in range 0-255 **OID** 1.3.6.1.4.1.3181.10.6.2.42.100.1.2 (bridgeStatusStpProtocol) 1.3.6.1.2.1.17.2.1 (dot1dStpProtocolSpecification)
hello_time	The amount of time between the transmission of Configuration bridge PDUs by this node on any port when it is the root of the spanning tree, or trying to become so, in seconds. This is the actual value that this bridge is currently using. **Value** Number in range 0-65535 **OID** 1.3.6.1.4.1.3181.10.6.2.42.100.1.3 (bridgeStatusHelloTime) 1.3.6.1.2.1.17.2.9 (dot1dStpHelloTime)
max_age	The maximum age of Spanning Tree Protocol information learned from the network on any port before it is discarded, in seconds. This is the actual value that this bridge is currently using. **Value** Number in range 0-65535 **OID** 1.3.6.1.4.1.3181.10.6.2.42.100.1.4 (bridgeStatusMaxAge) 1.3.6.1.2.1.17.2.8 (dot1dStpMaxAge)
hold_time	This time value determines the interval length during which no more than two Configuration bridge PDUs shall be transmitted by this node, in seconds. **Value** Number in range 0-65535 **OID** 1.3.6.1.4.1.3181.10.6.2.42.100.1.5 (bridgeStatusHoldTime) 1.3.6.1.2.1.17.2.10 (dot1dStpHoldTime)

©2026 MICROSENS GmbH & Co. KG - Hamm/Germany - www.microsens.com

forward_delay	This time controls how fast a port changes its spanning state when moving towards the Forwarding state. The value determines how long the port stays in each of the Listening and Learning states, which precede the Forwarding state. **Value** Number in range 0-65535 **OID** 1.3.6.1.4.1.3181.10.6.2.42.100.1.6 (bridgeStatusForwardDelay) 1.3.6.1.2.1.17.2.11 (dot1dStpForwardDelay)
root_port	The port number of the port that offers the lowest cost path from this bridge to the root bridge. **Value** PORT0-255 **OID** 1.3.6.1.4.1.3181.10.6.2.42.100.1.7 (bridgeStatusRootPort) 1.3.6.1.2.1.17.2.7 (dot1dStpRootPort)
root_cost	The cost of the path to the root as seen from this bridge. **Value** Number in range 0-0xFFFFFFFF **OID** 1.3.6.1.4.1.3181.10.6.2.42.100.1.8 (bridgeStatusRootCost) 1.3.6.1.2.1.17.2.6 (dot1dStpRootCost)
topology_changes	The total number of topology changes detected by this bridge since the management entity was last reset or initialized. **Value** Number in range 0-65535 **OID** 1.3.6.1.4.1.3181.10.6.2.42.100.1.9 (bridgeStatusTopologyChanges) 1.3.6.1.2.1.17.2.4 (dot1dStpTopChanges)
last_topology_change	The time in seconds when the last time a topology change was detected. **Value** PERIOD0-0xFFFFFFFF **OID** 1.3.6.1.4.1.3181.10.6.2.42.100.1.10 (bridgeStatusLastTopologyChange) 1.3.6.1.2.1.17.2.3 (dot1dStpTimeSinceTopologyChange)
mstp_region_name	This the region name actually used. **Value** String, max. 32 characters. **OID** 1.3.6.1.4.1.3181.10.6.2.42.100.1.11 (bridgeStatusMstpRegionName)
msti_revision_level	This the revision level actually used. **Value** Number in range 0-65535 **OID** 1.3.6.1.4.1.3181.10.6.2.42.100.1.12 (bridgeStatusMstiRevisionLevel)

©2026 MICROSENS GmbH & Co. KG - Hamm/Germany - www.microsens.com

cist_internal_root_path_cost		
	Value	Number in range 0-0xFFFFFFFF
	OID	1.3.6.1.4.1.3181.10.6.2.42.100.1.13 (bridgeStatusCistInternalRootPathCost)
cist_regional_root_id	The Bridge Identifier of the current CIST Regional Root	
	Value	String, max. 32 characters.
	OID	1.3.6.1.4.1.3181.10.6.2.42.100.1.14 (bridgeStatusCistRegionalRootId)
cist_regional_root_priority	The Bridge priority of the current CIST Regional Root	
	Value	Number in range 0-0xFFFFFFFF
	OID	1.3.6.1.4.1.3181.10.6.2.42.100.1.15 (bridgeStatusCistRegionalRootPriority)
cist_regional_root_mac	The Bridge MAC of the current CIST Regional Root	
	Format	MAC Address *hh-hh-hh-hh-hh-hh* (*hh* = hexadecimal number between 00 to ff)
	OID	1.3.6.1.4.1.3181.10.6.2.42.100.1.16 (bridgeStatusCistRegionalRootMac)
max_hops		
	Value	Number in range 0-65535
	OID	1.3.6.1.4.1.3181.10.6.2.42.100.1.17 (bridgeStatusMaxHops)
mstp_stp_aging_time	Aging time of the bridge	
	Value	Number in range 0-0xFFFFFFFF
	OID	1.3.6.1.4.1.3181.10.6.2.42.100.1.18 (bridgeStatusMstpStpAgingTime)

©2026 MICROSENS GmbH & Co. KG - Hamm/Germany - www.microsens.com

30 Port-based Access Control

30.1 Key Features

IEEE 802.1X Authentication

Multiple users can be authenticated using central RADIUS server based on username/password or certificate.

By using RADIUS a network wide authentication database can be used. This eliminates the need to configure each unit separately.

IEEE 802.1X Supplicant

(Not available with hardware 1.5 / Only available on ports [2/*] with hardware 1.6)
An IEEE 802.1X Supplicant can authenticate the device at the port access controlled uplink port. Username/password and certificate based methods are supported (EAP-MD5, PEAP).

The switch can perform authentication on behalf of the attached device. Useful for devices that do not support authentication themselves.

RADIUS MAC Authentication

Multiple users can be authenticated using central RADIUS server based on their MAC addresses.

By using RADIUS a network wide authentication database can be used. This eliminates the need to configure each unit separately.

MAC locking

Multiple users can be authenticated based on their MAC addresses. Unlimited MAC addresses can be configured manually or automatically. Possibility to mix and match vendor MACs and specific MACs

This permits MAC based authentication in the absence of a centralized RADIUS setup. Strict manual security.

MAC learning

Up to 9 MAC addresses may be learned per port. Learned addresses are stored in the configuration. MAC learning can be preset prior to roll out. Simply the first n devices connected are automatically learned.

MAC learning simplifies initial configuration by eliminating the need to know the MAC addresses.

Limited number of MACs

A port may be limited to accept only a configurable number of MACs on a given port (1 - 255). Additional MACs are blocked in the hardware layer.

This is an effective method to protect against Denial-of-Service attacks caused by MAC storms.

Limited number of MACs per VLAN

A port may be limited to accept only a configurable number of MACs on a given port (1 - 255) and VLAN..

This is an effective method to protect against Denial-of-Service attacks caused by MAC storms.

©2026 MICROSENS GmbH & Co. KG - Hamm/Germany - www.microsens.com

Learned MAC time out

Time out of learned MACs to allow another computer to connect in MAC locking environment.

Permits reuse of purposefully limited MACs on a given port.

Dynamic VLAN

RADIUS server can provide user specific VLAN ID using tunnel-attribute in accept message. Port VLAN is dynamically set accordingly. Unauthorized users may be placed in an unauthorized VLAN ('guest VLAN') or blocked completely. VLAN 4096 can be specified to indicate port default VLAN.

Allowed Outgoing Port (Port based VLANs)

This feature is used to limit the outgoing traffic for each port to certain destination ports. This feature is also known as port based VLAN.

Can for example be used to isolate user ports when switch is used as Internat access gateway.

IP Address Logging

The IP address of the connected user is detected via ARP snooping. User IP address information can be logged locally and using RADIUS accounting function.

Useful when switch is used in public internet provider situation where user information must be logged for legal reasons.

Wake-on-Lan support

A solution to send out Wake-on-LAN packets on a PACC blocked port. This feature is also called Unidirectional Controlled Port or Admin Controlled Directions in the IEEE 802.1X-2004 specification.

This feature is used to permit the use of Wake-On-Lan in combination with 802.1X authentication

Network Edge Authentication

The network edge authentication mode is used to authenticate a "supplicant switch" connected to a downlink port of the switch. After successful authentication the port should be open for any traffic from the downstream switch. Similar to Cisco NEAT feature.

This feature authenticates an authentication switch placed outside a wiring closet with an authentication switch placed in the wiring closet

Authentication Fail Retry Timer

When authentication has failed, the authentication is restarted after the defined time in seconds.

This is useful for unattended devices using MAC authentication or when access rights are centrally changed on the RADIUS server and the end unit cannot be reauthenticated manually.

Change of Authorization

The feature CoA permits un-authorization followed by a re-authentication of a running session initiated from an Authentication Server via RADIUS protocol.

This is useful for informing the Authenticator of a change in the authentication state on the server.

©2026 MICROSENS GmbH & Co. KG - Hamm/Germany - www.microsens.com

30.2 Functional Description

30.2.1 Introduction

With the growing number of LANs available for public access (Hotels, Hospitals, Universities, Conference Rooms, etc.), the physical control of access to restricted LANs is no more practical. Furthermore, even without a successful server login, already the access to the network can become a security threat (Denial of Service attacks, spoofing etc.). To address these security issues, the IEEE defined a standard to secure network ports already at the port level, thus preventing unauthorized access directly at the edge. MICROSENS Micro Switches are designed to support different methods of port based access control, including IEEE Std. 802.1X.

IEEE 802.1X Authentication

A user (Supplicant) requests network access via the switch it is connected to (Authenticator) by presenting his credentials (username/password or certificate) to a RADIUS server (Authentication Server). When successfully verified by the RADIUS server, the switch port is opened, otherwise the network access remains blocked or limited.

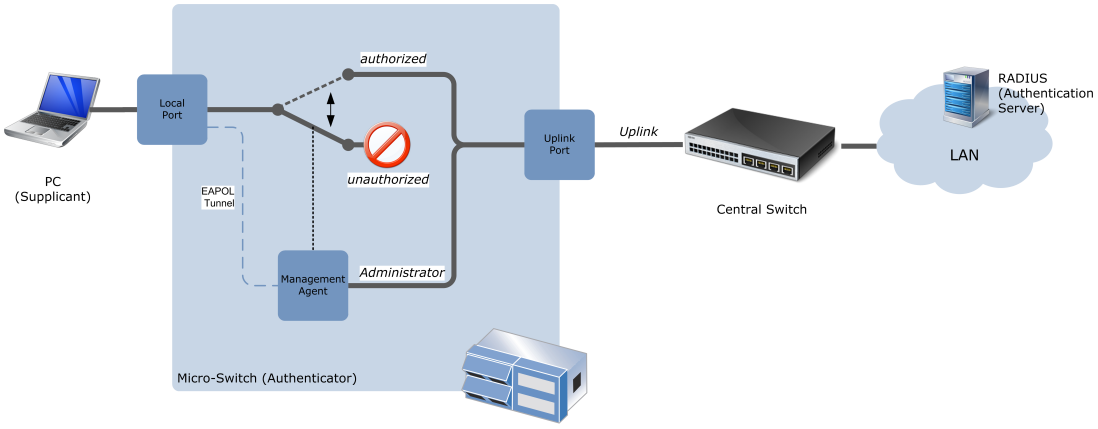

If the supplicant does not support IEEE 802.1X authentication, an automatic fallback to authentication via user MAC address only is possible (configuration option).

RADIUS MAC Authentication

A user is identified by his MAC address only. This MAC address is checked by a RADIUS server. When successfully verified by the RADIUS server, the switch port the user is connected to is opened, otherwise the network access remains blocked or limited.

MAC Locking

If there is no central authentication server in the network, the network access can be locally restricted to a maximum of four MAC addresses per port. These MAC addresses can either be configured statically or the first MAC addresses learned on the port can be used. These authorized MAC addresses are then stored permanently in the switch.

Force-authorized

In this mode, the port is always forwarding all traffic. If VLAN filtering is enabled, the static VLAN configuration is valid. VLAN dependent settings for RADIUS based authentication modes are ignored.

©2026 MICROSENS GmbH & Co. KG - Hamm/Germany - www.microsens.com

Force-unauthorized

In this mode, the port is permanently blocking all traffic. All other authentication mode settings are ignored.

30.2.2 IEEE 802.1X Authentication

System setup

An IEEE 802.1X compliant Port Based Network Access Control system consists of three components:

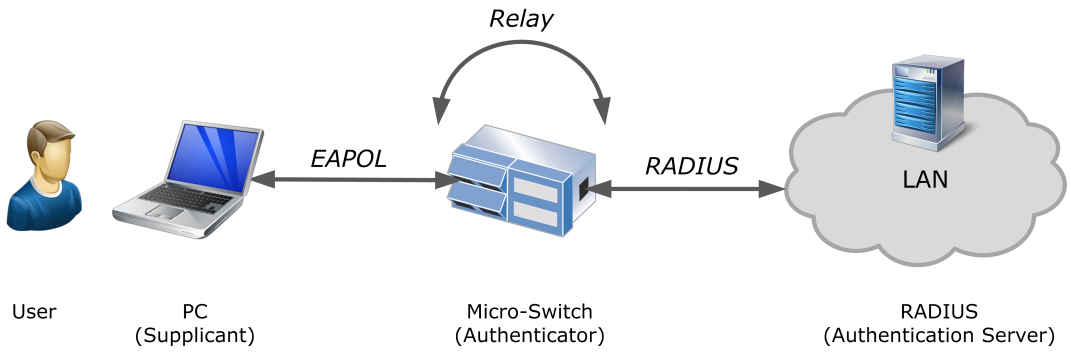

Supplicant

The supplicant is the device requesting access to the network. This is typically a PC, Printer, VoIP phone etc. The supplicant must implement an IEEE 802.1X compliant client which handles the communication during the authentication process.

Authenticator

The authenticator is the switch by which the supplicant is connected to the network. The authenticator controls the network access of the supplicant and acts as a transfer agent between the supplicant and the authentication server during the authentication process. It forwards EAPOL packets encapsulated in RADIUS protocol to the authentication server.

Authentication Server

The authentication server is a RADIUS (Remote Authentication Dial In User Service) server hosting the user database. It validates the supplicant's access request. Depending on the result of the user validation, the server sends an 'Accept' or 'Reject' message to the authenticator to adjust the supplicant's network access accordingly.

IEEE 802.1X Communication flow

During the authentication process, supplicant and authentication server are communicating indirectly by the authenticator. The supplicant communicates with the authenticator using the EAPOL protocol, whereas the authenticator communicates with the authentication server using the RADIUS protocol. The authenticator acts as a transfer agent between the two protocols during the authentication process.

©2026 MICROSENS GmbH & Co. KG - Hamm/Germany - www.microsens.com

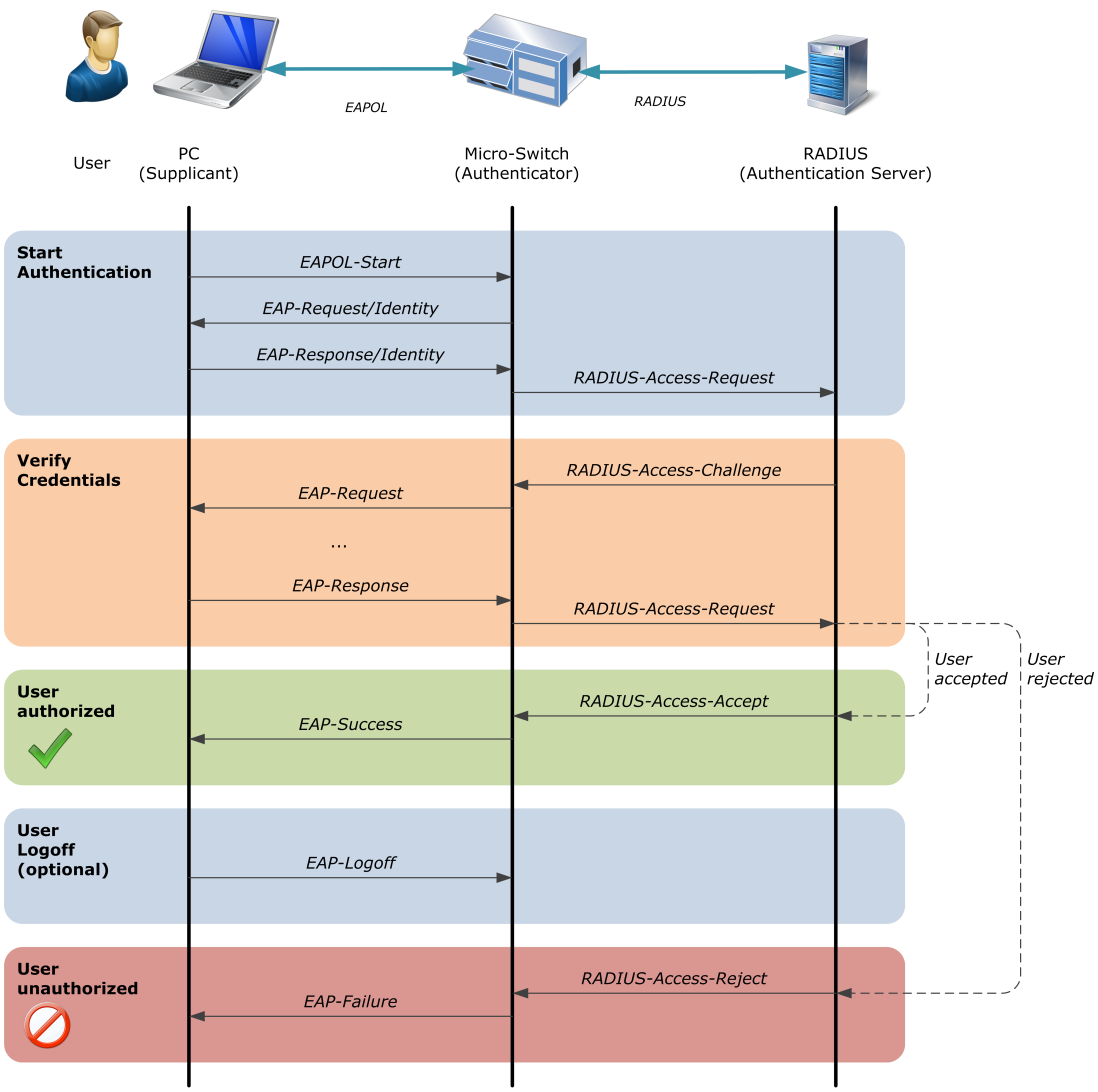

Upon link up, the authentication process can either be initiated by the supplicant sending a 'EAPOL_Start' message or by the authenticator sending a 'Request_Identity' message. The supplicant reacts with a 'Response_Identity' message. This message is encapsulated by the authenticator and sent to the RADIUS server (authentication server).

The RADIUS server verifies the supplicant's identity. If the identity is known, the RADIUS initiates the authentication challenge process. Different protocols can be used, depending on the RADIUS configuration:

- **EAP-MD5:** RADIUS server optains user password via MD5 challenge method
- **EAP-PEAP:** Protected EAP
- **PEAP:** is a joint proposal by Cisco Systems, Microsoft and RSA Security as an open standard. Protocols supported: PEAP/EAP-MSCHAPv2
- **EAP-TTLS:** Tunnelled TLS with standard inner authentication protocols: EAP-MD5, EAP-TLS, PAP, MSCHAPv2
- **EAP-TLS:** Transport Layer Security

©2026 MICROSENS GmbH & Co. KG - Hamm/Germany - www.microsens.com

When the user is authenticated successfully, the RADIUS server finally sends an 'RADIUS-Access-Accept' message to the authenticator. This causes the authenticator to grant the supplicant access to the network. The authenticator confirms the authorization to the supplicant by sending a 'EAP-Success' message. The authentication process terminates.

30.2.3 RADIUS MAC Authentication

In this mode, the user is authorized based on its MAC address. This is very useful to connect non-IEEE Std. 802.1X devices like VoIP-phones, printers or Wi-Fi access points to the network without generating a security leak.

> ***ATTENTION:*** ***Authenticating a supplicant based on its MAC address only is not as strong as the use of IEEE 802.1X authentication protocols. MAC addresses can be copied easily, so an intruder can get network access if he is able to clone an authorized MAC address.***

The MAC address must be registered as a valid user in the RADIUS user database. To authenticate a MAC address on a RADIUS server, the MAC address is treated as username by the RADIUS. The format of the MAC address field and the value used for the password can be configured.

A maximum of 4 MAC addresses are permitted on a port. If the maximum number of permitted users is exceeded, the whole port becomes unauthorized for all users.

As long as the MAC discovery phase is not finalized, the network port is blocked to prevent any network interference.

©2026 MICROSENS GmbH & Co. KG - Hamm/Germany - www.microsens.com

30.3 PACC CLI Command Reference

The following table lists all CLI commands applicable for this feature section. For each parameter, the access mode is given:

R = Read Only, R/W = Read/Write, X = Executable Action.

Please note that the effective access rights are dependent on the login level of the user.

Category	Group	Table	Parameter	Options	Access	Description
Protocol.						
	pacc.					Port Access Control according to 802.1X, MAC locking and other mechanisms.
			enable_port_access_control		R/W	Generally enables the port access control function.
			reauthentication_period		R/W	EAP reauthentication period in seconds. To disable reauthentication set value to 0.
			nas_identifier		R/W	Optional NAS-Identifier string for RADIUS messages.
			mac_separator_char		R/W	Defines the character which separates the bytes of a MAC address.
			mac_spelling		R/W	Defines in which case the MAC is defined.
			mac_password_source		R/W	Defines if MAC or Password is used for authentication.
			mac_password_string		R/W	User defined password string.
			primary_auth_server_name		R/W	Symbolic name of the RADIUS server used for authentication.
			primary_acct_server_name		R/W	Symbolic name of the RADIUS server used for accounting.
			fallback_auth_server_name		R/W	Symbolic name of the RADIUS server used for authentication if the primary server is down. Leave empty when no fallback is required.
			fallback_acct_server_name		R/W	Symbolic name of the RADIUS server used for accounting if the primary server is down. Leave empty when no fallback is required.
			server_down_timeout		R/W	Retry interval in seconds for trying to return to the primary RADIUS server.
			filter_authorized_mac		X	Filter user_status table to show only entries for specified MAC. Supply MAC address as parameter. Enter only the first 3 value pairs of the MAC to search for vendor MACs. Syntax example: mac.filter_mac = 01:22:3A.
			filter_authorized_port		X	Filter user_status table to show only entries associated with a given port range. The shorthand port format like 1 for 1/1 may be used. Syntax examples: mac.filter_port = 1/1,2/5 or mac.filter_port = 1-3,5.
			filter_authorized_user		X	Filter user_status table to show only entries for the given user name. Wildcards *name* automatically apply so that only a part of the expected name needs to be supplied.
		port_config[PORT].				
			authorize_mode		R/W	Defines method for authorization of user on port.
			authorize_priority		R/W	When two methods provide positive authorization, then this parameter decides which method is used.

©2026 MICROSENS GmbH & Co. KG - Hamm/Germany - www.microsens.com

unauthorized_mode	R/W	Defines how unauthorized ports are treated.
auth_fail_retry_time	R/W	When authentication has failed, the authentication is restarted after the defined time in seconds. This is useful for unattended devices using MAC authentication or when access rights are centrally changed on the RADIUS server and the end unit cannot be reauthenticated manually. The default value of 0 disables the automatic retry.
mac_timeout	R/W	Defines how long authorized MACs remain authorized after inactivity of the MAC.
limited_number_of_macs	R/W	The effect of this parameter depends on other settings: if PACC is disabled or PACC is enabled and authorize_mode = ALWAYS_AUTHORIZED is used, then the parameter limits the total number of permitted MACs on the port. If PACC is enabled and an authorize mode via RADIUS is selected, the parameter sets the total number of permitted MACs per VLAN for this port. Set to 0 for normal unlimited operation.
drop_unknown_unicasts	R/W	When set only unicast frames with learned or known MAC address will be send out of this port.
drop_egress_broadcasts	R/W	When set no broadcast frames with egress this port.
edge_mode	R/W	Multi-Host-Single-Authentication (MHSA). Works like EDGE_802.1X_VIA_RADIUS regardless of the authentication mode. Once authenticated the port is open for any traffic from that port.
learn_mac_now	X	Learn the next incoming MAC(s) of this port and enter them into the mac_table. Syntax: learn_mac_now = 3 will learn the next 3 MAC addresses. Use pacc.port_status.number_of_learned_macs to verify progress. Type learn_mac_now = 0 to cancel further learning.
reauthenticate	X	This action forces re-authentication of the port using the configured method. No parameter required.
unauthorize_mac	X	This action will unauthorize a specific MAC. When no MAC is specified, the entire port is unauthorized.
authorized_macs[DYNAMIC].		This table defines statically permitted MACs that do not require the device to perform any further authorization process.
name	R/W	Unique name to reference this entry and to remember whose MAC address is entered.
mac_address	R/W	MAC address of authorized user for port.
permitted_ports	R/W	Mask which defines at which port(s) this MAC is permitted. A value of 0 disables this entry. Syntax: slot/port, slot/port or use hex value for quick setup. Example: = 0xf (ports 1-4)
treat_as_vendor_mac	R/W	When set, the MAC is treated as vendor MAC. All MACs from this vendor are permitted then.
supplicant.		The 802.1x supplicant permits automatic login when a port is activated.
enable_supplicant	R/W	Generally enables the 802.1x supplicant function.
port	R/W	Port through which the authorizing authority is reached. Usually this is the link port.
action_on_link_down	R/W	When the supplicant link goes down, the local authenticated user ports can be deauthenticated as well.

©2026 MICROSENS GmbH & Co. KG - Hamm/Germany - www.microsens.com

identity	R/W	Inner identity for tunneled EAP methods (e.g. EAP-TTLS)
anonymous_identity	R/W	Identity string for EAP-MD5. Also used as the unencrypted anonymous outer identity with EAP types that support different tunneled identity, e.g. EAP-TTLS.
authentication_protocol	R/W	Space-separated list of accepted EAP methods. If not set, all listed methods are allowed. MD5 = insecure and does not generate keying material to be used as a Phase 2 method with PEAP or TTLS. PEAP = with tunneled EAP authentication. TTLS = with tunneled EAP or PAP/CHAP/MSCHAP/ MSCHAPV2 authentication. TLS = client and server certificate.
enter_password	X	Set a new authentication password which replaces the previous one. Note: trailing spaces or multiple spaces in the password are automatically removed.
encrypted_auth_password	R/W	The encrypted EAP password. Can be set with enter_password action.
enter_private_key_password	X	Set a new private key password which replaces the previous one. Note: trailing spaces or multiple spaces in the password are automatically removed.
encrypted_key_password	R/W	The encrypted private key password. Can be set with enter_private_key_password action.
reauthenticate	X	Restarts the authentication process for testing and display the results.
change_of_authorization.		This table configures optional support for coa feature. Coa permits central management of running sessions.
primary_dac_server_name	R/W	Symbolic name of a RADIUS server whose address is accepted as source for COA requests.
fallback_dac_server_name	R/W	Symbolic name of a RADIUS server whose address is accepted as source for COA requests. Leave empty when no fallback is required. Both primary and fallback servers are accepted in parallel.
udp_port	R/W	UDP port used for receiving COA packets. Default: 3799
require_authenticator	R/W	Verify the message authenticator with the shared secret stored in the corresponding radius server configuration.
require_event_timestamp	R/W	Require the event-timestamp radius attribute to be present in the request packet. This safeguards against replay attacks.
event_timestamp_window	R/W	Maximum time difference accepted between current device time and event-timestamp in the request. Use of NTP time synchronization is recommended.
port_status[PORT].		This table indicates the current port authentication state and contains the data for the last user or MAC that tried to authorize on a given port. To see all users in a multiuser environment refer to user_status table.
authorization_state	R	Indicates the port access control state.
authorization_mode	R	Last authorization method applied on this port.
edge_mode	R	Port is in edgemode by configuration or though dynamic assignment method.
last_state_change	R	Indicates the last time the authorization state of this port was modified.

©2026 MICROSENS GmbH & Co. KG - Hamm/Germany - www.microsens.com

	number_of_macs_to_learn	R	Indicates how many MAC addresses will be learned. This is a result of the learn_macs_now action command.
	number_of_learned_macs	R	This value indicates how many MAC addresses have actually been learned since the learn_macs_now command had been issued.
port_mac_status[PORT].			This table indicates the current port authentication state and contains the data for the last user or MAC that tried to authorize on a given port. To see all users in a multiuser environment refer to user_status table.
	authorization_state	R	Indicates the port access control state.
	user_mac	R	Last MAC that attempted authorization.
	user_name	R	Last user that attempted authorization unless MAC authentication was used in which case this field is blank.
	vlan_alias	R	Last dynamically through radius assigned VLAN alias.
	vlan_id	R	Last dynamically through radius assigned VLAN.
	idle_timeout	R	This value reflects the idle timeout setting as received via RADIUS. It sets the maximum number of seconds before an idle session is terminated.
	session_timeout	R	This value reflects the session timeout setting as received via RADIUS. It sets the maximum number of seconds of service to be provided to the user before the session is terminated.
	filter_id	R	If the RADIUS attribute filter-id is used its value is reflected here.
	last_state_change	R	Indicates the last time the authorization state of this port was modified.
port_802_1x_status[PORT].			This table indicates the current port authentication state and contains the data for the last user or MAC that tried to authorize on a given port. To see all users in a multiuser environment refer to user_status table.
	authorization_state	R	Indicates the port access control state.
	user_mac	R	Last MAC that attempted authorization.
	user_name	R	Last user that attempted authorization unless MAC authentication was used in which case this field is blank.
	vlan_alias	R	Last dynamically through radius assigned VLAN alias.
	vlan_id	R	Last dynamically through radius assigned VLAN.
	idle_timeout	R	This value reflects the idle timeout setting as received via RADIUS. It sets the maximum number of seconds before an idle session is terminated.
	session_timeout	R	This value reflects the session timeout setting as received via RADIUS. It sets the maximum number of seconds of service to be provided to the user before the session is terminated.
	filter_id	R	If the RADIUS attribute filter-id is used its value is reflected here.
	last_state_change	R	Indicates the last time the authorization state of this port was modified.
user_status[250].			This table lists all users authorized or rejected via some form of port access control. Use filter actions for easier viewing.

©2026 MICROSENS GmbH & Co. KG - Hamm/Germany - www.microsens.com

entry_state	R	Indicates if this record displays a currently active login or a history entry of a previous authentication which is invalidated by now.
authorization_state	R	Indicates the port access control state resulting from this authorization attempt .
authorization_mode	R	Authorization method used for this authorization attempt.
port	R	Indicates the port at which this MAC is connected.
user_mac	R	MAC used for this authorization attempt.
user_name	R	User that attempted authorization unless MAC authentication was used in which case this field is blank.
vlan_alias	R	Dynamically through radius assigned VLAN alias.
vlan_id	R	Dynamically through radius assigned VLAN.
idle_timeout	R	This value reflects the idle timeout setting as received via RADIUS. It sets the maximum number of seconds before an idle session is terminated.
session_timeout	R	This value reflects the session timeout setting as received via RADIUS. It sets the maximum number of seconds of service to be provided to the user before the session is terminated.
filter_id	R	If the RADIUS attribute filter-id is used its value is reflected here.
login_time_stamp	R	Indicates the time when this record was created.
login_epoch	R	Indicates the time when this record was created. in Linux time since the epoch format.

©2026 MICROSENS GmbH & Co. KG - Hamm/Germany - www.microsens.com

30.4 PACC Configuration Parameters

Group **Path**	**General Parameters** Protocol.PACC
enable_port_access_control	Generally enables the port access control function. **Values** enabled, disabled **OID** 1.3.6.1.4.1.3181.10.6.2.46.1 (paccEnablePortAccessControl) 1.0.8802.1.1.1.1.1.1 (dot1xPaeSystemAuthControl)
reauthentication_period	EAP reauthentication period in seconds. To disable reauthentication set value to 0. **Value** Number in range 0-0xFFFFFFFF **OID** 1.3.6.1.4.1.3181.10.6.2.46.2 (paccReauthenticationPeriod) 1.0.8802.1.1.1.1.2.1.1.12 (dot1xAuthReAuthPeriod)
nas_identifier	Optional NAS-Identifier string for RADIUS messages. **Value** String, max. 256 characters. **OID** 1.3.6.1.4.1.3181.10.6.2.46.3 (paccNasIdentifier)
mac_separator_char	Defines the character which separates the bytes of a MAC address. **Value** String, max. 2 characters. **OID** 1.3.6.1.4.1.3181.10.6.2.46.4 (paccMacSeparatorChar)
mac_spelling	Defines in which case the MAC is defined. **Values** *LOWER_CASE* MAC address written in lower case *UPPER_CASE* MAC address written in upper case **OID** 1.3.6.1.4.1.3181.10.6.2.46.5 (paccMacSpelling)
mac_password_source	Defines if MAC or Password is used for authentication. **Values** *USE_MAC* Use MAC *USE_PASSWORD* Use password **OID** 1.3.6.1.4.1.3181.10.6.2.46.6 (paccMacPasswordSource)

©2026 MICROSENS GmbH & Co. KG - Hamm/Germany - www.microsens.com

mac_password_string	User defined password string. **Value** String, max. 32 characters. **OID** 1.3.6.1.4.1.3181.10.6.2.46.7 (paccMacPasswordString)
primary_auth_server_name	Symbolic name of the RADIUS server used for authentication. **Value** String, max. 32 characters. **OID** 1.3.6.1.4.1.3181.10.6.2.46.8 (paccPrimaryAuthServerName)
primary_acct_server_name	Symbolic name of the RADIUS server used for accounting. **Value** String, max. 32 characters. **OID** 1.3.6.1.4.1.3181.10.6.2.46.9 (paccPrimaryAcctServerName)
fallback_auth_server_name	Symbolic name of the RADIUS server used for authentication if the primary server is down. Leave empty when no fallback is required. **Value** String, max. 32 characters. **OID** 1.3.6.1.4.1.3181.10.6.2.46.10 (paccFallbackAuthServerName)
fallback_acct_server_name	Symbolic name of the RADIUS server used for accounting if the primary server is down. Leave empty when no fallback is required. **Value** String, max. 32 characters. **OID** 1.3.6.1.4.1.3181.10.6.2.46.11 (paccFallbackAcctServerName)
server_down_timeout	Retry interval in seconds for trying to return to the primary RADIUS server. **Value** Number in range 0-65535 **OID** 1.3.6.1.4.1.3181.10.6.2.46.12 (paccServerDownTimeout)
filter_authorized_mac	Filter user_status table to show only entries for specified MAC. Supply MAC address as parameter. Enter only the first 3 value pairs of the MAC to search for vendor MACs. Syntax example: mac.filter_mac = 01:22:3A. **Action** Excecute command with parameter string max. 32 characters. **OID** 1.3.6.1.4.1.3181.10.6.2.46.13 (paccFilterAuthorizedMac)
filter_authorized_port	Filter user_status table to show only entries associated with a given port range. The shorthand port format like 1 for 1/1 may be used. Syntax examples: mac.filter_port = 1/1,2/5 or mac.filter_port = 1-3,5. **Action** Excecute command with parameter string max. 32 characters. **OID** 1.3.6.1.4.1.3181.10.6.2.46.14 (paccFilterAuthorizedPort)

©2026 MICROSENS GmbH & Co. KG - Hamm/Germany - www.microsens.com

filter_authorized_user	Filter user_status table to show only entries for the given user name. Wildcards *name* automatically apply so that only a part of the expected name needs to be supplied. **Action** Excecute command with parameter string max. 128 characters. **OID** 1.3.6.1.4.1.3181.10.6.2.46.15 (paccFilterAuthorizedUser)

Group	**port_config**, for each port[0..24]
Path	Protocol.PACC.port_config[port]
Description	

authorize_mode	Defines method for authorization of user on port.		
	Values	*ALWAYS_AUTHORIZED*	Port access control is not used for this port. The port is always in forwarding state.
		VIA_MAC_TABLE	Received MAC address is locally checked against mac_table. If matched, the port is set to forwarding state.
		MAC_VIA_RADIUS	Received MAC address is authenticated by a RADIUS server.
		802_1X_VIA_RADIUS	802.1X protocol is used (login on the Ethernet port). The login is authenticated by a RADIUS server.
		MAC_OR_802_1X_VIA_RADIUS	Both RADIUS based mechanisms are used. When at least one method matches, the port is set to forwarding state.
		FORCE_UNAUTHORIZED	Port is set port to the unauthorized state and unautorized_mode setting applies
		MAC_EVENT_ONLY	Port is always authorized plus for each new MAC a MAC_ACCEPTED event is generated.
		EDGE_802_1X_VIA_RADIUS	802.1X protocol is used to authenticate a downstream authentication switch. Once authenticated the port is open for any traffic from that port.
	OID	1.3.6.1.4.1.3181.10.6.2.46.16.1.2 (portConfigAuthorizeMode) 1.0.8802.1.1.1.1.2.1.1.6 (dot1xAuthAuthControlledPortControl)	

©2026 MICROSENS GmbH & Co. KG - Hamm/Germany - www.microsens.com

authorize_priority	When two methods provide positive authorization, then this parameter decides which method is used. **Values** *PREFER_802_1X* Use 802.X credentials if possible *PREFER_MAC* Use MAC related credentials if possible **OID** 1.3.6.1.4.1.3181.10.6.2.46.16.1.3 (portConfigAuthorizePriority)
unauthorized_mode	Defines how unauthorized ports are treated. **Values** *BLOCKED* Port is blocked completely for incoming and outgoing traffic when unauthorized *USE_UNAUTHORIZED_VLAN* Port is attached to unauthorized VLAN when unauthorized *INCOMING_BLOCKED* Port is blocked for incoming traffic but outgoing packets like a wake-on-lan packet can still be send out. **OID** 1.3.6.1.4.1.3181.10.6.2.46.16.1.4 (portConfigUnauthorizedMode)
auth_fail_retry_timer	When authentication has failed, the authentication is restarted after the defined time in seconds. This is useful for unattended devices using MAC authentication or when access rights are centrally changed on the RADIUS server and the end unit cannot be reauthenticated manually. The default value of 0 disables the automatic retry. **Value** Number in range 0-86400 **OID** 1.3.6.1.4.1.3181.10.6.2.46.16.1.5 (portConfigAuthFailRetryTimer)
mac_timeout	Defines how long authorized MACs remain authorized after inactivity of the MAC. **Values** *NONE* MAC on this port remain authorized until a link change occurs *SLOW* MAC on this port remain authorized for the full duration of mac.global_aging_time when inactive *FAST* MAC on this port remain authorized for the half duration of mac.global_aging_time when inactive **OID** 1.3.6.1.4.1.3181.10.6.2.46.16.1.6 (portConfigMacTimeout)
limited_number_of_macs	The effect of this parameter depends on other settings: if PACC is disabled or PACC is enabled and authorize_mode = ALWAYS_AUTHORIZED is used, then the parameter limits the total number of permitted MACs on the port. If PACC is enabled and an authorize mode via RADIUS is selected, the parameter sets the total number of permitted MACs per VLAN for this port. Set to 0 for normal unlimited operation. **Value** Number in range 0-255 **OID** 1.3.6.1.4.1.3181.10.6.2.46.16.1.7 (portConfigLimitedNumberOfMacs)

©2026 MICROSENS GmbH & Co. KG - Hamm/Germany - www.microsens.com

drop_unknown_unicasts	When set only unicast frames with learned or known MAC address will be send out of this port. ATTENTION: Not implemented. **Values** enabled, disabled **OID** 1.3.6.1.4.1.3181.10.6.2.46.16.1.8 (portConfigDropUnknownUnicasts)
drop_egress_broadcasts	When set no broadcast frames with egress this port. ATTENTION: Not implemented. **Values** enabled, disabled **OID** 1.3.6.1.4.1.3181.10.6.2.46.16.1.9 (portConfigDropEgressBroadcasts)
edge_mode	Multi-Host-Single-Authentication (MHSA). Works like EDGE_802.1X_VIA_RADIUS regardless of the authentication mode. Once authenticated the port is open for any traffic from that port. **Values** enabled, disabled **OID** 1.3.6.1.4.1.3181.10.6.2.46.16.1.10 (portConfigEdgeMode)
learn_mac_now	Learn the next incoming MAC(s) of this port and enter them into the mac_table. Syntax: learn_mac_now = 3 will learn the next 3 MAC addresses. Use pacc.port_status.number_of_learned_macs to verify progress. Type learn_mac_now = 0 to cancel further learning. **Action** Excecute command with parameter string max. 20 characters. **OID** 1.3.6.1.4.1.3181.10.6.2.46.16.1.11 (portConfigLearnMacNow)
reauthenticate	This action forces re-authentication of the port using the configured method. No parameter required. **Action** Excecute command. **OID** 1.3.6.1.4.1.3181.10.6.2.46.16.1.12 (portConfigReauthenticate)
unauthorize_mac	This action will unauthorize a specific MAC. When no MAC is specified, the entire port is unauthorized. **Action** Excecute command with parameter string max. 20 characters. **OID** 1.3.6.1.4.1.3181.10.6.2.46.16.1.13 (portConfigUnauthorizeMac)

Group	**authorized_macs**, dynamical size
Path	Protocol.PACC.authorized_macs
Description	This table defines statically permitted MACs that do not require the device to perform any further authorization process.

©2026 MICROSENS GmbH & Co. KG - Hamm/Germany - www.microsens.com

name	Unique name to reference this entry and to remember whose MAC address is entered. **Value** String, max. 32 characters. **OID** 1.3.6.1.4.1.3181.10.6.2.46.17.1.2 (authorizedMacsName)
mac_address	MAC address of authorized user for port. **Format** MAC Address *hh-hh-hh-hh-hh-hh* (*hh* = hexadecimal number between 00 to ff) **OID** 1.3.6.1.4.1.3181.10.6.2.46.17.1.3 (authorizedMacsMacAddress)
permitted_ports	Mask which defines at which port(s) this MAC is permitted. A value of 0 disables this entry. Syntax: slot/port, slot/port or use hex value for quick setup. Example: = 0xf (ports 1-4) **Value** PORTMASK0-0xFFFFFFFF **OID** 1.3.6.1.4.1.3181.10.6.2.46.17.1.4 (authorizedMacsPermittedPorts)
treat_as_vendor_mac	When set, the MAC is treated as vendor MAC. All MACs from this vendor are permitted then. **Values** enabled, disabled **OID** 1.3.6.1.4.1.3181.10.6.2.46.17.1.5 (authorizedMacsTreatAsVendorMac)

Group	**supplicant**
Path	Protocol.PACC.supplicant
Description	The 802.1x supplicant permits automatic login when a port is activated.

enable_supplicant	Generally enables the 802.1x supplicant function. **Values** enabled, disabled **OID** 1.3.6.1.4.1.3181.10.6.2.46.18.1.2 (supplicantEnableSupplicant)
port	Port through which the authorizing authority is reached. Usually this is the link port. **Value** PORT0-255 **OID** 1.3.6.1.4.1.3181.10.6.2.46.18.1.3 (supplicantPort)

©2026 MICROSENS GmbH & Co. KG - Hamm/Germany - www.microsens.com

action_on_link_down	When the supplicant link goes down, the local authenticated user ports can be deauthenticated as well.		
	Values	*NONE*	The user ports are not directly affected by the link down of the trunk.
		DEAUTHENTICATE	The user ports are deauthenticated (dropped) on link down of the trunk. They can reauthenticate when the trunk link resumes and the supplicant itself is authenticated again.
	OID	1.3.6.1.4.1.3181.10.6.2.46.18.1.4 (supplicantActionOnLinkDown)	
identity	Inner identity for tunneled EAP methods (e.g. EAP-TTLS)		
	Value	String, max. 32 characters.	
	OID	1.3.6.1.4.1.3181.10.6.2.46.18.1.5 (supplicantIdentity)	
anonymous_identity	Identity string for EAP-MD5. Also used as the unencrypted anonymous outer identity with EAP types that support different tunneled identity, e.g. EAP-TTLS.		
	Value	String, max. 32 characters.	
	OID	1.3.6.1.4.1.3181.10.6.2.46.18.1.6 (supplicantAnonymousIdentity)	
authentication_protocol	Space-separated list of accepted EAP methods. If not set, all listed methods are allowed. MD5 = insecure and does not generate keying material to be used as a Phase 2 method with PEAP or TTLS. PEAP = with tunneled EAP authentication. TTLS = with tunneled EAP or PAP/CHAP/ MSCHAP/MSCHAPV2 authentication. TLS = client and server certificate.		
	Value	String, max. 16 characters.	
	OID	1.3.6.1.4.1.3181.10.6.2.46.18.1.7 (supplicantAuthenticationProtocol)	
enter_password	Set a new authentication password which replaces the previous one. Note: trailing spaces or multiple spaces in the password are automatically removed.		
	Action	Excecute command with parameter string max. 128 characters.	
	OID	1.3.6.1.4.1.3181.10.6.2.46.18.1.8 (supplicantEnterPassword)	
encrypted_auth_password	The encrypted EAP password. Can be set with enter_password action.		
	Value	String, max. 128 characters.	
	OID	1.3.6.1.4.1.3181.10.6.2.46.18.1.9 (supplicantEncryptedAuthPassword)	

©2026 MICROSENS GmbH & Co. KG - Hamm/Germany - www.microsens.com

enter_private_key_password	Set a new private key password which replaces the previous one. Note: trailing spaces or multiple spaces in the password are automatically removed. **Action** Excecute command with parameter string max. 128 characters. **OID** 1.3.6.1.4.1.3181.10.6.2.46.18.1.10 (supplicantEnterPrivateKeyPassword)
encrypted_key_password	The encrypted private key password. Can be set with enter_private_key_password action. **Value** String, max. 128 characters. **OID** 1.3.6.1.4.1.3181.10.6.2.46.18.1.11 (supplicantEncryptedKeyPassword)
reauthenticate	Restarts the authentication process for testing and display the results. **Action** Excecute command. **OID** 1.3.6.1.4.1.3181.10.6.2.46.18.1.12 (supplicantReauthenticate)

Group	**change_of_authorization**
Path	Protocol.PACC.change_of_authorization
Description	This table configures optional support for coa feature. Coa permits central management of running sessions.

primary_dac_server_name	Symbolic name of a RADIUS server whose address is accepted as source for COA requests. **Value** String, max. 32 characters. **OID** 1.3.6.1.4.1.3181.10.6.2.46.19.1.2 (changeOfAuthorizationPrimaryDacServerName)
fallback_dac_server_name	Symbolic name of a RADIUS server whose address is accepted as source for COA requests. Leave empty when no fallback is required. Both primary and fallback servers are accepted in parallel. **Value** String, max. 32 characters. **OID** 1.3.6.1.4.1.3181.10.6.2.46.19.1.3 (changeOfAuthorizationFallbackDacServerName)
udp_port	UDP port used for receiving COA packets. Default: 3799 **Value** Number in range 1025-65535 **OID** 1.3.6.1.4.1.3181.10.6.2.46.19.1.4 (changeOfAuthorizationUdpPort)

©2026 MICROSENS GmbH & Co. KG - Hamm/Germany - www.microsens.com

require_authenticator	Verify the message authenticator with the shared secret stored in the corresponding radius server configuration. **Values** enabled, disabled **OID** 1.3.6.1.4.1.3181.10.6.2.46.19.1.5 (changeOfAuthorizationRequireAuthenticator)
require_event_timestamp	Require the event-timestamp radius attribute to be present in the request packet. This safeguards against replay attacks. **Values** enabled, disabled **OID** 1.3.6.1.4.1.3181.10.6.2.46.19.1.6 (changeOfAuthorizationRequireEventTimestamp)
event_timestamp_window	Maximum time difference accepted between current device time and event-timestamp in the request. Use of NTP time synchronization is recommended. **Value** Number in range 0-0xFFFFFFFF **OID** 1.3.6.1.4.1.3181.10.6.2.46.19.1.7 (changeOfAuthorizationEventTimestampWindow)

©2026 MICROSENS GmbH & Co. KG - Hamm/Germany - www.microsens.com

30.5 PACC Status Parameters

Group	**port_status**, for each port[0..24]
Path	Protocol.PACC.port_status[port]
Description	This table indicates the current port authentication state and contains the data for the last user or MAC that tried to authorize on a given port. To see all users in a multiuser environment refer to user_status table.

authorization_state

Indicates the port access control state.

Values		
	UNDEFINED	Startup condition
	DISABLED	PACC function is disabled
	UNAUTHORIZED	No authorization requests since last port link up or link is currently down
	PROCESSING	Authorization protocol in process
	AUTHORIZED	Port authorized successfully
	REJECTED	Last authorization request was rejected

OID 1.3.6.1.4.1.3181.10.6.2.46.100.1.2 (portStatusAuthorizationState)
1.0.8802.1.1.1.1.2.1.1.1 (dot1xAuthPaeState)

authorization_mode

Last authorization method applied on this port.

Values		
	NONE	Default value. No authentication requested yet
	VIA_MAC_TABLE	Authenticated via match to local mac_table
	MAC_VIA_RADIUS	Authenticated via a RADIUS server
	802_1X_VIA_RADIUS	Authenticated via using 802.1X protocol. The login was authenticated by a RADIUS server.
	VIA_MAC_EVENT_ONLY	Port is authorized due to setting MAC_EVENT_ONLY
	EDGE_802_1X_VIA_RADIUS	802.1X protocol was used for authentication. The authenticated the port is now open for any traffic from the connected port.

OID 1.3.6.1.4.1.3181.10.6.2.46.100.1.3 (portStatusAuthorizationMode)

edge_mode

Port is in edgemode by configuration or though dynamic assignment method.

Values true, false

OID 1.3.6.1.4.1.3181.10.6.2.46.100.1.4 (portStatusEdgeMode)

©2026 MICROSENS GmbH & Co. KG - Hamm/Germany - www.microsens.com

last_state_change	Indicates the last time the authorization state of this port was modified. **Value** String, max. 32 characters. **OID** 1.3.6.1.4.1.3181.10.6.2.46.100.1.5 (portStatusLastStateChange)
number_of_macs_to_learn	Indicates how many MAC addresses will be learned. This is a result of the learn_macs_now action command. **Value** Number in range 0-255 **OID** 1.3.6.1.4.1.3181.10.6.2.46.100.1.6 (portStatusNumberOfMacsToLearn)
number_of_learned_macs	This value indicates how many MAC addresses have actually been learned since the learn_macs_now command had been issued. **Value** Number in range 0-255 **OID** 1.3.6.1.4.1.3181.10.6.2.46.100.1.7 (portStatusNumberOfLearnedMacs)

Group	**port_mac_status**, for each port[0..24]
Path	Protocol.PACC.port_mac_status[port]
Description	This table indicates the current port authentication state and contains the data for the last user or MAC that tried to authorize on a given port. To see all users in a multiuser environment refer to user_status table.

authorization_state	Indicates the port access control state.		
	Values	*UNDEFINED*	Startup condition
		DISABLED	PACC function is disabled
		UNAUTHORIZED	No authorization requests since last port link up or link is currently down
		PROCESSING	Authorization protocol in process
		AUTHORIZED	Port authorized successfully
		REJECTED	Last authorization request was rejected
	OID	1.3.6.1.4.1.3181.10.6.2.46.101.1.2 (portMacStatusAuthorizationState)	
user_mac	Last MAC that attempted authorization.		
	Format	MAC Address *hh-hh-hh-hh-hh-hh* (*hh* = hexadecimal number between 00 to ff)	
	OID	1.3.6.1.4.1.3181.10.6.2.46.101.1.3 (portMacStatusUserMac)	

©2026 MICROSENS GmbH & Co. KG - Hamm/Germany - www.microsens.com

user_name	Last user that attempted authorization unless MAC authentication was used in which case this field is blank. **Value** String, max. 128 characters. **OID** 1.3.6.1.4.1.3181.10.6.2.46.101.1.4 (portMacStatusUserName)
vlan_alias	Last dynamically through radius assigned VLAN alias. **Value** String, max. 32 characters. **OID** 1.3.6.1.4.1.3181.10.6.2.46.101.1.5 (portMacStatusVlanAlias)
vlan_id	Last dynamically through radius assigned VLAN. **Value** Number in range 0-65535 **OID** 1.3.6.1.4.1.3181.10.6.2.46.101.1.6 (portMacStatusVlanId)
idle_timeout	This value reflects the idle timeout setting as received via RADIUS. It sets the maximum number of seconds before an idle session is terminated. **Value** Number in range 0-65535 **OID** 1.3.6.1.4.1.3181.10.6.2.46.101.1.7 (portMacStatusIdleTimeout)
session_timeout	This value reflects the session timeout setting as received via RADIUS. It sets the maximum number of seconds of service to be provided to the user before the session is terminated. **Value** Number in range 0-65535 **OID** 1.3.6.1.4.1.3181.10.6.2.46.101.1.8 (portMacStatusSessionTimeout)
filter_id	If the RADIUS attribute filter-id is used its value is reflected here. **Value** String, max. 32 characters. **OID** 1.3.6.1.4.1.3181.10.6.2.46.101.1.9 (portMacStatusFilterId)
last_state_change	Indicates the last time the authorization state of this port was modified. **Value** String, max. 32 characters. **OID** 1.3.6.1.4.1.3181.10.6.2.46.101.1.10 (portMacStatusLastStateChange)

Group	**port_802_1x_status**, for each port[0..24]
Path	Protocol.PACC.port_802_1x_status[port]
Description	This table indicates the current port authentication state and contains the data for the last user or MAC that tried to authorize on a given port. To see all users in a multiuser environment refer to user_status table.

©2026 MICROSENS GmbH & Co. KG - Hamm/Germany - www.microsens.com

authorization_state	Indicates the port access control state.		
	Values	*UNDEFINED*	Startup condition
		DISABLED	PACC function is disabled
		UNAUTHORIZED	No authorization requests since last port link up or link is currently down
		PROCESSING	Authorization protocol in process
		AUTHORIZED	Port authorized successfully
		REJECTED	Last authorization request was rejected
	OID	1.3.6.1.4.1.3181.10.6.2.46.102.1.2 (port8021xStatusAuthorizationState)	
user_mac	Last MAC that attempted authorization.		
	Format	MAC Address *hh-hh-hh-hh-hh-hh* (*hh* = hexadecimal number between 00 to ff)	
	OID	1.3.6.1.4.1.3181.10.6.2.46.102.1.3 (port8021xStatusUserMac)	
user_name	Last user that attempted authorization unless MAC authentication was used in which case this field is blank.		
	Value	String, max. 128 characters.	
	OID	1.3.6.1.4.1.3181.10.6.2.46.102.1.4 (port8021xStatusUserName)	
vlan_alias	Last dynamically through radius assigned VLAN alias.		
	Value	String, max. 32 characters.	
	OID	1.3.6.1.4.1.3181.10.6.2.46.102.1.5 (port8021xStatusVlanAlias)	
vlan_id	Last dynamically through radius assigned VLAN.		
	Value	Number in range 0-65535	
	OID	1.3.6.1.4.1.3181.10.6.2.46.102.1.6 (port8021xStatusVlanId)	
idle_timeout	This value reflects the idle timeout setting as received via RADIUS. It sets the maximum number of seconds before an idle session is terminated.		
	Value	Number in range 0-65535	
	OID	1.3.6.1.4.1.3181.10.6.2.46.102.1.7 (port8021xStatusIdleTimeout)	
session_timeout	This value reflects the session timeout setting as received via RADIUS. It sets the maximum number of seconds of service to be provided to the user before the session is terminated.		
	Value	Number in range 0-65535	
	OID	1.3.6.1.4.1.3181.10.6.2.46.102.1.8 (port8021xStatusSessionTimeout)	

©2026 MICROSENS GmbH & Co. KG - Hamm/Germany - www.microsens.com

filter_id	If the RADIUS attribute filter-id is used its value is reflected here. **Value** String, max. 32 characters. **OID** 1.3.6.1.4.1.3181.10.6.2.46.102.1.9 (port8021xStatusFilterId)
last_state_change	Indicates the last time the authorization state of this port was modified. **Value** String, max. 32 characters. **OID** 1.3.6.1.4.1.3181.10.6.2.46.102.1.10 (port8021xStatusLastStateChange)

Group	**user_status**, for all PACC user status indices [1..250]
Path	Protocol.PACC.user_status[index]
Description	This table lists all users authorized or rejected via some form of port access control. Use filter actions for easier viewing.

entry_state	Indicates if this record displays a currently active login or a history entry of a previous authentication which is invalidated by now.	
	Values	*UNUSED* Entry is not yet used
		INACTIVE Entry displays history of a previous active entry
		ACTIVE Entry indicates a currently active entry
	OID	1.3.6.1.4.1.3181.10.6.2.46.103.1.2 (userStatusEntryState)
authorization_state	Indicates the port access control state resulting from this authorization attempt .	
	Values	*UNDEFINED* Startup condition
		DISABLED PACC function is disabled
		UNAUTHORIZED No authorization requests since last port link up or link is currently down
		PROCESSING Authorization protocol in process
		AUTHORIZED Port authorized successfully
		REJECTED Last authorization request was rejected
	OID	1.3.6.1.4.1.3181.10.6.2.46.103.1.3 (userStatusAuthorizationState)

©2026 MICROSENS GmbH & Co. KG - Hamm/Germany - www.microsens.com

authorization_mode	Authorization method used for this authorization attempt.		
	Values	*NONE*	Default value. No authentication requested yet
		VIA_MAC_TABLE	Authenticated via match to local mac_table
		MAC_VIA_RADIUS	Authenticated via a RADIUS server
		802_1X_VIA_RADIUS	Authenticated via using 802.1X protocol. The login was authenticated by a RADIUS server.
		VIA_MAC_EVENT_ONLY	Port is authorized due to setting MAC_EVENT_ONLY
		EDGE_802_1X_VIA_RADIUS	802.1X protocol was used for authentication. The authenticated the port is now open for any traffic from the connected port.
	OID	1.3.6.1.4.1.3181.10.6.2.46.103.1.4 (userStatusAuthorizationMode)	
port	Indicates the port at which this MAC is connected.		
	Value	PORT0-255	
	OID	1.3.6.1.4.1.3181.10.6.2.46.103.1.5 (userStatusPort)	
user_mac	MAC used for this authorization attempt.		
	Format	MAC Address *hh-hh-hh-hh-hh-hh* (*hh* = hexadecimal number between 00 to ff)	
	OID	1.3.6.1.4.1.3181.10.6.2.46.103.1.6 (userStatusUserMac)	
user_name	User that attempted authorization unless MAC authentication was used in which case this field is blank.		
	Value	String, max. 128 characters.	
	OID	1.3.6.1.4.1.3181.10.6.2.46.103.1.7 (userStatusUserName)	
vlan_alias	Dynamically through radius assigned VLAN alias.		
	Value	String, max. 32 characters.	
	OID	1.3.6.1.4.1.3181.10.6.2.46.103.1.8 (userStatusVlanAlias)	
vlan_id	Dynamically through radius assigned VLAN.		
	Value	Number in range 0-65535	
	OID	1.3.6.1.4.1.3181.10.6.2.46.103.1.9 (userStatusVlanId)	
idle_timeout	This value reflects the idle timeout setting as received via RADIUS. It sets the maximum number of seconds before an idle session is terminated.		
	Value	Number in range 0-65535	
	OID	1.3.6.1.4.1.3181.10.6.2.46.103.1.10 (userStatusIdleTimeout)	

©2026 MICROSENS GmbH & Co. KG - Hamm/Germany - www.microsens.com

session_timeout	This value reflects the session timeout setting as received via RADIUS. It sets the maximum number of seconds of service to be provided to the user before the session is terminated. **Value** Number in range 0-65535 **OID** 1.3.6.1.4.1.3181.10.6.2.46.103.1.11 (userStatusSessionTimeout)
filter_id	If the RADIUS attribute filter-id is used its value is reflected here. **Value** String, max. 32 characters. **OID** 1.3.6.1.4.1.3181.10.6.2.46.103.1.12 (userStatusFilterId)
login_time_stamp	Indicates the time when this record was created. **Value** String, max. 32 characters. **OID** 1.3.6.1.4.1.3181.10.6.2.46.103.1.13 (userStatusLoginTimeStamp)
login_epoch	Indicates the time when this record was created. in Linux time since the epoch format. **Value** Number in range 0-0xFFFFFFFF **OID** 1.3.6.1.4.1.3181.10.6.2.46.103.1.14 (userStatusLoginEpoch)

©2026 MICROSENS GmbH & Co. KG - Hamm/Germany - www.microsens.com

31 Multicast Traffic Filtering (IGMP Snooping)

31.1 Key Features

IGMP Snooping

Snooping of Internet Group Management Protocol (IGMPv1/v2/v3) for IPv4. Automatic detection and forwarding of IPv4 multicast-streams. Unregistered packets can be flooded or blocked. Multicast routers can be detected by discovery or by query message.

IGMP snooping constrains IPv4 multicast traffic at Layer 2 by configuring Layer 2 LAN ports dynamically to forward IPv4 multicast traffic only to those ports that want to receive it.

IGMP Snooping per VLAN

Automatic detection and forwarding of IPv4 multicast-streams independent for each configured VLAN.

MLD Snooping

Snooping of Multicast Listener Discovery (MLDv1/v2) for IPv6. Automatic detection and forwarding of IPv6 multicast-streams. Multicast routers can be detected by discovery or by query message.

MLD snooping constrains IPv6 multicast traffic at Layer 2 by configuring Layer 2 LAN ports dynamically to forward IPv6 multicast traffic only to those ports that want to receive it.

31.2 Functional Description

IGMP Snooping

To reduce multicast network traffic, the switch can listen to IGMP communications between Multicast sender and receiver ('Snooping') and adjust its internal forwarding database accordingly. By this means, multicast traffic is only forwarded to those ports where receivers are connected that have joined the corresponding multicast group.

©2026 MICROSENS GmbH & Co. KG - Hamm/Germany - www.microsens.com

31.3 IGMP CLI Command Reference

The following table lists all CLI commands applicable for this feature section. For each parameter, the access mode is given:

R = Read Only, R/W = Read/Write, X = Executable Action.

Please note that the effective access rights are dependent on the login level of the user.

Category	Group	Table	Parameter	Options	Access	Description
Protocol.						
	igmp.					IGMP snooping constrains IPv4 multicast traffic at Layer 2 by configuring Layer 2 LAN ports dynamically to forward IPv4 multicast traffic only to those ports that want to receive it. MLD does the same for IPv6 traffic.
			enable_igmp_snooping		R/W	General enable of the IGMP snooping function. When disabled all IGMP snooping in all VLANs is disabled as well.
			enable_mld_snooping		R/W	General enable of the MLD snooping function. When disabled all MLD snooping in all VLANs is disabled as well.
			enable_igmp_querier		R/W	General enable of the IGMP querier function.
			igmp_version		R/W	Select IGMP version to be used. Typically V2.
			show_multicast_for_vlan		X	Filter MAC table to show only multicast MACs associated with a given VLAN range. Supply VLAN ID as parameter. Syntax example: igmp.show_multicast_for_vlan = 1-4,1000-2000.
			show_multicast_for_port		X	Filter MAC table to show only multicast MACs associated with a given port range. Supply port as parameter. The shorthand port format like 1 for 1/1 may be used. Syntax examples: igmp.show_multicast_for_port = 1/2,1/5 or igmp.show_multicast_for_port = 1-3,5.
		config[DYNAMIC].				This table defines IGMP snooping parameter per VLAN. The table entries are referenced by VLAN ID and must match corresponding VLAN filter entries defined under vlan.filter_config.vlan_id. Any number of table entries can be created to configure unique settings for different VLANs. The default entry for VLAN ID=0 cannot be deleted and it used when no VLAN are used in the system.

©2026 MICROSENS GmbH & Co. KG - Hamm/Germany - www.microsens.com

vlan_id	R/W	Defines IGMP snooping table entry associated with this VLAN ID. This is the key value for the table.VLAN ID 0 is used to define the IGMP settings when VLANs are not used. Type '=:' to edit, use index '[*] = new_vlan:' to add an entry. Edit string to nothing to delete entry.
enable_igmp_snooping	R/W	Enable IGMP (IPv4) snooping for this particular VLAN.
enable_mld_snooping	R/W	Enable MLD (IPv6) snooping for this particular VLAN.
enable_igmp_querier	R/W	Enable IGMP querier for this particular VLAN.
snooping_ports	R/W	This parameter permits port selective IGMP/MLD snooping enabling. When empty all ports are enabled! Syntax: slot/port, slot/port or use hex value for quick setup. Example: = 0xf (ports 1-4)
static_router_ports	R/W	When set corresponding ports will be marked as static router ports. Upon default no ports will be marked. Syntax: slot/port, slot/port or use hex value for quick setup. Example: = 0x30 (ports 5-6)
multicast_router_detection	R/W	Defines the mode for detecting the router port.
enable_report_aggregation	R/W	When enabled limits the number of reports received from same subnet to be transmitted only once to the router.
enable_flooding_unregister_pkt	R/W	When enabled unregistered multicast streams are flooded on all ports (which are member of the source VLAN of this stream). When disabled unregistered multicast streams are forwarded on static router ports only.
mcast_group_limit	R/W	Indicates the number of multicast groups in the table.
group_membership_interval	R/W	IGMP group_membership_interval time in seconds.
max_response_time	R/W	IGMP response time in seconds.
enable_fast_leave	R/W	Enables the software to remove the multicast group when it receives an IGMP leave report without first sending an IGMP query message to check if other users still require this group. This parameter is used for IGMPv2 hosts when only one host is present on each VLAN port.
last_member_query_time	R/W	Sets the interval in seconds that the software waits after sending an IGMP query to verify that no hosts that want to receive a particular multicast group to remain on a network segment. If no hosts respond before the last_member_query_time expires, the multicast group is removed from the associated VLAN port.
neighbor_dead_interval	R/W	IGMP neighbor dead interval in seconds in case of router_discovery mode.
router_aging_time	R/W	IGMP router aging time in seconds.

©2026 MICROSENS GmbH & Co. KG - Hamm/Germany - www.microsens.com

static_multicast_groups[DYNAMIC].			This table may be used to enter the multicast addresses of other protocols beside IGMP, that need to be forwarded when IGMP snooping is enabled. This can be used instead of flood_unregistered_packets parameter and reduces the traffic in the network.
	name	R/W	Unique name to reference this entry and to remember whose MAC address is entered.
	description	R/W	Enter any information required to remember what this rule is intended to do.
	multicast_mac	R/W	MAC address entry.
	forwarding_port_mask	R/W	Enter the ports to which this multicast should be forwarded. A value of 0 disables this entry. Syntax: slot/port, slot/port or use hex value for quick setup. Example: = 0xf (ports 1-4)
	vlan_id	R/W	VLAN on which the packets is entering.
status.			This table contains operational counters of the IGMP snooping module.
	igmp_router_ports	R	Displays the IGMP router ports list
	selected_querier	R	Displays which device acts as the querier
	rx_general_queries	R	Displays the number of received general queries.
	rx_group_queries	R	Displays the number of received group queries.
	rx_reports	R	Displays the number of received report messages.
	rx_leaves	R	Displays the number of received leave messages.
	rx_advertisements	R	Displays the number of received advertisements.
	rx_terminations	R	Displays the number of received terminations.
	rx_unsupported	R	Displays the number of received unsupported messages.
	rx_errors	R	Displays the number of received error packets.
	tx_solicitations	R	Displays the number of transmitted solicitation messages.
mld_status.			This table contains operational counters of the MLD snooping module.
	mld_router_ports	R	Displays the gimp router ports list
	selected_querier	R	Displays which device acts as the querier
	rx_general_queries	R	Displays the number of received general queries.
	rx_group_queries	R	Displays the number of received group queries.
	rx_reports	R	Displays the number of received report messages.
	rx_leaves	R	Displays the number of received leave messages.

©2026 MICROSENS GmbH & Co. KG - Hamm/Germany - www.microsens.com

rx_advertisements	R	Displays the number of received advertisements.
rx_terminations	R	Displays the number of received terminations.
rx_unsupported	R	Displays the number of received unsupported messages.
rx_errors	R	Displays the number of received error packets.
tx_solicitations	R	Displays the number of transmitted solicitation messages.

©2026 MICROSENS GmbH & Co. KG - Hamm/Germany - www.microsens.com

31.4 IGMP Configuration Parameters

Group	**General Parameters**
Path	Protocol.IGMP
enable_igmp_snooping	General enable of the IGMP snooping function. When disabled all IGMP snooping in all VLANs is disabled as well. **Values** enabled, disabled **OID** 1.3.6.1.4.1.3181.10.6.2.40.1 (igmpEnableIgmpSnooping) 1.3.6.1.2.1.85.1.1.1.1 (igmpInterfaceIfIndex)
enable_mld_snooping	General enable of the MLD snooping function. When disabled all MLD snooping in all VLANs is disabled as well. **Values** enabled, disabled **OID** 1.3.6.1.4.1.3181.10.6.2.40.2 (igmpEnableMldSnooping) 1.3.6.1.2.1.85.1.1.1.1 (igmpInterfaceIfIndex)
enable_igmp_querier	General enable of the IGMP querier function. **Values** enabled, disabled **OID** 1.3.6.1.4.1.3181.10.6.2.40.3 (igmpEnableIgmpQuerier) 1.3.6.1.2.1.85.1.1.1.1 (igmpInterfaceIfIndex)
igmp_version	Select IGMP version to be used. Typically V2. **Values** *V1* IGMP version 1 *V2* IGMP version 2 *V3* IGMP version 3 **OID** 1.3.6.1.4.1.3181.10.6.2.40.4 (igmpIgmpVersion) 1.3.6.1.2.1.85.1.1.1.1 (igmpInterfaceIfIndex)
show_multicast_for_vlan	Filter MAC table to show only multicast MACs associated with a given VLAN range. Supply VLAN ID as parameter. Syntax example: igmp.show_multicast_for_vlan = 1-4,1000-2000. **Action** Excecute command with parameter string max. 32 characters. **OID** 1.3.6.1.4.1.3181.10.6.2.40.5 (igmpShowMulticastForVlan)

©2026 MICROSENS GmbH & Co. KG - Hamm/Germany - www.microsens.com

show_multicast_for_port	Filter MAC table to show only multicast MACs associated with a given port range. Supply port as parameter. The shorthand port format like 1 for 1/1 may be used. Syntax examples: igmp.show_multicast_for_port = 1/2,1/5 or igmp.show_multicast_for_port = 1-3,5. **Action** Excecute command with parameter string max. 32 characters. **OID** 1.3.6.1.4.1.3181.10.6.2.40.6 (igmpShowMulticastForPort)

Group	**config**, dynamical size
Path	Protocol.IGMP.config
Description	This table defines IGMP snooping parameter per VLAN. The table entries are referenced by VLAN ID and must match corresponding VLAN filter entries defined under vlan.filter_config.vlan_id. Any number of table entries can be created to configure unique settings for different VLANs. The default entry for VLAN ID=0 cannot be deleted and it used when no VLAN are used in the system.

vlan_id	Defines IGMP snooping table entry associated with this VLAN ID. This is the key value for the table.VLAN ID 0 is used to define the IGMP settings when VLANs are not used. Type '=:' to edit, use index '[*] = new_vlan:' to add an entry. Edit string to nothing to delete entry. **Value** String, max. 4 characters. **OID** 1.3.6.1.4.1.3181.10.6.2.40.7.1.2 (configVlanId)
enable_igmp_snooping	Enable IGMP (IPv4) snooping for this particular VLAN. **Values** enabled, disabled **OID** 1.3.6.1.4.1.3181.10.6.2.40.7.1.3 (configEnableIgmpSnooping)
enable_mld_snooping	Enable MLD (IPv6) snooping for this particular VLAN. **Values** enabled, disabled **OID** 1.3.6.1.4.1.3181.10.6.2.40.7.1.4 (configEnableMldSnooping)
enable_igmp_querier	Enable IGMP querier for this particular VLAN. **Values** enabled, disabled **OID** 1.3.6.1.4.1.3181.10.6.2.40.7.1.5 (configEnableIgmpQuerier)

©2026 MICROSENS GmbH & Co. KG - Hamm/Germany - www.microsens.com

snooping_ports	This parameter permits port selective IGMP/MLD snooping enabling. When empty all ports are enabled! Syntax: slot/port, slot/port or use hex value for quick setup. Example: = 0xf (ports 1-4) **Value** PORTMASK0-0xFFFFFFFF **OID** 1.3.6.1.4.1.3181.10.6.2.40.7.1.6 (configSnoopingPorts)
static_router_ports	When set corresponding ports will be marked as static router ports. Upon default no ports will be marked. Syntax: slot/port, slot/port or use hex value for quick setup. Example: = 0x30 (ports 5-6) **Value** PORTMASK0-0xFFFFFFFF **OID** 1.3.6.1.4.1.3181.10.6.2.40.7.1.7 (configStaticRouterPorts)
multicast_router_detection	Defines the mode for detecting the router port. **Values** *ROUTER_DISCOVERY* Mark router port only on receiving advertisements *QUERY_MESSAGE* Mark router port only on receiving query message **OID** 1.3.6.1.4.1.3181.10.6.2.40.7.1.8 (configMulticastRouterDetection)
enable_report_aggregation	When enabled limits the number of reports received from same subnet to be transmitted only once to the router. **Values** enabled, disabled **OID** 1.3.6.1.4.1.3181.10.6.2.40.7.1.9 (configEnableReportAggregation)
enable_flooding_unregister_pkt	When enabled unregistered multicast streams are flooded on all ports (which are member of the source VLAN of this stream). When disabled unregistered multicast streams are forwarded on static router ports only. **Values** enabled, disabled **OID** 1.3.6.1.4.1.3181.10.6.2.40.7.1.10 (configEnableFloodingUnregisterPkt)
mcast_group_limit	Indicates the number of multicast groups in the table. **Value** Number in range 10-256 **OID** 1.3.6.1.4.1.3181.10.6.2.40.7.1.11 (configMcastGroupLimit)
group_membership_interval	IGMP group_membership_interval time in seconds. **Value** Number in range 200-1000 **OID** 1.3.6.1.4.1.3181.10.6.2.40.7.1.12 (configGroupMembershipInterval)

©2026 MICROSENS GmbH & Co. KG - Hamm/Germany - www.microsens.com

max_response_time	IGMP response time in seconds. **Value** Number in range 1-25 **OID** 1.3.6.1.4.1.3181.10.6.2.40.7.1.13 (configMaxResponseTime) 1.3.6.1.2.1.85.1.1.1.6 (igmpInterfaceQueryMaxResponseTime)
enable_fast_leave	Enables the software to remove the multicast group when it receives an IGMP leave report without first sending an IGMP query message to check if other users still require this group. This parameter is used for IGMPv2 hosts when only one host is present on each VLAN port. **Values** enabled, disabled **OID** 1.3.6.1.4.1.3181.10.6.2.40.7.1.14 (configEnableFastLeave)
last_member_query_time	Sets the interval in seconds that the software waits after sending an IGMP query to verify that no hosts that want to receive a particular multicast group to remain on a network segment. If no hosts respond before the last_member_query_time expires, the multicast group is removed from the associated VLAN port. **Value** Number in range 1-175 **OID** 1.3.6.1.4.1.3181.10.6.2.40.7.1.15 (configLastMemberQueryTime) 1.3.6.1.2.1.85.1.1.1.15 (igmpInterfaceLastMembQueryIntvl)
neighbor_dead_interval	IGMP neighbor dead interval in seconds in case of router_discovery mode. **Value** Number in range 2-1000 **OID** 1.3.6.1.4.1.3181.10.6.2.40.7.1.16 (configNeighborDeadInterval) 1.3.6.1.2.1.85.1.1.1.8 (igmpInterfaceQuerierExpiryTime)
router_aging_time	IGMP router aging time in seconds. **Value** Number in range 2-1000 **OID** 1.3.6.1.4.1.3181.10.6.2.40.7.1.17 (configRouterAgingTime) 1.3.6.1.2.1.85.1.1.1.7 (igmpInterfaceQuerierUpTime)

©2026 MICROSENS GmbH & Co. KG - Hamm/Germany - www.microsens.com

Group	**static_multicast_groups**, dynamical size
Path	Protocol.IGMP.static_multicast_groups
Description	This table may be used to enter the multicast addresses of other protocols beside IGMP, that need to be forwarded when IGMP snooping is enabled. This can be used instead of flood_unregistered_packets parameter and reduces the traffic in the network.

name	Unique name to reference this entry and to remember whose MAC address is entered.	
	Value	String, max. 32 characters.
	OID	1.3.6.1.4.1.3181.10.6.2.40.8.1.2 (staticMulticastGroupsName)
description	Enter any information required to remember what this rule is intended to do.	
	Value	String, max. 128 characters.
	OID	1.3.6.1.4.1.3181.10.6.2.40.8.1.3 (staticMulticastGroupsDescription)
multicast_mac	MAC address entry.	
	Format	MAC Address *hh-hh-hh-hh-hh-hh* (*hh* = hexadecimal number between 00 to ff)
	OID	1.3.6.1.4.1.3181.10.6.2.40.8.1.4 (staticMulticastGroupsMulticastMac)
forwarding_port_mask	Enter the ports to which this multicast should be forwarded. A value of 0 disables this entry. Syntax: slot/port, slot/port or use hex value for quick setup. Example: = 0xf (ports 1-4)	
	Value	PORTMASK0-0xFFFFFFFF
	OID	1.3.6.1.4.1.3181.10.6.2.40.8.1.5 (staticMulticastGroupsForwardingPortMask)
vlan_id	VLAN on which the packets is entering.	
	Value	Number in range 0-4095
	OID	1.3.6.1.4.1.3181.10.6.2.40.8.1.6 (staticMulticastGroupsVlanId)

©2026 MICROSENS GmbH & Co. KG - Hamm/Germany - www.microsens.com

31.5 IGMP Status Parameters

Group	**status**
Path	Protocol.IGMP.status
Description	This table contains operational counters of the IGMP snooping module.

igmp_router_ports	Displays the IGMP router ports list	
	Value	PORTMASK0-0xFFFFFFFF
	OID	1.3.6.1.4.1.3181.10.6.2.40.100.1.2 (statusIgmpRouterPorts)
selected_querier	Displays which device acts as the querier	
	Value	String, max. 32 characters.
	OID	1.3.6.1.4.1.3181.10.6.2.40.100.1.3 (statusSelectedQuerier)
rx_general_queries	Displays the number of received general queries.	
	Value	Number in range 0-0xFFFFFFFF
	OID	1.3.6.1.4.1.3181.10.6.2.40.100.1.4 (statusRxGeneralQueries)
rx_group_queries	Displays the number of received group queries.	
	Value	Number in range 0-0xFFFFFFFF
	OID	1.3.6.1.4.1.3181.10.6.2.40.100.1.5 (statusRxGroupQueries)
rx_reports	Displays the number of received report messages.	
	Value	Number in range 0-0xFFFFFFFF
	OID	1.3.6.1.4.1.3181.10.6.2.40.100.1.6 (statusRxReports)
rx_leaves	Displays the number of received leave messages.	
	Value	Number in range 0-0xFFFFFFFF
	OID	1.3.6.1.4.1.3181.10.6.2.40.100.1.7 (statusRxLeaves)
rx_advertisements	Displays the number of received advertisements.	
	Value	Number in range 0-0xFFFFFFFF
	OID	1.3.6.1.4.1.3181.10.6.2.40.100.1.8 (statusRxAdvertisements)
rx_terminations	Displays the number of received terminations.	
	Value	Number in range 0-0xFFFFFFFF
	OID	1.3.6.1.4.1.3181.10.6.2.40.100.1.9 (statusRxTerminations)

©2026 MICROSENS GmbH & Co. KG - Hamm/Germany - www.microsens.com

rx_unsupported	Displays the number of received unsupported messages. **Value** Number in range 0-0xFFFFFFFF **OID** 1.3.6.1.4.1.3181.10.6.2.40.100.1.10 (statusRxUnsupported)
rx_errors	Displays the number of received error packets. **Value** Number in range 0-0xFFFFFFFF **OID** 1.3.6.1.4.1.3181.10.6.2.40.100.1.11 (statusRxErrors)
tx_solicitations	Displays the number of transmitted solicitation messages. **Value** Number in range 0-0xFFFFFFFF **OID** 1.3.6.1.4.1.3181.10.6.2.40.100.1.12 (statusTxSolicitations)

Group	**mld_status**
Path	Protocol.IGMP.mld_status
Description	This table contains operational counters of the MLD snooping module.

mld_router_ports	Displays the gimp router ports list **Value** PORTMASK0-0xFFFFFFFF **OID** 1.3.6.1.4.1.3181.10.6.2.40.101.1.2 (mldStatusMldRouterPorts)
selected_querier	Displays which device acts as the querier **Value** String, max. 32 characters. **OID** 1.3.6.1.4.1.3181.10.6.2.40.101.1.3 (mldStatusSelectedQuerier)
rx_general_queries	Displays the number of received general queries. **Value** Number in range 0-0xFFFFFFFF **OID** 1.3.6.1.4.1.3181.10.6.2.40.101.1.4 (mldStatusRxGeneralQueries)
rx_group_queries	Displays the number of received group queries. **Value** Number in range 0-0xFFFFFFFF **OID** 1.3.6.1.4.1.3181.10.6.2.40.101.1.5 (mldStatusRxGroupQueries)
rx_reports	Displays the number of received report messages. **Value** Number in range 0-0xFFFFFFFF **OID** 1.3.6.1.4.1.3181.10.6.2.40.101.1.6 (mldStatusRxReports)

©2026 MICROSENS GmbH & Co. KG - Hamm/Germany - www.microsens.com

rx_leaves	Displays the number of received leave messages.	
	Value	Number in range 0-0xFFFFFFFF
	OID	1.3.6.1.4.1.3181.10.6.2.40.101.1.7 (mldStatusRxLeaves)
rx_advertisements	Displays the number of received advertisements.	
	Value	Number in range 0-0xFFFFFFFF
	OID	1.3.6.1.4.1.3181.10.6.2.40.101.1.8 (mldStatusRxAdvertisements)
rx_terminations	Displays the number of received terminations.	
	Value	Number in range 0-0xFFFFFFFF
	OID	1.3.6.1.4.1.3181.10.6.2.40.101.1.9 (mldStatusRxTerminations)
rx_unsupported	Displays the number of received unsupported messages.	
	Value	Number in range 0-0xFFFFFFFF
	OID	1.3.6.1.4.1.3181.10.6.2.40.101.1.10 (mldStatusRxUnsupported)
rx_errors	Displays the number of received error packets.	
	Value	Number in range 0-0xFFFFFFFF
	OID	1.3.6.1.4.1.3181.10.6.2.40.101.1.11 (mldStatusRxErrors)
tx_solicitations	Displays the number of transmitted solicitation messages.	
	Value	Number in range 0-0xFFFFFFFF
	OID	1.3.6.1.4.1.3181.10.6.2.40.101.1.12 (mldStatusTxSolicitations)

©2026 MICROSENS GmbH & Co. KG - Hamm/Germany - www.microsens.com

32 Dynamic Host Configuration Protocol (DHCP)

32.1 Key Features

DHCP Snooping

(Not available with hardware 1.5 / Only available on ports [2/*] with hardware 1.6)
DHCP snooping records IP addresses, VLAN information, etc. to record trusted interfaces. DHCP snooping supresses DHCP traffic from untrusted interfaces.

Secures network against man-in-the-middle attacks.

IP-MAC Binding Table

(Not available with hardware 1.5 / Only available on ports [2/*] with hardware 1.6)
A table lists the MAC-IP bindings of the untrusted ports (only) as discovered through DHCP snooping.

DHCP Filtering

(Not available with hardware 1.5 / Only available on ports [2/*] with hardware 1.6)
DHCP Filtering prevents DHCP being injected from a user port. This feature acts on IPv4 and IPv6 alike.

Secures IP network against malicious users.

DHCP Flooding Detection

(Not available with hardware 1.5 / Only available on ports [2/*] with hardware 1.6)
Attempts to detect a DHCP attack and shuts down the access port when too many DHCP messages ingress on the port.

Secures IP network against malicious users.

DHCP relay agent with option 82

When enabled, the switch will append a unique port/switch identification to a DHCP request from an access port. This enables the use of a distant DHCP server and to better control which IP address to serve. This feature supports IPv4 and IPv6. Port and unit information are configurable.

Supports accurate IP adressing policies: When equipment is exchanged it is ensured the IP address remains unchanged.

DHCP Options 66/67

Unit configuration or software updates controlled via DHCP option 66/67 mechanism. A CLI script can be downloaded which in turn may request further download or configuration changes

In large networks updates can be automated to take place as soon as a unit goes online. The script is a very powerful tool.

Dynamic ARP Inspection

(Not available with hardware 1.5 / Only available on ports [2/*] with hardware 1.6)
Incoming ARPs are being verfied against IP/MAC relation database provided by DHCP snooping. In addition an access list (ACL) is used for verification. In addition too many ARPs can lead to the port being blocked to prevent ARP attacks.

©2026 MICROSENS GmbH & Co. KG - Hamm/Germany - www.microsens.com

Dynamic ARP Inspection helps make sure of user integrity by preventing malicious users from exploiting the insecure nature of the ARP protocol.

PPPoE Snooping

PPP over Ethernet is used by carriers to identify the customer port. When a user signs-in, The Switch will automatically insert a configurable information that will allow the network to identifiy the originating port and device.

Permits carriers to use the Switch as Internet access gateway.

PPPoE variable Remote and Circuit Ids

PPP over Ethernet is used by carriers to identify the customer port. The fields for remote-id and circuit-id can be configured in various ways to match network requirements.

Permits carriers to use the better adapt the switch to the desired addressing needs.

RADIUS controlled dynamic IP-Address provisioning with DHCP

This function applies the IP configuration by DHCP to a successful authorized host. The IP parameters are received from the RADIUS server when granting network access to the host.

Permits centralized network provisioning via RADIUS. The attributes Framed-IP-Address(8) and Framed-IP-Netmask(9) are used.

DHCP Server

When enabled, this function provides an IP address to other computers. The address range and lease time is configurable.

A local DHCP can be useful in island configrations where no other server is reachable.

32.2 Functional Description

Dynamic Host Configuration Protocol (DHCP) is a protocol for assigning dynamic IP addresses to devices on a network. With dynamic addressing, a device can have a different IP address every time it connects to the network. In some systems, the device's IP address can even change while it is still connected. DHCP also supports a mix of static and dynamic IP addresses.

Dynamic addressing simplifies network administration because the software keeps track of IP addresses rather than requiring an administrator to manage the task. This means that a new computer can be added to a network without the hassle of manually assigning it a unique IP address.

©2026 MICROSENS GmbH & Co. KG - Hamm/Germany - www.microsens.com

32.3 DHCP CLI Command Reference

The following table lists all CLI commands applicable for this feature section. For each parameter, the access mode is given:

R = Read Only, R/W = Read/Write, X = Executable Action.

Please note that the effective access rights are dependent on the login level of the user.

Category	Group	Table	Parameter	Options	Access	Description
Protocol.						
	dhcp.					DHCP Relay Agent, DHCP snooping and related ARP inspection
			enable_dhcp_relay		R/W	General enable of DHCP relay function.
			enable_dhcp_snooping		R/W	General enable of DHCP snooping function.
			enable_dhcp_server		R/W	General enable of DHCP server function.
			enable_pppoe_snooping		R/W	General enable of PPPoE snooping also known as PPPoE Intermediate Agent function.
			enable_arp_inspection		R/W	General enable of ARP inspection function.
			unblock_port		X	This function may be used to unblock a port that has been set to blocking state due to DHCP flooding or due to ARP storm detection. The shorthand port format like 1 for 1/1 may be used. Syntax examples: dhcp.unblock_port = 1/2,1/5 or dhcp.unblock_port = 1/1-1/4. Also the syntax .. = 0-5 to unblock the first 6 ports is supported.
			clear_snooping_table		X	This function may be used to clear the content of the DHCP snooping table.
		relay_config.				This configures the DHCP relay option 82. It can be used to supply information from which port a DHCP request came in order to supply an IP based on the physical location of the requestor.
			dhcp_server_address		R/W	Defines host address or network address where the DHCP server(s) resides. Also known as ip_helper_address.
			remote_id_source		R/W	Defines how the switch is identified when DHCP option 82 is used. (Suboption2)
			custom_remote_id		R/W	This remote id is used for option 82 when 'remote_id_source' is set to USER_DEFINED.

©2026 MICROSENS GmbH & Co. KG - Hamm/Germany - www.microsens.com

	circuit_id_source	R/W	Defines how the ports are identified when option 82 is used. (Suboption1)
relay_port_config[PORT].			This configures the DHCP relay option 82. It can be used to supply information from which port a DHCP request came in order to supply an IP based on the physical location of the requestor.
	enable_dhcp_relay	R/W	When enabled incoming DHCP requests are redirected to the DHCP server or network specified in 'dhcp.relay_config'
	enable_option_82	R/W	When enabled incoming DHCP requests are modified in 'dhcp.relay_config'
server_config.			This configures the DHCP server. Most configuration data are taken from the IP and IP.ip_v4_config table including domain name, gateway and subnet mask. The DHCP server functionality is limited to the Management VLAN.
	start_ip_address	R/W	This defines the lowest IP address which is served. Make sure that the configured static IP of this device is reachable from this address.
	end_ip_address	R/W	This defines the highest IP address which is served. Make sure that the configured static IP of this device is reachable from this address.
	lease_time	R/W	DHCP lease time in seconds. When a device is no longer active for the defined time, its address is released. When a device reconnects the previous IP is served if possible.
	show_leases	X	This action can be used to display the assigned MAC - IP relations
snooping_port_config[PORT].			This configures the DHCP snooping function. DHCP snooping acts like a DHCP firewall between access and link ports. When enabled it ensures that for untrusted ports only DHCP requests are accepted. This prevents malicious users from injecting fake DHCP frames and thus invalid IP addresses.
	enable_dhcp_snooping	R/W	This enables the DHCP snooping function per port.
	dhcp_filtering	R/W	DHCP filtering prevents DHCP responses being injected from a local access port. It acts like a DHCP firewall between access and link ports.

©2026 MICROSENS GmbH & Co. KG - Hamm/Germany - www.microsens.com

	snooping_trust	R/W	DHCP responses are only accepted when they ingress on a trusted port. Typically these are the link ports. AUTO uses the port role and declares all up or downlink ports as trusted.
	accept_ingress_option82	R/W	Normally incoming DHCP request incoming with Option 82 set will be discarded. When enabled then this check is ignored.
	mac_address_verification	R/W	When a packet is received on an untrusted interface, and the source MAC address and the DHCP client MAC address do not match and this feature is enabled, the packet is dropped.
	dhcp_rate_limiting	R/W	Defines how many DHCP request are accepted per second. When the limit is reached, DHCP flooding is assumed and the port is blocked. The value 0 disables the rate limit check.
	clear_snooping_statistics	X	Reset all DHCP related statistics and reason. The snooping binding table is not affected.
pppoe_config.			This table defines the general parameter for PPPoE Intermediate Agent feature.
	vendor_id	R/W	Vendor identification that this device adds to a PPPoE request before forwarding it to the server.
	remote_id_source	R/W	The remote id identifies the client that requests a PPPoE connection.
	custom_remote_id	R/W	This field is only used in a PPPoE request when the remote_id_source is set to USER_DEFINED.
	circuit_id_source	R/W	This field defines how the port on which a PPPoE request comes in is identified.
pppoe_port_config[PORT].			This table permits port specific enable of the PPPoE Intermediate Agent feature.
	enable_pppoe_snooping	R/W	Enables PPPoE intermediate agent function also known as PPPoE Snooping for this port. Also observe the general enable parameter for PPPoE.
arp_inspection_port_config[PORT].			This table defines the parameter for Dynamic ARP Inspection per port. These features should generally be used with untrusted ports.

©2026 MICROSENS GmbH & Co. KG - Hamm/Germany - www.microsens.com

enable_arp_inspection	R/W	Generally enables Dynamic ARP Inspection. The details need to be configured per VLAN in separate table. This feature helps preventing from man-in-the-middle attacks to the network.
arp_rate_limiting	R/W	Defines how many ARP request are accepted per second. When the limit is reached, a DOS attack is assumed and the port is shut down. The value 0 disables the rate limit check.
inspection_database	R/W	When set to another value than NONE, the MAC-IP relationship of the incoming ARPs is verified against the selected table. This ensures that only valid MACs enter the network.
arp_acl_name	R/W	Name of the ACL (access control list) which declares which IP/MAC relations are acceptable. Note: ACLs are configured under Management.ACL. Several ACL may be specified with a comma separated list. Example acl1, otherlist
acl_default_logic	R/W	Defines which action is taken when none of the ACL records matches. Default is deny which blocks the ARP.
source_mac_validation	R/W	Checks the source MAC address in the Ethernet header against the sender MAC address in the ARP body. This check is performed on both ARP requests and responses. Packets with different MAC addresses are dropped.
dest_mac_validation	R/W	Checks the destination MAC address in the Ethernet header against the target MAC address in ARP body. This check is performed for ARP responses. Packets with different MAC addresses are dropped.
ip_range_validation	R/W	Checks ARP for invalid addresses. Invalid addresses include 0.0.0.0, 255.255.255.255, and all IP multicast and loopback addresses. Sender IP addresses are checked in all ARP requests and responses, and target IP addresses are checked only in ARP responses.

©2026 MICROSENS GmbH & Co. KG - Hamm/Germany - www.microsens.com

radius_controlled_dhcp.			This feature permits a local DHCP server per port which takes the IP data to serve via a RADIUS session from a common server. The Framed-IP-Address attribute is expected.
	enable_radius_dhcp	R/W	Generally enables RADIUS controlled DHCP server feature. Only ports are affected for which PACC is enabled and set to 802.1X or MAC_VIA_RADIUS controlled.
	lease_time	R/W	Lease time in seconds.
	default_subnet_mask	R/W	This subnet mask is used in the DHCP reply when the RADIUS attribute Framed-IP-Netmask is not received.
	gateway	R/W	This gateway IP address is used in the DHCP reply. The value is not received via RADIUS. When the field is left blank no gateway information is send.
	dns_server	R/W	This domain name server IP address is used in the DHCP reply. The value is not received via RADIUS. When the field is left blank no gateway information is send.
snooping_statistics[PORT].			Statistics indicating activity of DHCP snooping.
	trust_mode	R	Reflects the determined trust mode.
	number_of_dhcp_processed	R	Counts the number of DHCP messages processed.
	number_of_dhcp_dropped	R	Counts the number of DHCP messages dropped.
	last_drop_reason	R	
snooping_table[256].			This table lists the MAC-IP bindings of the untrusted ports (only) as discovered through DHCP snooping.
	mac	R	MAC address entry
	port	R	Port number for MAC address
	vlan	R	if non zero this MAC is part of this VLAN.
	dhcp_ip_v4	R	IP v4 address associated with this MAC.
	lease_time_v4	R	Lease time as reported by DHCP server
	dhcp_ip_v6	R	IP v6 address associated with this MAC obtained through DHCP.
	lease_time_v6	R	Lease time of the v6 ip as reported by DHCP server
	slaac_ip_v6	R	Link-Local IP address associated with this MAC.
	last_updated	R	Time stamp when this record was written

©2026 MICROSENS GmbH & Co. KG - Hamm/Germany - www.microsens.com

	last_updated_epoch	R	Time stamp in alternate format

©2026 MICROSENS GmbH & Co. KG - Hamm/Germany - www.microsens.com

32.4 DHCP Configuration Parameters

Group **Path**	**General Parameters** Protocol.DHCP
enable_dhcp_relay	General enable of DHCP relay function. **Values** enabled, disabled **OID** 1.3.6.1.4.1.3181.10.6.2.49.1 (dhcpEnableDhcpRelay)
enable_dhcp_snooping	General enable of DHCP snooping function. **Values** enabled, disabled **OID** 1.3.6.1.4.1.3181.10.6.2.49.2 (dhcpEnableDhcpSnooping)
enable_dhcp_server	General enable of DHCP server function. **Values** enabled, disabled **OID** 1.3.6.1.4.1.3181.10.6.2.49.3 (dhcpEnableDhcpServer)
enable_pppoe_snooping	General enable of PPPoE snooping also known as PPPoE Intermediate Agent function. **Values** enabled, disabled **OID** 1.3.6.1.4.1.3181.10.6.2.49.4 (dhcpEnablePppoeSnooping)
enable_arp_inspection	General enable of ARP inspection function. **Values** enabled, disabled **OID** 1.3.6.1.4.1.3181.10.6.2.49.5 (dhcpEnableArpInspection)
unblock_port	This function may be used to unblock a port that has been set to blocking state due to DHCP flooding or due to ARP storm detection. The shorthand port format like 1 for 1/1 may be used. Syntax examples: dhcp.unblock_port = 1/2,1/5 or dhcp.unblock_port = 1/1-1/4. Also the syntax .. = 0-5 to unblock the first 6 ports is supported. **Action** Excecute command with parameter string max. 32 characters. **OID** 1.3.6.1.4.1.3181.10.6.2.49.6 (dhcpUnblockPort)
clear_snooping_table	This function may be used to clear the content of the DHCP snooping table. **Action** Excecute command. **OID** 1.3.6.1.4.1.3181.10.6.2.49.7 (dhcpClearSnoopingTable)

©2026 MICROSENS GmbH & Co. KG - Hamm/Germany - www.microsens.com

Group	**relay_port_config**, for all ports[0..31]
Path	Protocol.DHCP.relay_port_config[port]
Description	This configures the DHCP relay option 82. It can be used to supply information from which port a DHCP request came in order to supply an IP based on the physical location of the requestor.

enable_dhcp_relay	When enabled incoming DHCP requests are redirected to the DHCP server or network specified in 'dhcp.relay_config'	
	Values	enabled, disabled
	OID	1.3.6.1.4.1.3181.10.6.2.49.9.1.2 (relayPortConfigEnableDhcpRelay)
enable_option_82	When enabled incoming DHCP requests are modified in 'dhcp.relay_config'	
	Values	enabled, disabled
	OID	1.3.6.1.4.1.3181.10.6.2.49.9.1.3 (relayPortConfigEnableOption82)

Group	**snooping_port_config**, for all ports[0..31]
Path	Protocol.DHCP.snooping_port_config[port]
Description	This configures the DHCP snooping function. DHCP snooping acts like a DHCP firewall between access and link ports. When enabled it ensures that for untrusted ports only DHCP requests are accepted. This prevents malicious users from injecting fake DHCP frames and thus invalid IP addresses.

enable_dhcp_snooping	This enables the DHCP snooping function per port.		
	Values	enabled, disabled	
	OID	1.3.6.1.4.1.3181.10.6.2.49.11.1.2 (snoopingPortConfigEnableDhcpSnooping)	
dhcp_filtering	DHCP filtering prevents DHCP responses being injected from a local access port. It acts like a DHCP firewall between access and link ports.		
	Values	*DISABLED*	DHCP frames are not removed
		DROP_AND_EVENT	DHCP response frames incoming from a user port are removed and a PACKET_INTERCEPTED event is send
		BLOCK_AND_EVENT	Port is blocked when an DHCP response incoming from a user port is detected. Needs operator intervention to unblock. Also a PACKET_INTERCEPTED event is send.
	OID	1.3.6.1.4.1.3181.10.6.2.49.11.1.3 (snoopingPortConfigDhcpFiltering)	

©2026 MICROSENS GmbH & Co. KG - Hamm/Germany - www.microsens.com

snooping_trust	DHCP responses are only accepted when they ingress on a trusted port. Typically these are the link ports. AUTO uses the port role and declares all up or downlink ports as trusted. **Values** *AUTO* Use port role and declares link port as trusted *UNTRUSTED* This port is untrusted and DHCP filtering applies *TRUSTED* This port is trusted and no filtering occurs. Use when a DHCP server should be permitted on a local access port **OID** 1.3.6.1.4.1.3181.10.6.2.49.11.1.4 (snoopingPortConfigSnoopingTrust)
accept_ingress_option82	Normally incoming DHCP request incoming with Option 82 set will be discarded. When enabled then this check is ignored. **Values** enabled, disabled **OID** 1.3.6.1.4.1.3181.10.6.2.49.11.1.5 (snoopingPortConfigAcceptIngressOption82)
mac_address_verification	When a packet is received on an untrusted interface, and the source MAC address and the DHCP client MAC address do not match and this feature is enabled, the packet is dropped. **Values** enabled, disabled **OID** 1.3.6.1.4.1.3181.10.6.2.49.11.1.6 (snoopingPortConfigMacAddressVerification)
dhcp_rate_limiting	Defines how many DHCP request are accepted per second. When the limit is reached, DHCP flooding is assumed and the port is blocked. The value 0 disables the rate limit check. **Value** Number in range 0-50 **OID** 1.3.6.1.4.1.3181.10.6.2.49.11.1.7 (snoopingPortConfigDhcpRateLimiting)
clear_snooping_statistics	Reset all DHCP related statistics and reason. The snooping binding table is not affected. **Action** Excecute command. **OID** 1.3.6.1.4.1.3181.10.6.2.49.11.1.8 (snoopingPortConfigClearSnoopingStatistics)

Group	**pppoe_port_config**, for all ports[0..31]
Path	Protocol.DHCP.pppoe_port_config[port]
Description	This table permits port specific enable of the PPPoE Intermediate Agent feature.

©2026 MICROSENS GmbH & Co. KG - Hamm/Germany - www.microsens.com

enable_pppoe_snooping	Enables PPPoE intermediate agent function also known as PPPoE Snooping for this port. Also observe the general enable parameter for PPPoE. **Values** enabled, disabled **OID** 1.3.6.1.4.1.3181.10.6.2.49.13.1.2 (pppoePortConfigEnablePppoeSnooping)

Group	**arp_inspection_port_config**, for all ports[0..31]
Path	Protocol.DHCP.arp_inspection_port_config[port]
Description	This table defines the parameter for Dynamic ARP Inspection per port. These features should generally be used with untrusted ports.

enable_arp_inspection	Generally enables Dynamic ARP Inspection. The details need to be configured per VLAN in separate table. This feature helps preventing from man-in-the-middle attacks to the network. **Values** enabled, disabled **OID** 1.3.6.1.4.1.3181.10.6.2.49.14.1.2 (arpInspectionPortConfigEnableArpInspection)
arp_rate_limiting	Defines how many ARP request are accepted per second. When the limit is reached, a DOS attack is assumed and the port is shut down. The value 0 disables the rate limit check. **Value** Number in range 0-50 **OID** 1.3.6.1.4.1.3181.10.6.2.49.14.1.3 (arpInspectionPortConfigArpRateLimiting)
inspection_database	When set to another value than NONE, the MAC-IP relationship of the incoming ARPs is verified against the selected table. This ensures that only valid MACs enter the network. **Values** *NONE* Only general ARP validity is checked *DHCP* The DHCP snooping table is used to verify MAC-IP relationship *ARP_ACL* The manually defined ARP access control list table is used to verify MAC-IP relationship *BOTH* The ARP is only rejected when both tables fail to verify MAC-IP relationship **OID** 1.3.6.1.4.1.3181.10.6.2.49.14.1.4 (arpInspectionPortConfigInspectionDatabase)
arp_acl_name	Name of the ACL (access control list) which declares which IP/MAC relations are acceptable. Note: ACLs are configured under Management.ACL. Several ACL may be specified with a comma separated list. Example acl1, otherlist **Value** String, max. 128 characters. **OID** 1.3.6.1.4.1.3181.10.6.2.49.14.1.5 (arpInspectionPortConfigArpAclName)

©2026 MICROSENS GmbH & Co. KG - Hamm/Germany - www.microsens.com

acl_default_logic	Defines which action is taken when none of the ACL records matches. Default is deny which blocks the ARP. **Values** *DENY* When no entry matches the ACL then the ARP is denied *PERMIT* When no entry matches the ACL then the ARP is accepted. **OID** 1.3.6.1.4.1.3181.10.6.2.49.14.1.6 (arpInspectionPortConfigAclDefaultLogic)
source_mac_validation	Checks the source MAC address in the Ethernet header against the sender MAC address in the ARP body. This check is performed on both ARP requests and responses. Packets with different MAC addresses are dropped. **Values** enabled, disabled **OID** 1.3.6.1.4.1.3181.10.6.2.49.14.1.7 (arpInspectionPortConfigSourceMacValidation)
dest_mac_validation	Checks the destination MAC address in the Ethernet header against the target MAC address in ARP body. This check is performed for ARP responses. Packets with different MAC addresses are dropped. **Values** enabled, disabled **OID** 1.3.6.1.4.1.3181.10.6.2.49.14.1.8 (arpInspectionPortConfigDestMacValidation)
ip_range_validation	Checks ARP for invalid addresses. Invalid addresses include 0.0.0.0, 255.255.255.255, and all IP multicast and loopback addresses. Sender IP addresses are checked in all ARP requests and responses, and target IP addresses are checked only in ARP responses. **Values** enabled, disabled **OID** 1.3.6.1.4.1.3181.10.6.2.49.14.1.9 (arpInspectionPortConfigIpRangeValidation)

Group	**relay_config**
Path	Protocol.DHCP.relay_config
Description	This configures the DHCP relay option 82. It can be used to supply information from which port a DHCP request came in order to supply an IP based on the physical location of the requestor.

dhcp_server_address	Defines host address or network address where the DHCP server(s) resides. Also known as ip_helper_address. **Value** String, max. 128 characters. **OID** 1.3.6.1.4.1.3181.10.6.2.49.8.1.2 (relayConfigDhcpServerAddress)

©2026 MICROSENS GmbH & Co. KG - Hamm/Germany - www.microsens.com

remote_id_source	Defines how the switch is identified when DHCP option 82 is used. (Suboption2)		
	Values	*HOSTNAME*	Hostname of this switch
		MAC_ADDRESS	MAC address of this switch
		SYS_NAME	SNMP sysName of this switch
		USER_DEFINED	A user defined string as defined in 'custom_remote_id' is used
		PORT_ALIAS	The 'port.config.alias' value of the incoming port is used
	OID	1.3.6.1.4.1.3181.10.6.2.49.8.1.3 (relayConfigRemoteIdSource)	
custom_remote_id	This remote id is used for option 82 when 'remote_id_source' is set to USER_DEFINED.		
	Value	String, max. 128 characters.	
	OID	1.3.6.1.4.1.3181.10.6.2.49.8.1.4 (relayConfigCustomRemoteId)	
circuit_id_source	Defines how the ports are identified when option 82 is used. (Suboption1)		
	Values	*SNMP_PORT_ID*	Port id in 101,102 style as used with SNMP
		SLOT_PORT_ID	Port id in slot/port style
		PORT_ALIAS	The 'port.config.alias' value of the incoming port is used
		IP_SLOT_PORT_VLAN	(Agent-IP) eth (Slot/Port):(VLAN-ID) is used
	OID	1.3.6.1.4.1.3181.10.6.2.49.8.1.5 (relayConfigCircuitIdSource)	

Group	**server_config**
Path	Protocol.DHCP.server_config
Description	This configures the DHCP server. Most configuration data are taken from the IP and IP.ip_v4_config table including domain name, gateway and subnet mask. The DHCP server functionality is limited to the Management VLAN.

start_ip_address	This defines the lowest IP address which is served. Make sure that the configured static IP of this device is reachable from this address.	
	Format	IPv4 Address *ddd.ddd.ddd.ddd* (*ddd* = decimal number between 000 to 255)
	OID	1.3.6.1.4.1.3181.10.6.2.49.10.1.2 (serverConfigStartIpAddress)

©2026 MICROSENS GmbH & Co. KG - Hamm/Germany - www.microsens.com

end_ip_address	This defines the highest IP address which is served. Make sure that the configured static IP of this device is reachable from this address. **Format** IPv4 Address *ddd.ddd.ddd.ddd* (*ddd* = decimal number between 000 to 255) **OID** 1.3.6.1.4.1.3181.10.6.2.49.10.1.3 (serverConfigEndIpAddress)
lease_time	DHCP lease time in seconds. When a device is no longer active for the defined time, its address is released. When a device reconnects the previous IP is served if possible. **Value** Number in range 0-0xFFFFFFFF **OID** 1.3.6.1.4.1.3181.10.6.2.49.10.1.4 (serverConfigLeaseTime)
show_leases	This action can be used to display the assigned MAC - IP relations **Action** Excecute command. **OID** 1.3.6.1.4.1.3181.10.6.2.49.10.1.5 (serverConfigShowLeases)

Group	**pppoe_config**
Path	Protocol.DHCP.pppoe_config
Description	This table defines the general parameter for PPPoE Intermediate Agent feature.

vendor_id	Vendor identification that this device adds to a PPPoE request before forwarding it to the server. **Value** Number in range 0-0xFFFFFFFF **OID** 1.3.6.1.4.1.3181.10.6.2.49.12.1.2 (pppoeConfigVendorId)
remote_id_source	The remote id identifies the client that requests a PPPoE connection. **Values** *HOSTNAME* Hostname of this switch *MAC_ADDRESS* MAC address of this switch *SYS_NAME* SNMP sysName of this switch *USER_DEFINED* A user defined string as defined in 'custom_remote_id' is used *PORT_ALIAS* The 'port.config.alias' value of the incoming port is used **OID** 1.3.6.1.4.1.3181.10.6.2.49.12.1.3 (pppoeConfigRemoteIdSource)
custom_remote_id	This field is only used in a PPPoE request when the remote_id_source is set to USER_DEFINED. **Value** String, max. 63 characters. **OID** 1.3.6.1.4.1.3181.10.6.2.49.12.1.4 (pppoeConfigCustomRemoteId)

©2026 MICROSENS GmbH & Co. KG - Hamm/Germany - www.microsens.com

circuit_id_source	This field defines how the port on which a PPPoE request comes in is identified.		
	Values	*SNMP_PORT_ID*	Port id in 101,102 style as used with SNMP
		SLOT_PORT_ID	Port id in slot/port style
		PORT_ALIAS	The 'port.config.alias' value of the incoming port is used
		IP_SLOT_PORT_VLAN	(Agent-IP) eth (Slot/Port):(VLAN-ID) is used
	OID	1.3.6.1.4.1.3181.10.6.2.49.12.1.5 (pppoeConfigCircuitIdSource)	

Group	**radius_controlled_dhcp**
Path	Protocol.DHCP.radius_controlled_dhcp
Description	This feature permits a local DHCP server per port which takes the IP data to serve via a RADIUS session from a common server. The Framed-IP-Address attribute is expected.

enable_radius_dhcp	Generally enables RADIUS controlled DHCP server feature. Only ports are affected for which PACC is enabled and set to 802.1X or MAC_VIA_RADIUS controlled.	
	Values	enabled, disabled
	OID	1.3.6.1.4.1.3181.10.6.2.49.15.1.2 (radiusControlledDhcpEnableRadiusDhcp)
lease_time	Lease time in seconds.	
	Value	Number in range 0-0xFFFFFFFF
	OID	1.3.6.1.4.1.3181.10.6.2.49.15.1.3 (radiusControlledDhcpLeaseTime)
default_subnet_mask	This subnet mask is used in the DHCP reply when the RADIUS attribute Framed-IP-Netmask is not received.	
	Format	IPv4 Address *ddd.ddd.ddd.ddd* (*ddd* = decimal number between 000 to 255)
	OID	1.3.6.1.4.1.3181.10.6.2.49.15.1.4 (radiusControlledDhcpDefaultSubnetMask)
gateway	This gateway IP address is used in the DHCP reply. The value is not received via RADIUS. When the field is left blank no gateway information is send.	
	Format	IPv4 Address *ddd.ddd.ddd.ddd* (*ddd* = decimal number between 000 to 255)
	OID	1.3.6.1.4.1.3181.10.6.2.49.15.1.5 (radiusControlledDhcpGateway)

©2026 MICROSENS GmbH & Co. KG - Hamm/Germany - www.microsens.com

dns_server	This domain name server IP address is used in the DHCP reply. The value is not received via RADIUS. When the field is left blank no gateway information is send.
Format	IPv4 Address *ddd.ddd.ddd.ddd* (*ddd* = decimal number between 000 to 255)
OID	1.3.6.1.4.1.3181.10.6.2.49.15.1.6 (radiusControlledDhcpDnsServer)

©2026 MICROSENS GmbH & Co. KG - Hamm/Germany - www.microsens.com

32.5 DHCP Status Parameters

Group	**snooping_statistics**, for all ports[0..31]
Path	Protocol.DHCP.snooping_statistics[port]
Description	Statistics indicating activity of DHCP snooping.

trust_mode

Reflects the determined trust mode.

Values

UNDECIDED	Value not yet determined
UNTRUSTED	This port is untrusted and DHCP filtering applies
TRUSTED	This port is trusted and no filtering occurs.

OID 1.3.6.1.4.1.3181.10.6.2.49.100.1.2 (snoopingStatisticsTrustMode)

number_of_dhcp_processed

Counts the number of DHCP messages processed.

Value Number in range 0-0xFFFFFFFF

OID 1.3.6.1.4.1.3181.10.6.2.49.100.1.3 (snoopingStatisticsNumberOfDhcpProcessed)

number_of_dhcp_dropped

Counts the number of DHCP messages dropped.

Value Number in range 0-0xFFFFFFFF

OID 1.3.6.1.4.1.3181.10.6.2.49.100.1.4 (snoopingStatisticsNumberOfDhcpDropped)

last_drop_reason

Values

OK	
ILLEGAL_DHCP_SERVER	Forbidden DHCP message on untrusted port
DHCP_SERVER_SPOOFED	source MAC and DHCP client MAC did not match
ILLEGAL_RELAY_AGENT	
BINDING_MISMATCH	DHCPRELEASE or DHCPDECLINE interface information did not match the binding table information
FLOODING	Too many DHCP messages which appears to be an attack.

OID 1.3.6.1.4.1.3181.10.6.2.49.100.1.5 (snoopingStatisticsLastDropReason)

©2026 MICROSENS GmbH & Co. KG - Hamm/Germany - www.microsens.com

33 Link Layer Discovery Protocol (LLDP)

33.1 Key Features

LLDP reception

Receive LLDP information from neighboring devices per port. Display retrieved information via all NMS interfaces. This includes geographical coordinates and civic location information.

Permits building of network topology map.

LLDP transmission

Geographical coordinates and civic location information can be specified for transmission to neighboring devices.

Permit precise location of the device. This is important in large installations.

LLDP-MED

Media Endpoint Discovery for the auto-discovery of LAN policies. Support of VLAN advertising and PoE+ control.

Permits autoconfiguration of compliant VoIP telephones.

LLDP/CDP preference

Device will prefer standards based LLDP but will automatically accept CDP if present.

Eases integration in multi vendor networks

CDP operation

Support for Cisco Discovery Protocol CDP v1, v2 for automatic detection of capabilities of neighbor CDP enabled devices.

Permits building of network topology map in Cisco environment.

CDP Voice VLAN

Support of Voice VLAN for configuration of connected Cisco VoIP-phone.

Permits autoconfiguration of Cisco VoIP telephones.

33.2 Functional Description

33.2.1 LLDP

Link Layer Discovery Protocol (LLDP) is used to discover basic information about neighboring devices on the local broadcast domain. LLDP is a vendor-neutral Layer 2 protocol that uses periodic broadcasts to advertise information about the sending device. Advertised information is represented in Type Length Value (TLV) format according to the IEEE 802.1ab standard, and can include details such as device identification, capabilities and configuration settings. LLDP also defines how to store and maintain information gathered about the neighboring network nodes it discovers.

©2026 MICROSENS GmbH & Co. KG - Hamm/Germany - www.microsens.com

33.2.2 Basic Type Length Values (TVLs)

The following parameters are included in the LLDP information block:

Management Address

The management address protocol packet includes the IPv4 address of the switch.

Port Description

The port description is taken from the ifDescr object in RFC 2863, which includes information about the manufacturer, the product name, and the version of the interface hardware/software.

System Capabilities

The system capabilities identifies the primary function(s) of the system and whether or not these primary functions are enabled. The information advertised by this TLV is described in IEEE 802.1AB.

System Description

The system description is taken from the sysDescr object in RFC 3418, which includes the full name and version identification of the system's hardware type, software operating system, and networking software.

System Name

The system name is taken from the sysName object in RFC 3418, which contains the system's administratively assigned name.

33.2.3 IEEE 802.1 Organizationally Specific TLVs

VLAN ID

The port's default VLAN identifier (PVID) indicates the VLAN with which untagged or priority-tagged frames are associated

33.2.4 Media Endpoint Discovery(LLDP-MED)

Media Endpoint Discovery is an enhancement of LLDP, formally approved and published by the Telecommunications Industry Association (TIA), known as LLDP-MED. It provides the following capabilites:

- Auto-Discovery of LAN policies (such as VLAN, Layer 2 Priority and Differentiated Services (DiffServ) settings) enabling plug and play networking.
- Device location discovery to allow creation of location databases and, in the case of Voice over Internet Protocol (VoIP), Enhanced 911 services.
- Extended and automated power management of Power over Ethernet (PoE) end points.
- Inventory management, facilitating the administration of network devices including specific information like manufacturer, software and hardware versions, article and serial number.

©2026 MICROSENS GmbH & Co. KG - Hamm/Germany - www.microsens.com

33.3 LLDP CLI Command Reference

The following table lists all CLI commands applicable for this feature section. For each parameter, the access mode is given:

R = Read Only, R/W = Read/Write, X = Executable Action.

Please note that the effective access rights are dependent on the login level of the user.

Category	Group	Table	Parameter	Options	Access	Description
Protocol.						
	lldp.					Link Layer Discovery Protocol (LLDP)
		config.				General settings for LLDP (link layer discovery protocol). This protocol is used to identify the directly attached neighbor devices. This is useful to build a network topology. It is also used to identify voip telephones and to set them up.
			enable_lldp		R/W	This generally enables the link layer discovery protocol (LLDP).
			enable_cdp		R/W	This enables Cisco discovery protocol. Check cdp_version parameter to select CDP version.
			lldp_enabled_ports		R/W	This parameter permits port selective LLDP enabling. When empty all ports are enabled! Syntax: slot/port, slot/port or use hex value for quick setup. Example = 0x7 defines ports 1-3.
			receive_only		R/W	This enables receive only mode. LLDP will not send any frames. It will only listen to its neighbors.
			forward_to_link		R/W	This mode forwards all received LLDP packets to the uplink port. In combination with receive_only option enabled this unit keeps quiet and all LLDP handling should be taken care off by the upstream device.
			transparency		R/W	When enabled and lldp itself is portwise or globally disabled, then LLDP data from adjacent ports are passed transparently through the switch. When disabled and LLDP is disabled for the port or globally, then no LLDP data are being send out.
			advertized_med_class		R/W	Enables emission of LLDP-MED frames of a certain class.
			disable_med_inventory		R/W	Disable LLDP-MED inventory TLV transmission.
			disable_voice_vlan_tlv		R/W	Disable voice vlan indication TLV transmission.
			cdp_version		R/W	Determines which version CDP messages are used.

©2026 MICROSENS GmbH & Co. KG - Hamm/Germany - www.microsens.com

	voice_vlan_prio	R/W	Layer 2 priority used for voice vlan in voip application.
	voice_vlan_signal_prio	R/W	Layer 2 priority used for voice vlan signaling in voip application.
	voice_dscp	R/W	DiffServ codepoint (0-63) for voip application
	signaling_dscp	R/W	DiffServ codepoint (0-63) for voip signaling
	time_to_live	R/W	The time to live value defines the time for which the lldp transmitted details are valid and can be displayed in the status.
	tx_delay	R/W	Transmission delay in seconds between successive LLDP frame transmissions initiated by changes in the LLDP local configuration.
	msg_tx_interval	R/W	The interval at which LLDP frames are transmitted on behalf of this LLDP agent.
	force_lldp_transmission	R/W	Force to send LLDP packets even when there is no LLDP peer detected.
	lldp_response_preferred	R/W	When enabled LLDP responses takes precede over CDP protocol responses.
local_coordinates.			Detailed GPS information about the physical location of this device may be entered here.
	latitude	R/W	A value in degrees such as: 50,123
	lat_resolution	R/W	A value in bits. Higher value is more accurate.
	longitude	R/W	A value in degrees such as: 50,123
	long_resolution	R/W	A value in bits. Higher value is more accurate.
	altitude	R/W	A value in meters.
	alt_resolution	R/W	A value in bits. Higher value is more accurate.
	alt_type	R/W	Defines in which way the altitude is interpreted.
	datum	R/W	Name of the map the given coordinates are based upon.
local_civic_location.			Detailed address information about the physical location of this device may be entered here. These data are forwarded using the LLDP-MED protocol.
	country_code	R/W	Two-letter ISO 3166 country code in capital ASCII letters. Use DE for Germany, etc.
	language	R/W	ISO 639 language code used for presenting the address information.
	national_subdivision	R/W	National subdivision: state, canton, region, province, or prefecture. Example: Hessen

©2026 MICROSENS GmbH & Co. KG - Hamm/Germany - www.microsens.com

	county	R/W	County / parish / district. Example: Landkreis Darmstadt
	town	R/W	City / township. Example: Frankfurt
	district	R/W	City district / division / borough / ward.
	block	R/W	Neighborhood / block.
	street	R/W	Name of the street without house number.
	leading_street_direction	R/W	Use any of these values or leave blank: N,E,W,S,NE,NW,SE,SW.
	trailing_street_suffix	R/W	Use any of these values or leave blank: N,E,W,S,NE,NW,SE,SW.
	street_suffix	R/W	Street suffix such as place or avenue.
	house_number	R/W	House number without a possible suffix.
	house_number_suffix	R/W	A modifier to the house number. It does not include parts of the house number. Example: a
	landmark	R/W	Landmark or vanity address for easier reference. Example: Airport Frankfurt
	additional_info	R/W	Additional location information without specified format.
	name	R/W	Identifies the person or organization associated with the address. Example: Sunshine Airline Office
	zip_code	R/W	Postal zip code for the address.
	building	R/W	The name of the building if this exists. Example: Terminal Building East
	unit	R/W	Unit / apartment / suite.
	floor	R/W	Floor value. Example: 1 for first floor
	room	R/W	Room number or name.
	place_type	R/W	Place type. Example: Office
	script	R/W	The script (from ISO 15924 [14]) used to encode the address information. Default: Latn
	elin_number	R/W	Emergency Call Services (ECS) Emergency Location Identification Number (ELIN).
received_overview[PORT].			This table contains received information about the attached device on each local port.
	sys_name	R	System name.
	sys_desc	R	System description.
	chassis_subtype	R	Type of chassis id.
	chassis_id	R	Chassis id of received frame.
	capabilities_supported	R	LLDP capabilities supported.
	capabilities_enabled	R	LLDP capabilities enabled.
	med_capabilities	R	LLDP_MED capabilities.
	port_subtype	R	Type of port id.

©2026 MICROSENS GmbH & Co. KG - Hamm/Germany - www.microsens.com

	port_identification	R	Port id.
	port_description	R	Port description.
	port_vlan	R	Port vlan identifier. Related to port_default_vlan_id.
received_remote_mgmt[32].			This table contains received management addresses of the remote system connected to a given local port. Some devices may offer several interfaces in parallel.
	local_port	R	Lists all ports that connect to this remote management interface
	mgmt_address	R	Remote management (ip) address
	mgmt_subtype	R	1=IPv4, 2=IPv6, other according to IANA Address Family Numbers
	mgmt_if_id	R	Management interface id.
	mgmt_if_subtype	R	Management interface subtype.
	mgmt_oid	R	Management start OID for SNMP access.
received_coordinates[PORT].			Detailed GPS information about the physical location of the attached device for each port are visible here if provided through the LLDP-MED protocol.
	latitude	R	A value in degrees such as: 50,123
	lat_resolution	R	A value in bits. Higher value is more accurate.
	longitude	R	A value in degrees such as: 50,123
	long_resolution	R	A value in bits. Higher value is more accurate.
	altitude	R	A value in meters or the floor level depending on definition.
	alt_resolution	R	A value in bits. Higher value is more accurate.
	alt_unit	R	Defines in which way the altitude is interpreted.
	datum	R	Name of the map the given coordinates are based upon.
received_civic_locations[PORT].			Detailed address information about the physical location of the attached device for each port are visible here if provided through the LLDP-MED protocol.
	country_code	R	Two-letter ISO 3166 country code in capital ASCII letters. Use DE for Germany, etc.
	language	R	ISO 639 language code used for presenting the address information.
	national_subdivision	R	National subdivision: state, canton, region, province, or prefecture. Example: Hessen.
	county	R	County / parish / district. Example: Landkreis Darmstadt
	town	R	City / township. Example: Frankfurt

©2026 MICROSENS GmbH & Co. KG - Hamm/Germany - www.microsens.com

	district	R	City district / division / borough / ward.
	block	R	Neighborhood / block.
	street	R	Name of the street without house number.
	leading_street_direction	R	Use any of these values or leave blank: N,E,W,S,NE,NW,SE,SW.
	trailing_street_suffix	R	Use any of these values or leave blank: N,E,W,S,NE,NW,SE,SW.
	street_suffix	R	Street suffix such as place or avenue.
	house_number	R	House number without a possible suffix.
	house_number_suffix	R	A modifier to the house number. It does not include parts of the house number. Example: a
	landmark	R	Landmark or vanity address for easier reference. Example: Airport Frankfurt
	additional_info	R	Additional location information without specified format.
	name	R	Identifies the person or organization associated with the address. Example: Sunshine Airline Office
	zip_code	R	Postal zip code for the address.
	building	R	The name of the building if this exists. Example: Terminal Building East
	unit	R	Unit / apartment / suite.
	floor	R	Floor value. Example: 1 for first floor.
	room	R	Room number or name.
	place_type	R	Place type. Example: Office.
	script	R	The script (from ISO 15924 [14]) used to encode the address information. Default: Latn
	elin_number	R	Emergency Call Services (ECS) Emergency Location Identification Number (ELIN).
received_policies[PORT].			Detailed information about the attached applications.
	application_type	R	Valid application types.
	policy_defined	R	False indicates policy is unknown. True indicates policy is defined.
	tagged_vlan	R	When set VLAN tagging is used.
	vlan_id	R	0 - only the priority level is significant. / IEEE 802.1q VLAN ID (VID) value. Related to voice vlan.
	layer_2_priority	R	IEEE 802.1d / IEEE 802.1p Layer 2 Priority.
	dscp	R	DiffServ/Differentiated Services Code Point (DSCP) value as defined in IETF RFC 2474 for the specified application type.

©2026 MICROSENS GmbH & Co. KG - Hamm/Germany - www.microsens.com

received_inventory_infos[PORT].			This table lists general inventory data of the attached equipment.
	hardware_revision	R	Hardware version
	firmware_revision	R	Firmware version
	software_revision	R	Software version
	serial_number	R	Serial number
	manufacturer	R	Manufacturer name
	model_name	R	Vendor-specific model name
	asset_id	R	Vendor-specific asset tracking identifier
received_poe_infos[PORT].			Detailed PoE information about the attached applications.
	type	R	Type of PoE equipment.
	source	R	Describes the power source.
	priority	R	Indicates priority of this device.
	value	R	Indicates the power available from the PSE via this port expressed in units of 0.1 watts on the remote device.
received_poe_control[PORT].			
	type	R	Indicates device type.
	poe_power_supported	R	Indicates if PoE is supported by the interface.
	poe_power_enabled	R	Indicates if PoE is enabled for this interface.
	pair_control	R	Indicates if the pair selection can be controlled on the given port
	power_pairs	R	Indicates which pins of the plug are used for power.
	power_class	R	Required PoE class.
	device_type	R	Type of PoE equipment.
	source	R	Indicates the power source.
	priority	R	Priority of the attached port.
	pd_requested_power	R	PD requested power value in multiple of 0.1W
	pse_allocated_power	R	PSE allocated power value in multiple of 0.1W

©2026 MICROSENS GmbH & Co. KG - Hamm/Germany - www.microsens.com

33.4 LLDP Configuration Parameters

Group	**config**
Path	Protocol.LLDP.config
Description	General settings for LLDP (link layer discovery protocol). This protocol is used to identify the directly attached neighbor devices. This is useful to build a network topology. It is also used to identify voip telephones and to set them up.
enable_lldp	This generally enables the link layer discovery protocol (LLDP). **Values** enabled, disabled **OID** 1.3.6.1.4.1.3181.10.6.2.43.1.1.2 (configEnableLldp)
enable_cdp	This enables Cisco discovery protocol. Check cdp_version parameter to select CDP version. **Values** enabled, disabled **OID** 1.3.6.1.4.1.3181.10.6.2.43.1.1.3 (configEnableCdp)
lldp_enabled_ports	This parameter permits port selective LLDP enabling. When empty all ports are enabled! Syntax: slot/port, slot/port or use hex value for quick setup. Example = 0x7 defines ports 1-3. **Value** PORTMASK0-0xFFFFFFFF **OID** 1.3.6.1.4.1.3181.10.6.2.43.1.1.4 (configLldpEnabledPorts)
receive_only	This enables receive only mode. LLDP will not send any frames. It will only listen to its neighbors. **Values** enabled, disabled **OID** 1.3.6.1.4.1.3181.10.6.2.43.1.1.5 (configReceiveOnly)
forward_to_link	This mode forwards all received LLDP packets to the uplink port. In combination with receive_only option enabled this unit keeps quiet and all LLDP handling should be taken care off by the upstream device. **Values** enabled, disabled **OID** 1.3.6.1.4.1.3181.10.6.2.43.1.1.6 (configForwardToLink)
transparency	When enabled and lldp itself is portwise or globally disabled, then LLDP data from adjacent ports are passed transparently through the switch. When disabled and LLDP is disabled for the port or globally, then no LLDP data are being send out. **Values** enabled, disabled **OID** 1.3.6.1.4.1.3181.10.6.2.43.1.1.7 (configTransparency)

©2026 MICROSENS GmbH & Co. KG - Hamm/Germany - www.microsens.com

advertized_med_class	Enables emission of LLDP-MED frames of a certain class.		
	Values	*DISABLE_MED*	Disables MED class
		GENERIC_ENDPOINT	Enables generic_endpoint
		MEDIA_ENDPOINT	Enables media_endpoint
		COMMUNICATION_ENDPOINT	Enables communication_endpoint
		NETWORK_DEVICE	Enables networkconnectivity_device
	OID	1.3.6.1.4.1.3181.10.6.2.43.1.1.8 (configAdvertizedMedClass)	
disable_med_inventory	Disable LLDP-MED inventory TLV transmission.		
	Values	enabled, disabled	
	OID	1.3.6.1.4.1.3181.10.6.2.43.1.1.9 (configDisableMedInventory)	
disable_voice_vlan_tlv	Disable voice vlan indication TLV transmission.		
	Values	enabled, disabled	
	OID	1.3.6.1.4.1.3181.10.6.2.43.1.1.10 (configDisableVoiceVlanTlv)	
cdp_version	Determines which version CDP messages are used.		
	Values	*V1_AND_V2*	Usually both version may coexist
		V1	Use only version 1
		V2	Use only version 2
	OID	1.3.6.1.4.1.3181.10.6.2.43.1.1.11 (configCdpVersion)	
voice_vlan_prio	Layer 2 priority used for voice vlan in voip application.		
	Value	Number in range 0-7	
	OID	1.3.6.1.4.1.3181.10.6.2.43.1.1.12 (configVoiceVlanPrio)	
voice_vlan_signal_prio	Layer 2 priority used for voice vlan signaling in voip application.		
	Value	Number in range 0-7	
	OID	1.3.6.1.4.1.3181.10.6.2.43.1.1.13 (configVoiceVlanSignalPrio)	
voice_dscp	DiffServ codepoint (0-63) for voip application		
	Value	Number in range 0-63	
	OID	1.3.6.1.4.1.3181.10.6.2.43.1.1.14 (configVoiceDscp)	
signaling_dscp	DiffServ codepoint (0-63) for voip signaling		
	Value	Number in range 0-63	
	OID	1.3.6.1.4.1.3181.10.6.2.43.1.1.15 (configSignalingDscp)	
time_to_live	The time to live value defines the time for which the lldp transmitted details are valid and can be displayed in the status.		
	Value	Number in range 0-255	
	OID	1.3.6.1.4.1.3181.10.6.2.43.1.1.16 (configTimeToLive)	

©2026 MICROSENS GmbH & Co. KG - Hamm/Germany - www.microsens.com

tx_delay	Transmission delay in seconds between successive LLDP frame transmissions initiated by changes in the LLDP local configuration. **Value** Number in range 1-250 **OID** 1.3.6.1.4.1.3181.10.6.2.43.1.1.17 (configTxDelay) 1.0.8802.1.1.2.1.1.4 (lldpTxDelay)
msg_tx_interval	The interval at which LLDP frames are transmitted on behalf of this LLDP agent. **Value** Number in range 5-32767 **OID** 1.3.6.1.4.1.3181.10.6.2.43.1.1.18 (configMsgTxInterval) 1.0.8802.1.1.2.1.1.1 (lldpMessageTxInterval)
force_lldp_transmission	Force to send LLDP packets even when there is no LLDP peer detected. **Values** enabled, disabled **OID** 1.3.6.1.4.1.3181.10.6.2.43.1.1.19 (configForceLldpTransmission)
lldp_response_preferred	When enabled LLDP responses takes precede over CDP protocol responses. **Values** enabled, disabled **OID** 1.3.6.1.4.1.3181.10.6.2.43.1.1.20 (configLldpResponsePreferred)

Group	**local_coordinates**
Path	Protocol.LLDP.local_coordinates
Description	Detailed GPS information about the physical location of this device may be entered here.
latitude	A value in degrees such as: 50,123 **Value** String, max. 16 characters. **OID** 1.3.6.1.4.1.3181.10.6.2.43.2.1.2 (localCoordinatesLatitude)
lat_resolution	A value in bits. Higher value is more accurate. **Value** Number in range 0-34 **OID** 1.3.6.1.4.1.3181.10.6.2.43.2.1.3 (localCoordinatesLatResolution)
longitude	A value in degrees such as: 50,123 **Value** String, max. 16 characters. **OID** 1.3.6.1.4.1.3181.10.6.2.43.2.1.4 (localCoordinatesLongitude)
long_resolution	A value in bits. Higher value is more accurate. **Value** Number in range 0-34 **OID** 1.3.6.1.4.1.3181.10.6.2.43.2.1.5 (localCoordinatesLongResolution)

©2026 MICROSENS GmbH & Co. KG - Hamm/Germany - www.microsens.com

altitude	A value in meters.	
	Value	String, max. 16 characters.
	OID	1.3.6.1.4.1.3181.10.6.2.43.2.1.6 (localCoordinatesAltitude)
alt_resolution	A value in bits. Higher value is more accurate.	
	Value	Number in range 0-30
	OID	1.3.6.1.4.1.3181.10.6.2.43.2.1.7 (localCoordinatesAltResolution)
alt_type	Defines in which way the altitude is interpreted.	
	Values	*METER* *FLOOR*
	OID	1.3.6.1.4.1.3181.10.6.2.43.2.1.8 (localCoordinatesAltType)
datum	Name of the map the given coordinates are based upon.	
	Value	String, max. 16 characters.
	OID	1.3.6.1.4.1.3181.10.6.2.43.2.1.9 (localCoordinatesDatum)

Group	**local_civic_location**
Path	Protocol.LLDP.local_civic_location
Description	Detailed address information about the physical location of this device may be entered here. These data are forwarded using the LLDP-MED protocol.

country_code	Two-letter ISO 3166 country code in capital ASCII letters. Use DE for Germany, etc.	
	Value	String, max. 4 characters.
	OID	1.3.6.1.4.1.3181.10.6.2.43.3.1.2 (localCivicLocationCountryCode)
language	ISO 639 language code used for presenting the address information.	
	Value	String, max. 8 characters.
	OID	1.3.6.1.4.1.3181.10.6.2.43.3.1.3 (localCivicLocationLanguage)
national_subdivision	National subdivision: state, canton, region, province, or prefecture. Example: Hessen	
	Value	String, max. 16 characters.
	OID	1.3.6.1.4.1.3181.10.6.2.43.3.1.4 (localCivicLocationNationalSubdivision)

©2026 MICROSENS GmbH & Co. KG - Hamm/Germany - www.microsens.com

county	County / parish / district. Example: Landkreis Darmstadt **Value** String, max. 32 characters. **OID** 1.3.6.1.4.1.3181.10.6.2.43.3.1.5 (localCivicLocationCounty)
town	City / township. Example: Frankfurt **Value** String, max. 32 characters. **OID** 1.3.6.1.4.1.3181.10.6.2.43.3.1.6 (localCivicLocationTown)
district	City district / division / borough / ward. **Value** String, max. 32 characters. **OID** 1.3.6.1.4.1.3181.10.6.2.43.3.1.7 (localCivicLocationDistrict)
block	Neighborhood / block. **Value** String, max. 16 characters. **OID** 1.3.6.1.4.1.3181.10.6.2.43.3.1.8 (localCivicLocationBlock)
street	Name of the street without house number. **Value** String, max. 32 characters. **OID** 1.3.6.1.4.1.3181.10.6.2.43.3.1.9 (localCivicLocationStreet)
leading_street_direction	Use any of these values or leave blank: N,E,W,S,NE,NW,SE,SW. **Value** String, max. 4 characters. **OID** 1.3.6.1.4.1.3181.10.6.2.43.3.1.10 (localCivicLocationLeadingStreetDirection)
trailing_street_suffix	Use any of these values or leave blank: N,E,W,S,NE,NW,SE,SW. **Value** String, max. 4 characters. **OID** 1.3.6.1.4.1.3181.10.6.2.43.3.1.11 (localCivicLocationTrailingStreetSuffix)
street_suffix	Street suffix such as place or avenue. **Value** String, max. 8 characters. **OID** 1.3.6.1.4.1.3181.10.6.2.43.3.1.12 (localCivicLocationStreetSuffix)
house_number	House number without a possible suffix. **Value** String, max. 8 characters. **OID** 1.3.6.1.4.1.3181.10.6.2.43.3.1.13 (localCivicLocationHouseNumber)

©2026 MICROSENS GmbH & Co. KG - Hamm/Germany - www.microsens.com

house_number_suffix	A modifier to the house number. It does not include parts of the house number. Example: a **Value** String, max. 8 characters. **OID** 1.3.6.1.4.1.3181.10.6.2.43.3.1.14 (localCivicLocationHouseNumberSuffix)
landmark	Landmark or vanity address for easier reference. Example: Airport Frankfurt **Value** String, max. 128 characters. **OID** 1.3.6.1.4.1.3181.10.6.2.43.3.1.15 (localCivicLocationLandmark)
additional_info	Additional location information without specified format. **Value** String, max. 128 characters. **OID** 1.3.6.1.4.1.3181.10.6.2.43.3.1.16 (localCivicLocationAdditionalInfo)
name	Identifies the person or organization associated with the address. Example: Sunshine Airline Office **Value** String, max. 128 characters. **OID** 1.3.6.1.4.1.3181.10.6.2.43.3.1.17 (localCivicLocationName)
zip_code	Postal zip code for the address. **Value** String, max. 16 characters. **OID** 1.3.6.1.4.1.3181.10.6.2.43.3.1.18 (localCivicLocationZipCode)
building	The name of the building if this exists. Example: Terminal Building East **Value** String, max. 128 characters. **OID** 1.3.6.1.4.1.3181.10.6.2.43.3.1.19 (localCivicLocationBuilding)
unit	Unit / apartment / suite. **Value** String, max. 32 characters. **OID** 1.3.6.1.4.1.3181.10.6.2.43.3.1.20 (localCivicLocationUnit)
floor	Floor value. Example: 1 for first floor **Value** String, max. 8 characters. **OID** 1.3.6.1.4.1.3181.10.6.2.43.3.1.21 (localCivicLocationFloor)
room	Room number or name. **Value** String, max. 16 characters. **OID** 1.3.6.1.4.1.3181.10.6.2.43.3.1.22 (localCivicLocationRoom)

©2026 MICROSENS GmbH & Co. KG - Hamm/Germany - www.microsens.com

place_type	Place type. Example: Office **Value** String, max. 16 characters. **OID** 1.3.6.1.4.1.3181.10.6.2.43.3.1.23 (localCivicLocationPlaceType)
script	The script (from ISO 15924 [14]) used to encode the address information. Default: Latn **Value** String, max. 16 characters. **OID** 1.3.6.1.4.1.3181.10.6.2.43.3.1.24 (localCivicLocationScript)
elin_number	Emergency Call Services (ECS) Emergency Location Identification Number (ELIN). **Value** String, max. 32 characters. **OID** 1.3.6.1.4.1.3181.10.6.2.43.3.1.25 (localCivicLocationElinNumber)

©2026 MICROSENS GmbH & Co. KG - Hamm/Germany - www.microsens.com

33.5 LLDP Status Parameters

Group	**received_overview**, for all ports[0..31]
Path	Protocol.LLDP.received_overview[port]
Description	This table contains received information about the attached device on each local port.

sys_name	System name.	
	Value	String, max. 128 characters.
	OID	1.3.6.1.4.1.3181.10.6.2.43.100.1.2 (receivedOverviewSysName) 1.0.8802.1.1.2.1.4.1.1.9.0 (lldpRemSysName)
sys_desc	System description.	
	Value	String, max. 128 characters.
	OID	1.3.6.1.4.1.3181.10.6.2.43.100.1.3 (receivedOverviewSysDesc) 1.0.8802.1.1.2.1.4.1.1.10.0 (lldpRemSysDesc)
chassis_subtype	Type of chassis id.	
	Values	*UNKNOWN* *CHASSIS_COMPONENT* *INTERFACE_ALIAS* *PORT_COMPONENT* *MAC_ADDRESS* *NETWORK_ADDRESS* *INTERFACE_NAME* *LOCAL*
	OID	1.3.6.1.4.1.3181.10.6.2.43.100.1.4 (receivedOverviewChassisSubtype) 1.0.8802.1.1.2.1.4.1.1.4.0 (lldpRemChassisIdSubType)
chassis_id	Chassis id of received frame.	
	Value	String, max. 128 characters.
	OID	1.3.6.1.4.1.3181.10.6.2.43.100.1.5 (receivedOverviewChassisId) 1.0.8802.1.1.2.1.4.1.1.5.0 (lldpRemChassisId)

©2026 MICROSENS GmbH & Co. KG - Hamm/Germany - www.microsens.com

capabilities_supported — LLDP capabilities supported.

Values

OTHER	Other capabilities
REPEATER	Repeater capabilities
BRIDGE	Bridge capabilities
WLAN	WLAN capabilities
ROUTER	Router capabilities
TELEPHONE	Telephone capabilities
DOCSIS	DOCSIS capabilities
STATION	Station capabilities

OID

1.3.6.1.4.1.3181.10.6.2.43.100.1.6 (receivedOverviewCapabilitiesSupported)
1.0.8802.1.1.2.1.4.1.1.11.0 (lldpRemSysCapSupported)

capabilities_enabled — LLDP capabilities enabled.

Values

OTHER	Other capabilities
REPEATER	Repeater capabilities
BRIDGE	Bridge capabilities
WLAN	WLAN capabilities
ROUTER	Router capabilities
TELEPHONE	Telephone capabilities
DOCSIS	DOCSIS capabilities
STATION	Station capabilities

OID

1.3.6.1.4.1.3181.10.6.2.43.100.1.7 (receivedOverviewCapabilitiesEnabled)
1.0.8802.1.1.2.1.4.1.1.12.0 (lldpRemSysCapEnabled)

med_capabilities — LLDP_MED capabilities.

Values

CAPABILITY	
POLICY	Policy capabilities
LOCATION	Location capabilities
MDI_PSE	MDI/PSE capabilities
MDI_PD	MDI/PD capabilities
INVENTORY	Inventory capabilities

OID

1.3.6.1.4.1.3181.10.6.2.43.100.1.8 (receivedOverviewMedCapabilities)
1.0.8802.1.1.2.1.5.4795.1.1.2.1.1 (lldpXMedPortCapSupported)

©2026 MICROSENS GmbH & Co. KG - Hamm/Germany - www.microsens.com

port_subtype	Type of port id.	
	Values	*UNKNOWN* *INTERFACE_ALIAS* *PORT_COMPONENT* *MAC_ADDRESS* *NETWORK_ADDRESS* *INTERFACE_NAME* *AGENT_CIRCUIT_ID* *LOCAL*
	OID	1.3.6.1.4.1.3181.10.6.2.43.100.1.9 (receivedOverviewPortSubtype) 1.0.8802.1.1.2.1.4.1.1.6.0 (lldpRemPortIdSubType)
port_identification	Port id.	
	Value	String, max. 128 characters.
	OID	1.3.6.1.4.1.3181.10.6.2.43.100.1.10 (receivedOverviewPortIdentification) 1.0.8802.1.1.2.1.4.1.1.7.0 (lldpRemPortId)
port_description	Port description.	
	Value	String, max. 128 characters.
	OID	1.3.6.1.4.1.3181.10.6.2.43.100.1.11 (receivedOverviewPortDescription) 1.0.8802.1.1.2.1.4.1.1.8.0 (lldpRemPortDesc)
port_vlan	Port vlan identifier. Related to port_default_vlan_id.	
	Value	Number in range 0-65535
	OID	1.3.6.1.4.1.3181.10.6.2.43.100.1.12 (receivedOverviewPortVlan)

Group	**received_coordinates**, for all ports[0..31]
Path	Protocol.LLDP.received_coordinates[port]
Description	Detailed GPS information about the physical location of the attached device for each port are visible here if provided through the LLDP-MED protocol.

latitude	A value in degrees such as: 50,123	
	Value	String, max. 8 characters.
	OID	1.3.6.1.4.1.3181.10.6.2.43.102.1.2 (receivedCoordinatesLatitude)

©2026 MICROSENS GmbH & Co. KG - Hamm/Germany - www.microsens.com

lat_resolution	A value in bits. Higher value is more accurate. **Value** Number in range 0-255 **OID** 1.3.6.1.4.1.3181.10.6.2.43.102.1.3 (receivedCoordinatesLatResolution)
longitude	A value in degrees such as: 50,123 **Value** String, max. 8 characters. **OID** 1.3.6.1.4.1.3181.10.6.2.43.102.1.4 (receivedCoordinatesLongitude)
long_resolution	A value in bits. Higher value is more accurate. **Value** Number in range 0-255 **OID** 1.3.6.1.4.1.3181.10.6.2.43.102.1.5 (receivedCoordinatesLongResolution)
altitude	A value in meters or the floor level depending on definition. **Value** String, max. 8 characters. **OID** 1.3.6.1.4.1.3181.10.6.2.43.102.1.6 (receivedCoordinatesAltitude)
alt_resolution	A value in bits. Higher value is more accurate. **Value** Number in range 0-255 **OID** 1.3.6.1.4.1.3181.10.6.2.43.102.1.7 (receivedCoordinatesAltResolution)
alt_unit	Defines in which way the altitude is interpreted. **Values** *METER* Altitude value is defined in meters *FLOOR* Altitude value defines the building floor **OID** 1.3.6.1.4.1.3181.10.6.2.43.102.1.8 (receivedCoordinatesAltUnit)
datum	Name of the map the given coordinates are based upon. **Value** String, max. 16 characters. **OID** 1.3.6.1.4.1.3181.10.6.2.43.102.1.9 (receivedCoordinatesDatum)

Group	**received_civic_locations**, for all ports[0..31]
Path	Protocol.LLDP.received_civic_locations[port]
Description	Detailed address information about the physical location of the attached device for each port are visible here if provided through the LLDP-MED protocol.

©2026 MICROSENS GmbH & Co. KG - Hamm/Germany - www.microsens.com

country_code	Two-letter ISO 3166 country code in capital ASCII letters. Use DE for Germany, etc. **Value** String, max. 4 characters. **OID** 1.3.6.1.4.1.3181.10.6.2.43.103.1.2 (receivedCivicLocationsCountryCode)
language	ISO 639 language code used for presenting the address information. **Value** String, max. 8 characters. **OID** 1.3.6.1.4.1.3181.10.6.2.43.103.1.3 (receivedCivicLocationsLanguage)
national_subdivision	National subdivision: state, canton, region, province, or prefecture. Example: Hessen. **Value** String, max. 16 characters. **OID** 1.3.6.1.4.1.3181.10.6.2.43.103.1.4 (receivedCivicLocationsNationalSubdivision)
county	County / parish / district. Example: Landkreis Darmstadt **Value** String, max. 32 characters. **OID** 1.3.6.1.4.1.3181.10.6.2.43.103.1.5 (receivedCivicLocationsCounty)
town	City / township. Example: Frankfurt **Value** String, max. 32 characters. **OID** 1.3.6.1.4.1.3181.10.6.2.43.103.1.6 (receivedCivicLocationsTown)
district	City district / division / borough / ward. **Value** String, max. 32 characters. **OID** 1.3.6.1.4.1.3181.10.6.2.43.103.1.7 (receivedCivicLocationsDistrict)
block	Neighborhood / block. **Value** String, max. 16 characters. **OID** 1.3.6.1.4.1.3181.10.6.2.43.103.1.8 (receivedCivicLocationsBlock)
street	Name of the street without house number. **Value** String, max. 32 characters. **OID** 1.3.6.1.4.1.3181.10.6.2.43.103.1.9 (receivedCivicLocationsStreet)
leading_street_direction	Use any of these values or leave blank: N,E,W,S,NE,NW,SE,SW. **Value** String, max. 4 characters. **OID** 1.3.6.1.4.1.3181.10.6.2.43.103.1.10 (receivedCivicLocationsLeadingStreetDirection)

©2026 MICROSENS GmbH & Co. KG - Hamm/Germany - www.microsens.com

trailing_street_suffix	Use any of these values or leave blank: N,E,W,S,NE,NW,SE,SW. **Value** String, max. 4 characters. **OID** 1.3.6.1.4.1.3181.10.6.2.43.103.1.11 (receivedCivicLocationsTrailingStreetSuffix)
street_suffix	Street suffix such as place or avenue. **Value** String, max. 8 characters. **OID** 1.3.6.1.4.1.3181.10.6.2.43.103.1.12 (receivedCivicLocationsStreetSuffix)
house_number	House number without a possible suffix. **Value** String, max. 8 characters. **OID** 1.3.6.1.4.1.3181.10.6.2.43.103.1.13 (receivedCivicLocationsHouseNumber)
house_number_suffix	A modifier to the house number. It does not include parts of the house number. Example: a **Value** String, max. 8 characters. **OID** 1.3.6.1.4.1.3181.10.6.2.43.103.1.14 (receivedCivicLocationsHouseNumberSuffix)
landmark	Landmark or vanity address for easier reference. Example: Airport Frankfurt **Value** String, max. 128 characters. **OID** 1.3.6.1.4.1.3181.10.6.2.43.103.1.15 (receivedCivicLocationsLandmark)
additional_info	Additional location information without specified format. **Value** String, max. 128 characters. **OID** 1.3.6.1.4.1.3181.10.6.2.43.103.1.16 (receivedCivicLocationsAdditionalInfo)
name	Identifies the person or organization associated with the address. Example: Sunshine Airline Office **Value** String, max. 128 characters. **OID** 1.3.6.1.4.1.3181.10.6.2.43.103.1.17 (receivedCivicLocationsName)
zip_code	Postal zip code for the address. **Value** String, max. 16 characters. **OID** 1.3.6.1.4.1.3181.10.6.2.43.103.1.18 (receivedCivicLocationsZipCode)
building	The name of the building if this exists. Example: Terminal Building East **Value** String, max. 128 characters. **OID** 1.3.6.1.4.1.3181.10.6.2.43.103.1.19 (receivedCivicLocationsBuilding)

©2026 MICROSENS GmbH & Co. KG - Hamm/Germany - www.microsens.com

unit	Unit / apartment / suite. **Value** String, max. 32 characters. **OID** 1.3.6.1.4.1.3181.10.6.2.43.103.1.20 (receivedCivicLocationsUnit)
floor	Floor value. Example: 1 for first floor. **Value** String, max. 8 characters. **OID** 1.3.6.1.4.1.3181.10.6.2.43.103.1.21 (receivedCivicLocationsFloor)
room	Room number or name. **Value** String, max. 16 characters. **OID** 1.3.6.1.4.1.3181.10.6.2.43.103.1.22 (receivedCivicLocationsRoom)
place_type	Place type. Example: Office. **Value** String, max. 16 characters. **OID** 1.3.6.1.4.1.3181.10.6.2.43.103.1.23 (receivedCivicLocationsPlaceType)
script	The script (from ISO 15924 [14]) used to encode the address information. Default: Latn **Value** String, max. 16 characters. **OID** 1.3.6.1.4.1.3181.10.6.2.43.103.1.24 (receivedCivicLocationsScript)
elin_number	Emergency Call Services (ECS) Emergency Location Identification Number (ELIN). **Value** String, max. 32 characters. **OID** 1.3.6.1.4.1.3181.10.6.2.43.103.1.25 (receivedCivicLocationsElinNumber)

Group	**received_policies**, for all ports[0..31]
Path	Protocol.LLDP.received_policies[port]
Description	Detailed information about the attached applications.

©2026 MICROSENS GmbH & Co. KG - Hamm/Germany - www.microsens.com

application_type

Valid application types.

Values

UNKNOWN	Unspecified application
VOICE	Used by dedicated IP phone handsets and other similar devices supporting interactive voice services
VOICE_SIGNALING	Defines a separate policy for the command and control signaling that supports voice applications
GUEST_VOICE	Limited feature-set voice service for guest users
GUEST_VOICE_SIGNALING	Defines a separate policy for the command and control signaling that supports guest voice applications
SOFTPHONE_VOICE	Used by softphone applications that operate on devices, such as PCs or laptop computers
VIDEO_CONFERENCING	Used by video conferencing applications
STREAMING_VIDEO	Used for streaming video applications
VIDEO_SIGNALING	Defines a separate policy for the command and control of video applications

OID 1.3.6.1.4.1.3181.10.6.2.43.104.1.2 (receivedPoliciesApplicationType)
1.0.8802.1.1.2.1.5.4795.1.3.2.1.1 (lldpXMedRemMediaPolicyAppType)

policy_defined

False indicates policy is unknown. True indicates policy is defined.

Values true, false

OID 1.3.6.1.4.1.3181.10.6.2.43.104.1.3 (receivedPoliciesPolicyDefined)
1.0.8802.1.1.2.1.5.4795.1.3.2.1.5 (lldpXMedRemMediaPolicyUnknown)

tagged_vlan

When set VLAN tagging is used.

Values true, false

OID 1.3.6.1.4.1.3181.10.6.2.43.104.1.4 (receivedPoliciesTaggedVlan)
1.0.8802.1.1.2.1.5.4795.1.3.2.1.6 (lldpXMedRemMediaPolicyTagged)

vlan_id

0 - only the priority level is significant. / IEEE 802.1q VLAN ID (VID) value. Related to voice vlan.

Value Number in range 0-0xFFFFFFFF

OID 1.3.6.1.4.1.3181.10.6.2.43.104.1.5 (receivedPoliciesVlanId)
1.0.8802.1.1.2.1.5.4795.1.3.2.1.2 (lldpXMedRemMediaPolicyVlanID)

layer_2_priority

IEEE 802.1d / IEEE 802.1p Layer 2 Priority.

Values

UNKNOWN	
BACKGROUND	
SPARE	
BEST_EFFORT	Default
EXCELLENT_EFFORT	
CONTROLLED_LOAD	
VIDEO	
VOICE	
NETWORK_CONTROL	

OID 1.3.6.1.4.1.3181.10.6.2.43.104.1.6 (receivedPoliciesLayer2Priority)
1.0.8802.1.1.2.1.5.4795.1.3.2.1.3 (lldpXMedRemMediaPolicyPriority)

©2026 MICROSENS GmbH & Co. KG - Hamm/Germany - www.microsens.com

dscp	DiffServ/Differentiated Services Code Point (DSCP) value as defined in IETF RFC 2474 for the specified application type. **Value** Number in range 0-255 **OID** 1.3.6.1.4.1.3181.10.6.2.43.104.1.7 (receivedPoliciesDscp) 1.0.8802.1.1.2.1.5.4795.1.3.2.1.4 (lldpXMedRemMediaPolicyDscp)

Group	**received_inventory_infos**, for all ports[0..31]
Path	Protocol.LLDP.received_inventory_infos[port]
Description	This table lists general inventory data of the attached equipment.

hardware_revision	Hardware version **Value** String, max. 32 characters. **OID** 1.3.6.1.4.1.3181.10.6.2.43.105.1.2 (receivedInventoryInfosHardwareRevision) 1.0.8802.1.1.2.1.5.4795.1.3.3.1.1.0 (lldpXMedRemHardwareRev)
firmware_revision	Firmware version **Value** String, max. 32 characters. **OID** 1.3.6.1.4.1.3181.10.6.2.43.105.1.3 (receivedInventoryInfosFirmwareRevision) 1.0.8802.1.1.2.1.5.4795.1.3.3.1.2.0 (lldpXMedRemFirmwareRev)
software_revision	Software version **Value** String, max. 32 characters. **OID** 1.3.6.1.4.1.3181.10.6.2.43.105.1.4 (receivedInventoryInfosSoftwareRevision) 1.0.8802.1.1.2.1.5.4795.1.3.3.1.3.0 (lldpXMedRemSoftwareRev)
serial_number	Serial number **Value** String, max. 32 characters. **OID** 1.3.6.1.4.1.3181.10.6.2.43.105.1.5 (receivedInventoryInfosSerialNumber) 1.0.8802.1.1.2.1.5.4795.1.3.3.1.4.0 (lldpXMedRemSerialNum)
manufacturer	Manufacturer name **Value** String, max. 32 characters. **OID** 1.3.6.1.4.1.3181.10.6.2.43.105.1.6 (receivedInventoryInfosManufacturer) 1.0.8802.1.1.2.1.5.4795.1.3.3.1.5.0 (lldpXMedRemMfgName)
model_name	Vendor-specific model name **Value** String, max. 32 characters. **OID** 1.3.6.1.4.1.3181.10.6.2.43.105.1.7 (receivedInventoryInfosModelName) 1.0.8802.1.1.2.1.5.4795.1.3.3.1.6.0 (lldpXMedRemModelName)

©2026 MICROSENS GmbH & Co. KG - Hamm/Germany - www.microsens.com

asset_id

Vendor-specific asset tracking identifier

Value String, max. 32 characters.

OID 1.3.6.1.4.1.3181.10.6.2.43.105.1.8 (receivedInventoryInfosAssetId)
1.0.8802.1.1.2.1.5.4795.1.3.3.1.7.0 (lldpXMedRemAssetID)

Group **received_poe_infos**, for all ports[0..31]
Path Protocol.LLDP.received_poe_infos[port]
Description Detailed PoE information about the attached applications.

type

Type of PoE equipment.

Values

UNKNOWN	No information received
PSE	Power Sourcing Equipment
PD	Powered Device
NO_POE	The device does not support PoE

OID 1.3.6.1.4.1.3181.10.6.2.43.106.1.2 (receivedPoeInfosType)
1.0.8802.1.1.2.1.5.4795.1.3.5.1.1 (lldpXMedRemXPoEDeviceType)

source

Describes the power source.

Values

UNKNOWN	No information received
PD_PSE_PRIMARY	For type PD: Power source is the PSE. For type PSE: Power source is the primary power source
PD_LOCAL_BACKUP	For type PD: Power source is a local source. For type PSE: Power source is the backup power source
PD_PSE_LOCAL	For type PD: The power source is both the PSE and a local source. For type PSE: this value should not occur

OID 1.3.6.1.4.1.3181.10.6.2.43.106.1.3 (receivedPoeInfosSource)
1.0.8802.1.1.2.1.5.4795.1.3.6.1.2 (lldpXMedRemXPoEPSEPowerSource)

priority

Indicates priority of this device.

Values

UNKNOWN	No information received
CRITICAL	Critical priority
HIGH	High priority
LOW	Low priority

OID 1.3.6.1.4.1.3181.10.6.2.43.106.1.4 (receivedPoeInfosPriority)
1.0.8802.1.1.2.1.5.4795.1.3.6.1.3 (lldpXMedRemXPoEPSEPowerPriority)

value

Indicates the power available from the PSE via this port expressed in units of 0.1 watts on the remote device.

Value Number in range 0-0xFFFFFFFF

OID 1.3.6.1.4.1.3181.10.6.2.43.106.1.5 (receivedPoeInfosValue)
1.0.8802.1.1.2.1.5.4795.1.3.6.1.1 (lldpXMedRemXPoEPSEPowerAv)

©2026 MICROSENS GmbH & Co. KG - Hamm/Germany - www.microsens.com

Group	**received_poe_control**, for all ports[0..31]
Path	Protocol.LLDP.received_poe_control[port]
Description	

type

Indicates device type.

Values

UNKNOWN	No information received
PSE	Power Sourcing Equipment
PD	Powered Device
NO_POE	The device does not support PoE

OID 1.3.6.1.4.1.3181.10.6.2.43.107.1.2 (receivedPoeControlType)
1.3.111.2.802.3.1.5.1.3.2.1.1 (lldpV2Xdot3RemPowerPortClass)

poe_power_supported

Indicates if PoE is supported by the interface.

Values true, false

OID 1.3.6.1.4.1.3181.10.6.2.43.107.1.3 (receivedPoeControlPoePowerSupported)
1.3.111.2.802.3.1.5.1.3.2.1.2 (lldpV2Xdot3RemPowerMDISupported)

poe_power_enabled

Indicates if PoE is enabled for this interface.

Values true, false

OID 1.3.6.1.4.1.3181.10.6.2.43.107.1.4 (receivedPoeControlPoePowerEnabled)
1.3.111.2.802.3.1.5.1.3.2.1.3 (lldpV2Xdot3RemPowerMDIEnabled)

pair_control

Indicates if the pair selection can be controlled on the given port

Values true, false

OID 1.3.6.1.4.1.3181.10.6.2.43.107.1.5 (receivedPoeControlPairControl)
1.3.111.2.802.3.1.5.1.3.2.1.4 (lldpV2Xdot3RemPowerPairControlable)

power_pairs

Indicates which pins of the plug are used for power.

Values

SIGNAL	The signal pairs only are in use
SPARE	The spare pairs only are in use

OID 1.3.6.1.4.1.3181.10.6.2.43.107.1.6 (receivedPoeControlPowerPairs)
1.3.111.2.802.3.1.5.1.3.2.1.5 (lldpV2Xdot3RemPowerPairs)

power_class

Required PoE class.

Values *NO_CLASS*, *CLASS_0*, *CLASS_1*, *CLASS_2*, *CLASS_3*, *CLASS_4*

OID 1.3.6.1.4.1.3181.10.6.2.43.107.1.7 (receivedPoeControlPowerClass)
1.3.111.2.802.3.1.5.1.3.2.1.6 (lldpV2Xdot3RemPowerClass)

©2026 MICROSENS GmbH & Co. KG - Hamm/Germany - www.microsens.com

device_type	Type of PoE equipment. **Value** Number in range 0-255 **OID** 1.3.6.1.4.1.3181.10.6.2.43.107.1.8 (receivedPoeControlDeviceType) 1.3.111.2.802.3.1.5.1.3.2.1.7 (lldpV2Xdot3RemPowerType)
source	Indicates the power source. **Values** *UNKNOWN* No information received *PD_PSE_PRIMARY* For type PD: Power source is the PSE. For type PSE: Power source is the primary power source *PD_LOCAL_BACKUP* For type PD: Power source is a local source. For type PSE: Power source is the backup power source *PD_PSE_LOCAL* For type PD: The power source is both the PSE and a local source. For type PSE: this value should not occur **OID** 1.3.6.1.4.1.3181.10.6.2.43.107.1.9 (receivedPoeControlSource) 1.3.111.2.802.3.1.5.1.3.2.1.8 (lldpV2Xdot3RemPowerSource)
priority	Priority of the attached port. **Values** *UNKNOWN* No information received *CRITICAL* Critical priority *HIGH* High priority *LOW* Low priority **OID** 1.3.6.1.4.1.3181.10.6.2.43.107.1.10 (receivedPoeControlPriority) 1.3.111.2.802.3.1.5.1.3.2.1.9 (lldpV2Xdot3RemPowerPriority)
pd_requested_power	PD requested power value in multiple of 0.1W **Value** Number in range 0-0xFFFFFFFF **OID** 1.3.6.1.4.1.3181.10.6.2.43.107.1.11 (receivedPoeControlPdRequestedPower) 1.3.111.2.802.3.1.5.1.3.2.1.10 (lldpV2Xdot3RemPDRequestedPowerValue)
pse_allocated_power	PSE allocated power value in multiple of 0.1W **Value** Number in range 0-0xFFFFFFFF **OID** 1.3.6.1.4.1.3181.10.6.2.43.107.1.12 (receivedPoeControlPseAllocatedPower) 1.3.111.2.802.3.1.5.1.3.2.1.11 (lldpV2Xdot3RemPSEAllocatedPowerValue)

©2026 MICROSENS GmbH & Co. KG - Hamm/Germany - www.microsens.com

34 Link Aggregation Control Protocol (LACP)

34.1 Key Features

Static Link Aggregation

Multiplies available bandwidth between two end points. The setup is manually. Up to 16 groups of any number of ports per group.

Bandwidth in shared to increase link throughput.

Dynamic Link Aggregation

Multiplies available bandwidth between two end points. The setup is dynamic within a predefined group of ports.

The protocol negotiates a slower link to automatically continue operation in the event of a (sub)link failure.

Load Balancing and Trunking

Load balancing between ports that have the same path increases throughput and provides a backup link upon failure. Also known as EtherChannel (in LACP mode).

Increased uplink throughput and improved resilience against link failures.

IEEE 802.1X Supplicant should authenticate on every port of a LACP trunk

If the uplink interface of the device is an aggregated LACP trunk, it is possible to use the IEEE 802.1X Supplicant to authenticate on the upstream switch port. To use this feature just configure the Supplicant port as one of the ports of the LACP trunk.

34.2 Functional Description

Link Aggregation Control Protocol (LACP) provides a method to control the bundling of several physical ports together to form a single logical channel for the purpose of providing fault-tolerance and high-speed links between switches, routers and servers.

LACP works by sending frames (LACPDUs) down all links that have the protocol enabled. If it finds a device on the other end of the link that also has LACP enabled, it will also independently send frames along the same links enabling the two units to detect multiple links between themselves and then combine them into a single logical link.

LACP can be configured in one of two modes: active or passive. In active mode it will always send frames along the configured links. In passive mode however, it acts as "speak when spoken to", and therefore can be used as a way of controlling accidental loops (as long as the other device is in active mode).

Example

For LACP the aggregation type must be set to dynamic (default value):

```
Protocol.LACP.config.link_aggregation = DYNAMIC
```

©2026 MICROSENS GmbH & Co. KG - Hamm/Germany - www.microsens.com

The LACP mode can be set to active (default value) or passive. In active mode, each port actively sends LACP packets. In passive mode, each port will only respond to received LACP packets:

```
Protocol.LACP.config.mode = ACTIVE
```

The LACP implementation supports a maximum of 16 aggregation groups (channels) with the channel id ranging from 1 to 16. Before using LACP, at least one group must be defined:

```
Protocol.LACP.trunk_config[1].trunk_enable = Enabled
```

This enables the aggregation group with id#1.

Now this channel can be assigned to the member ports:

```
Protocol.LACP.port_config[2/1].trunk_id = 1
Protocol.LACP.port_config[2/2].trunk_id = 1
Protocol.LACP.port_config[2/3].trunk_id = 1
Protocol.LACP.port_config[2/4].trunk_id = 1
```

This assigns ports 2/1 to 2/4 as member of the LACP channel with id#1. Please note that the default trunk_id value is 0 which means no channel.

Now LACP works on the configured ports.

©2026 MICROSENS GmbH & Co. KG - Hamm/Germany - www.microsens.com

34.3 LACP CLI Command Reference

The following table lists all CLI commands applicable for this feature section. For each parameter, the access mode is given:

R = Read Only, R/W = Read/Write, X = Executable Action.

Please note that the effective access rights are dependent on the login level of the user.

Category	Group	Table	Parameter	Options	Access	Description
Protocol.						
	lacp.					Link Aggregation Control Protocol (LACP)
			enable_lacp		R/W	General enable of LACP function.
		config.				
			link_aggregation		R/W	With static setting the link aggregation operates exactly on the ports defined via trunk configuration. Dynamic uses protocol between both endpoints to dynamically use as many or little links as currently available.
			system_priority		R/W	Priority associated with the system.
			mode		R/W	Determines active or passive operational mode.
			transmit_interval		R/W	Determine LACP PDU interval.
		port_config[PORT].				Configuration parameter concerning the port specific LACP settings
			trunk_id		R/W	All ports with the same trunk_id form a common trunk. Use trunk_id 0 for ports that do not belong to any LACP trunk. The trunk_id corresponds to the trunk_config[index].
		trunk_config[16].				Each trunk is referenced by its index number.
			name		R/W	Unique name used to identify the trunk Interface.
			trunk_enable		R/W	Enables the trunk for operation. When disabled, trunk is brought down.
		port_status[PORT].				Displays the negotiated and active settings of LACP parameters.
			trunk_name		R	Name of the trunk to which port is associated.
			trunk_id		R	interface index value of the trunk to which port is attached.
			activity_mode		R	
			synchronized		R	True when trunk is synchronized.
			aggregation_possible		R	Indicates link is aggregable or not.

©2026 MICROSENS GmbH & Co. KG - Hamm/Germany - www.microsens.com

	collection	R	Collection of incoming frames on this link is enabled or disabled.
	distribution	R	Distribution of outgoing frames on this link is enabled or disabled.
	expired_state	R	True indicates that the actor is in the EXPIRED state
	defaulted_state	R	When true default configured operational partner information are used. If false the partner information in use has been received in a LACP PDU.
actor_status[PORT].			Actor specific status values.
	system_priority	R	Priority associated with the system
	system_id	R	Mac address of the switch
	port	R	Port number assigned by LACP which is local to LACP.
	priority	R	Priority assigned to the port.
	admin_key	R	current administration key value of the port.
	oper_key	R	current operational key value of the port.
	transmit_interval	R	Indicates the link partners transmit interval.
partner_status[PORT].			Partner specific status values.
	system_priority	R	Priority associated with the system
	system_id	R	Mac address of the switch
	port	R	Port number assigned by LACP which is local to LACP.
	priority	R	Priority assigned to the port.
	admin_key	R	current administration key value of the port.
	oper_key	R	current operational key value of the port.
	receive_interval	R	Partner requesting transmission interval from actor. TRUE send PDUs for every 1 sec, FALSE every 30 secs.
	activity_mode	R	
	synchronized	R	True when trunk is synchronized.
	aggregation_possible	R	Indicates link is aggregable or not.
	collection	R	Collection of incoming frames on this link is enabled or disabled.
	distribution	R	Distribution of outgoing frames on this link is enabled or disabled.
	expired_state	R	True indicates that the actor is in the EXPIRED state

©2026 MICROSENS GmbH & Co. KG - Hamm/Germany - www.microsens.com

defaulted_state	R	When true default configured operational partner information are used. If false the partner information in use has been received in a LACP PDU.

©2026 MICROSENS GmbH & Co. KG - Hamm/Germany - www.microsens.com

34.4 LACP Configuration Parameters

Group	**General Parameters**
Path	Protocol.LACP

enable_lacp	General enable of LACP function. **Values** enabled, disabled **OID** 1.3.6.1.4.1.3181.10.6.2.54.1 (lacpEnableLacp)

Group	**port_config**, for each port[0..24]
Path	Protocol.LACP.port_config[port]
Description	Configuration parameter concerning the port specific LACP settings

trunk_id	All ports with the same trunk_id form a common trunk. Use trunk_id 0 for ports that do not belong to any LACP trunk. The trunk_id corresponds to the trunk_config[index]. **Value** Number in range 0-16 **OID** 1.3.6.1.4.1.3181.10.6.2.54.3.1.2 (portConfigTrunkId)

Group	**config**
Path	Protocol.LACP.config
Description	

link_aggregation	With static setting the link aggregation operates exactly on the ports defined via trunk configuration. Dynamic uses protocol between both endpoints to dynamically use as many or little links as currently available. **Values** *STATIC* Use trunk configuration *DYNAMIC* Use LACP to dynamically use all available links **OID** 1.3.6.1.4.1.3181.10.6.2.54.2.1.2 (configLinkAggregation)
system_priority	Priority associated with the system. **Value** Number in range 0-65535 **OID** 1.3.6.1.4.1.3181.10.6.2.54.2.1.3 (configSystemPriority)

©2026 MICROSENS GmbH & Co. KG - Hamm/Germany - www.microsens.com

mode	Determines active or passive operational mode.		
	Values	*PASSIVE*	Only respond to received LACP PDU
		ACTIVE	Actively send LACP PDUs every 30s
	OID	1.3.6.1.4.1.3181.10.6.2.54.2.1.4 (configMode)	
transmit_interval	Determine LACP PDU interval.		
	Values	*SLOW*	Request partner to send LACP PDUs every 30 sec
		FAST	Request partner to send LACP PDUs every 1 sec
	OID	1.3.6.1.4.1.3181.10.6.2.54.2.1.5 (configTransmitInterval)	

©2026 MICROSENS GmbH & Co. KG - Hamm/Germany - www.microsens.com

34.5 LACP Status Parameters

Group	**port_status**, for each port[0..24]
Path	Protocol.LACP.port_status[port]
Description	Displays the negotiated and active settings of LACP parameters.

trunk_name	Name of the trunk to which port is associated.	
	Value	String, max. 32 characters.
	OID	1.3.6.1.4.1.3181.10.6.2.54.100.1.2 (portStatusTrunkName)
trunk_id	interface index value of the trunk to which port is attached.	
	Value	Number in range 0-255
	OID	1.3.6.1.4.1.3181.10.6.2.54.100.1.3 (portStatusTrunkId)
activity_mode		
	Values	*PASSIVE* Only respond to received LACP PDU *ACTIVE* Actively send LACP PDUs every 30s
	OID	1.3.6.1.4.1.3181.10.6.2.54.100.1.4 (portStatusActivityMode)
synchronized	True when trunk is synchronized.	
	Values	true, false
	OID	1.3.6.1.4.1.3181.10.6.2.54.100.1.5 (portStatusSynchronized)
aggregation_possible	Indicates link is aggregable or not.	
	Values	true, false
	OID	1.3.6.1.4.1.3181.10.6.2.54.100.1.6 (portStatusAggregationPossible)
collection	Collection of incoming frames on this link is enabled or disabled.	
	Values	true, false
	OID	1.3.6.1.4.1.3181.10.6.2.54.100.1.7 (portStatusCollection)
distribution	Distribution of outgoing frames on this link is enabled or disabled.	
	Values	true, false
	OID	1.3.6.1.4.1.3181.10.6.2.54.100.1.8 (portStatusDistribution)

©2026 MICROSENS GmbH & Co. KG - Hamm/Germany - www.microsens.com

expired_state	True indicates that the actor is in the EXPIRED state **Values** true, false **OID** 1.3.6.1.4.1.3181.10.6.2.54.100.1.9 (portStatusExpiredState)
defaulted_state	When true default configured operational partner information are used. If false the partner information in use has been received in a LACP PDU. **Values** true, false **OID** 1.3.6.1.4.1.3181.10.6.2.54.100.1.10 (portStatusDefaultedState)

Group	**actor_status**, for each port[0..24]
Path	Protocol.LACP.actor_status[port]
Description	Actor specific status values.
system_priority	Priority associated with the system **Value** Number in range 0-65535 **OID** 1.3.6.1.4.1.3181.10.6.2.54.101.1.2 (actorStatusSystemPriority)
system_id	Mac address of the switch **Format** MAC Address *hh-hh-hh-hh-hh-hh* (*hh* = hexadecimal number between 00 to ff) **OID** 1.3.6.1.4.1.3181.10.6.2.54.101.1.3 (actorStatusSystemId)
port	Port number assigned by LACP which is local to LACP. **Value** Number in range 0-65535 **OID** 1.3.6.1.4.1.3181.10.6.2.54.101.1.4 (actorStatusPort)
priority	Priority assigned to the port. **Value** Number in range 0-65535 **OID** 1.3.6.1.4.1.3181.10.6.2.54.101.1.5 (actorStatusPriority)
admin_key	current administration key value of the port. **Value** Number in range 0-65535 **OID** 1.3.6.1.4.1.3181.10.6.2.54.101.1.6 (actorStatusAdminKey)
oper_key	current operational key value of the port. **Value** Number in range 0-65535 **OID** 1.3.6.1.4.1.3181.10.6.2.54.101.1.7 (actorStatusOperKey)

©2026 MICROSENS GmbH & Co. KG - Hamm/Germany - www.microsens.com

transmit_interval	Indicates the link partners transmit interval. **Values** *SLOW* Partner is sending LACP PDUs every 30 sec *FAST* Partner is sending LACP PDUs every 1 sec **OID** 1.3.6.1.4.1.3181.10.6.2.54.101.1.8 (actorStatusTransmitInterval)

Group	**partner_status**, for each port[0..24]
Path	Protocol.LACP.partner_status[port]
Description	Partner specific status values.
system_priority	Priority associated with the system **Value** Number in range 0-65535 **OID** 1.3.6.1.4.1.3181.10.6.2.54.102.1.2 (partnerStatusSystemPriority)
system_id	Mac address of the switch **Format** MAC Address *hh-hh-hh-hh-hh-hh* (*hh* = hexadecimal number between 00 to ff) **OID** 1.3.6.1.4.1.3181.10.6.2.54.102.1.3 (partnerStatusSystemId)
port	Port number assigned by LACP which is local to LACP. **Value** Number in range 0-65535 **OID** 1.3.6.1.4.1.3181.10.6.2.54.102.1.4 (partnerStatusPort)
priority	Priority assigned to the port. **Value** Number in range 0-65535 **OID** 1.3.6.1.4.1.3181.10.6.2.54.102.1.5 (partnerStatusPriority)
admin_key	current administration key value of the port. **Value** Number in range 0-65535 **OID** 1.3.6.1.4.1.3181.10.6.2.54.102.1.6 (partnerStatusAdminKey)
oper_key	current operational key value of the port. **Value** Number in range 0-65535 **OID** 1.3.6.1.4.1.3181.10.6.2.54.102.1.7 (partnerStatusOperKey)

©2026 MICROSENS GmbH & Co. KG - Hamm/Germany - www.microsens.com

receive_interval	Partner requesting transmission interval from actor. TRUE send PDUs for every 1 sec, FALSE every 30 secs. **Values**: *SLOW* Partner is sending LACP PDUs every 30 sec; *FAST* Partner is sending LACP PDUs every 1 sec **OID**: 1.3.6.1.4.1.3181.10.6.2.54.102.1.8 (partnerStatusReceiveInterval)
activity_mode	**Values**: *PASSIVE* Only respond to received LACP PDU; *ACTIVE* Actively send LACP PDUs every 30s **OID**: 1.3.6.1.4.1.3181.10.6.2.54.102.1.9 (partnerStatusActivityMode)
synchronized	True when trunk is synchronized. **Values**: true, false **OID**: 1.3.6.1.4.1.3181.10.6.2.54.102.1.10 (partnerStatusSynchronized)
aggregation_possible	Indicates link is aggregable or not. **Values**: true, false **OID**: 1.3.6.1.4.1.3181.10.6.2.54.102.1.11 (partnerStatusAggregationPossible)
collection	Collection of incoming frames on this link is enabled or disabled. **Values**: true, false **OID**: 1.3.6.1.4.1.3181.10.6.2.54.102.1.12 (partnerStatusCollection)
distribution	Distribution of outgoing frames on this link is enabled or disabled. **Values**: true, false **OID**: 1.3.6.1.4.1.3181.10.6.2.54.102.1.13 (partnerStatusDistribution)
expired_state	True indicates that the actor is in the EXPIRED state **Values**: true, false **OID**: 1.3.6.1.4.1.3181.10.6.2.54.102.1.14 (partnerStatusExpiredState)
defaulted_state	When true default configured operational partner information are used. If false the partner information in use has been received in a LACP PDU. **Values**: true, false **OID**: 1.3.6.1.4.1.3181.10.6.2.54.102.1.15 (partnerStatusDefaultedState)

©2026 MICROSENS GmbH & Co. KG - Hamm/Germany - www.microsens.com

35 Ring

35.1 Key Features

MICROSENS Ring Protocol

MICROSENS ring redundancy protocol. Up to 2 independent rings can be handled by a single device simultaneously. Typical 50ms ring recovery upon break of a ring is provided. The previous generation G5 and the G6 Ring protocols are compatible and interwork.

MICROSENS ring protocol does not require any third party license costs.

Media Rundancy Protocol (MRP)

(Industrial Switch only)
MRP is an alternative ring redudancy protocol. It is predominatly used in ProfiNet networks.

Typically used in industrial applications.

Ethernet Ring Protection Switching (ERPS)

(Industrial Switch only)
ITU-T G.8032 Ethernet Ring Protection Switching is an alternative ring protocol supported by various vendors.

Unlike the MICROSENS ring, ERPS works of VLAN basis.

35.2 Functional Description

The Ring protocol is designed to automatically switchover data traffic in a ring network, should a failure in one of the ports or cables occur. In case of failure of a node or segment, the ring master automatically reconfigures the remaining switches for continued data flow.

Up to two independent rings can be handled by the switch simultaneously. Each ring may typical have 10- 20 other switches as members.

©2026 MICROSENS GmbH & Co. KG - Hamm/Germany - www.microsens.com

35.3 Ring CLI Command Reference

The following table lists all CLI commands applicable for this feature section. For each parameter, the access mode is given:

R = Read Only, R/W = Read/Write, X = Executable Action.

Please note that the effective access rights are dependent on the login level of the user.

Category	Group	Table	ParameterOptions	Access	Description
Protocol.					
	ring.				Proprietory MICROSENS redundant ring or ERPS or MRP ring related settings and status values.
		config[4].			This section is used to configure the MICROSENS ring protocol which provides fast network redundancy.
			name	R/W	User defined ring name is purely informational.
			enable_ring	R/W	Used to enable the redundant ring function.
			ring_master	R/W	When enabled this unit is designated as ring master. There can only be one master in a ring.
			number	R/W	Ring number must be set identical for each member of a ring. When left unassigned the default setting 1 for index 1 and 2 for index 2 and so on is used.
			port_a	R/W	Port number for ring side A
			port_b	R/W	Port number for ring side B. Ring master blocks port B when ring is ok.
			failure_detection	R/W	For normal ring applications set detection to BOTH_PORTS. Other settings are required when two rings are coupled with 2 parallel links for redundant inter-ring traffic. In this case not all links should be monitored in order to avoid a possible loop condition. Careful planning is advised.
		erps_config[4].			This section is used to configure an ERPS ring protocol which provides standardized fast network redundancy. ERPS works on VLAN basis.
			name	R/W	User defined ring name is purely informational.
			enable_erps_type	R/W	Used to enable the ERPS redundant ring function and to select ring type.
			erps_version	R/W	Select which version of the protocol is used. Select V2 unless V1 is required for compatibility.

©2026 MICROSENS GmbH & Co. KG - Hamm/Germany - www.microsens.com

erps_id	R/W	A value from 1-255. 0 indicates unused. The same id must be used within all ring nodes.
control_vlan_id	R/W	VLAN used for ERS control messages. Cannot be left at 0 for proper operation.
rpl_role	R/W	RPL (Ring Protection Link) role.
ring_port_east	R/W	Port number for ring port in east direction.
ring_port_west	R/W	Port number for ring port in west direction.
rpl_port	R/W	Defines which of the 2 ring ports is the RPL port. Only applies when rpl_role=OWNER.
revertive_mode	R/W	When enabled, the ring will revert to original setting once error condition has ended.
wtr_timer	R/W	A value in minutes which defines how long the link must be up again before reverting to normal operation.
guard_timer	R/W	The guard timer starts when the port detects a link recovery. This timer prevents R-APS packets from affecting the link switching performance when multiple points of failures exist. Use a value between 10 to 20000ms.
manual_override	X	Action may be used for manual testing. Syntax: manual_override = CMD PORT. Possible commands: FS (Forced Switch), MS (Manual Switch), CLR (Clear override). For port use EAST or WEST. Example: = MS EAST
mrp_config.		This section is used to configure the MRP ring protocol.
enable_mrp	R/W	Used to enable the MRP ring function. Only enable when all MRP and VLAN settings have been set. Only close cable connections of the ring when all nodes have been enabled.
domain_name	R/W	User defined ring name is purely informational. When specified, the name will be inserted in all MRP related events. When left blank, the UUID of the MRP ring is inserted instead.
expected_role	R/W	Determines role of this node in the ring. Configure only one master per ring.
react_on_link_change	R/W	When enabled the manager reacts to link change messages from a client. Disable this feature only when any member of the ring does not support react on link change feature. Also known as Advanced Mode. Only applies to manager role.

©2026 MICROSENS GmbH & Co. KG - Hamm/Germany - www.microsens.com

	recovery_time	R/W	Specifies the guaranteed maximum recovery time (i.e. Time from the fault event to the time when the network regains its required communication function). Only applies to manager role.
	port_1	R/W	Port number for ring side 1
	port_2	R/W	Port number for ring side 2. Ring master blocks B when ring is ok
	vlan_id	R/W	When using a VLAN ensure that the rings ports are configured as member of the VLAN in the vlan settings. Leave this field blank or set to 0 when no VLAN is used.
	reset_round_trip_delays	X	When executed the min_round_trip_delay and max_round_trip_delay values are reset to 0. This has no service implications.
	reset_statistics	X	When executed statistics related to this MRP ring are cleared. This has no service implications.
status[4].			Status values display the current condition of the ring network.
	state	R	
	last_state_change	R	Time and date string indication when the state of the ring protocol has last changed to the state now indicated.
	ring_interrupt	R	This indicates that at least one of the two ring ports is blocked. It is an OR of the port_a and port_b interrupt status fields. Note that the name may be misleading. Interrupted is to be understood as the port being actively blocked by the protocol to interrupt the traffic to prevent a network loop. This is part of normal operation.
	global_ring_alarm	R	This indicates that somewhere in the overall ring a failure exists. It does not neccessarily indicate loss of data. Observe the overall state to determine this.
	error_detected	R	Applies to the ring master. Indicates that the master has detected an error on one of the ports.
	ring_port_a_interrupted	R	Indicates that ring port_a is blocked. See parameter ring_interrupt for details.
	ring_port_b_interrupted	R	Indicates that ring port_a is blocked. See parameter ring_interrupt for details.
	ring_port_a_neighbor	R	This field indicates problems associated with the device connect to ring port_a. The issue may be located in the connected device, not locally!

©2026 MICROSENS GmbH & Co. KG - Hamm/Germany - www.microsens.com

	ring_port_b_neighbor	R	This field indicates problems associated with the device connect to ring port_b. The issue may be located in the connected device, not locally!
statistics[4].			Statistics of the ring network performance.
	number_of_backups	R	Counts the number of backups engaged since the last power up.
	current_backup_duration	R	Indicates since how long a currently active backup is established. When no backup is active a 0 is displayed.
	last_backup_duration	R	Indicates since how long the last backup was established. Indicates 0 if there was no backup since last reboot.
	total_backup_duration	R	Total time the ring was in backup since last reboot.
erps_status[4].			Statistics of the ring network performance.
	east_port_state	R	Indicates the current state of the east port..
	west_port_state	R	Indicates the current state of the east port..
	erps_ring_state	R	Indicates the current state of the overall ring
	last_update_time	R	Indicates the time when the status settings were last changed.
mrp_status.			Status common to manager and client
	operation	R	Indicates if MRP function is enabled.
	admin_role	R	Mirrors expected role configuration.
	operational_role	R	real_role ??
	port_1_state	R	
	port_2_state	R	
	domain_id	R	When left blank the default id of all bits 1 is used.
	domain_error	R	
mrp_manager_status.			Status that applies to manager only. Invalid when in client mode.
	ring_state	R	Indicates of MRP is enabled on this device.
	manager_priority	R	The priority of this MRP entity.
	ring_open_count	R	Counts how many times was the ring broken.
	time_since_last_ring_open	R	Seconds since the ring was last opened.
	max_round_trip_delay	R	The longest round trip delay that was measured since value reset. Value in microseconds
	min_round_trip_delay	R	The shortest round trip delay that was measured since value reset. Value in microseconds

©2026 MICROSENS GmbH & Co. KG - Hamm/Germany - www.microsens.com

	topology_change_interval	R	Interval for sending of MRP_TopologyChange messages
	topo_change_repeat_count	R	Topology change repeat count for repeated transmission of MRP_TopologyChange messages
	short_test_interval	R	Short interval for sending of MRP_Test messages after link changes on the ring
	default_test_interval	R	Default interval for sending of MRP_Test messages on the ring
	test_monitor_count	R	Count for monitoring the reception of MRP_Test messages
	test_monitor_ext_count	R	The extended interval count for monitoring the reception of MRP_Test messages
	nonblocking_support	R	False indicates that the manager requires ring clients that support port blocking. This is standard behavior of any modern switch.
mrp_client_status.			Status that applies to client only. Invalid when in manager mode.
	link_down_timer	R	The interval for sending of MRP_linkDown messages
	link_up_timer	R	The interval for sending of MRP_linkUp messages
	link_change_count	R	The count for repeated transmission of MRP_LinkChange messages
	blocked_support	R	True indicates that this client supports port blocking. The value is always true.

©2026 MICROSENS GmbH & Co. KG - Hamm/Germany - www.microsens.com

35.4 Ring Configuration Parameters

Group	**config**, for all ring indices [1..4]
Path	Protocol.Ring.config[index]
Description	This section is used to configure the MICROSENS ring protocol which provides fast network redundancy.

name	User defined ring name is purely informational. **Value** String, max. 32 characters. **OID** 1.3.6.1.4.1.3181.10.6.2.45.1.1.2 (configName)
enable_ring	Used to enable the redundant ring function. **Values** enabled, disabled **OID** 1.3.6.1.4.1.3181.10.6.2.45.1.1.3 (configEnableRing)
ring_master	When enabled this unit is designated as ring master. There can only be one master in a ring. **Values** enabled, disabled **OID** 1.3.6.1.4.1.3181.10.6.2.45.1.1.4 (configRingMaster)
number	Ring number must be set identical for each member of a ring. When left unassigned the default setting 1 for index 1 and 2 for index 2 and so on is used. **Value** Number in range 0-255 **OID** 1.3.6.1.4.1.3181.10.6.2.45.1.1.5 (configNumber)
port_a	Port number for ring side A **Value** PORT0-255 **OID** 1.3.6.1.4.1.3181.10.6.2.45.1.1.6 (configPortA)
port_b	Port number for ring side B. Ring master blocks port B when ring is ok. **Value** PORT0-255 **OID** 1.3.6.1.4.1.3181.10.6.2.45.1.1.7 (configPortB)

©2026 MICROSENS GmbH & Co. KG - Hamm/Germany - www.microsens.com

failure_detection	For normal ring applications set detection to BOTH_PORTS. Other settings are required when two rings are coupled with 2 parallel links for redundant inter-ring traffic. In this case not all links should be monitored in order to avoid a possible loop condition. Careful planning is advised.
Values	*BOTH_PORTS* Normal setting. Link loss on both ring ports is detected and reported
	PORT_A Only link loss of port_a is detected. Port_b errors are ignored
	PORT_B Only link loss of port_b is detected. Port_a errors are ignored
	NONE No link loss of any port affects the ring status.For intermediate nodes in inter-ring coupling
OID	1.3.6.1.4.1.3181.10.6.2.45.1.1.8 (configFailureDetection)

Group	**mrp_config**
Path	Protocol.Ring.mrp_config
Description	This section is used to configure the MRP ring protocol.

enable_mrp	Used to enable the MRP ring function. Only enable when all MRP and VLAN settings have been set. Only close cable connections of the ring when all nodes have been enabled.
Values	enabled, disabled
OID	1.3.6.1.4.1.3181.10.6.2.45.3.1.2 (mrpConfigEnableMrp)

domain_name	User defined ring name is purely informational. When specified, the name will be inserted in all MRP related events. When left blank, the UUID of the MRP ring is inserted instead.
Value	String, max. 240 characters.
OID	1.3.6.1.4.1.3181.10.6.2.45.3.1.3 (mrpConfigDomainName) 1.0.62439.1.1.1.3 (mrpDomainName)

expected_role	Determines role of this node in the ring. Configure only one master per ring.
Values	*CLIENT* Normal ring node
	MANAGER Master ring node
OID	1.3.6.1.4.1.3181.10.6.2.45.3.1.4 (mrpConfigExpectedRole)

©2026 MICROSENS GmbH & Co. KG - Hamm/Germany - www.microsens.com

react_on_link_change

When enabled the manager reacts to link change messages from a client. Disable this feature only when any member of the ring does not support react on link change feature. Also known as Advanced Mode. Only applies to manager role.

Values enabled, disabled

OID 1.3.6.1.4.1.3181.10.6.2.45.3.1.5 (mrpConfigReactOnLinkChange)
1.0.62439.1.1.1.20 (mrpDomainMRMReactOnLinkChange)

recovery_time

Specifies the guaranteed maximum recovery time (i.e. Time from the fault event to the time when the network regains its required communication function). Only applies to manager role.

Values

RECOVERY_TIME_500_MS	Worst ring recovery time is 500ms
RECOVERY_TIME_200_MS	Worst ring recovery time is 200ms

OID 1.3.6.1.4.1.3181.10.6.2.45.3.1.6 (mrpConfigRecoveryTime)

port_1

Port number for ring side 1

Value PORT0-255

OID 1.3.6.1.4.1.3181.10.6.2.45.3.1.7 (mrpConfigPort1)
1.0.62439.1.1.1.6 (mrpDomainRingPort1)

port_2

Port number for ring side 2. Ring master blocks B when ring is ok

Value PORT0-255

OID 1.3.6.1.4.1.3181.10.6.2.45.3.1.8 (mrpConfigPort2)
1.0.62439.1.1.1.8 (mrpDomainRingPort2)

vlan_id

When using a VLAN ensure that the rings ports are configured as member of the VLAN in the vlan settings. Leave this field blank or set to 0 when no VLAN is used.

Value Number in range 0-4095

OID 1.3.6.1.4.1.3181.10.6.2.45.3.1.9 (mrpConfigVlanId)
1.0.62439.1.1.1.13 (mrpDomainVlanId)

reset_round_trip_delays

When executed the min_round_trip_delay and max_round_trip_delay values are reset to 0. This has no service implications.

Action Excecute command.

OID 1.3.6.1.4.1.3181.10.6.2.45.3.1.10 (mrpConfigResetRoundTripDelays)
1.0.62439.1.1.1.19 (mrpDomainResetRoundTripDelays)

©2026 MICROSENS GmbH & Co. KG - Hamm/Germany - www.microsens.com

reset_statistics	When executed statistics related to this MRP ring are cleared. This has no service implications.	
	Action	Excecute command.
	OID	1.3.6.1.4.1.3181.10.6.2.45.3.1.11 (mrpConfigResetStatistics)

©2026 MICROSENS GmbH & Co. KG - Hamm/Germany - www.microsens.com

35.5 Ring Status Parameters

Group	**status**, for all ring indices [1..4]
Path	Protocol.Ring.status[index]
Description	Status values display the current condition of the ring network.

state

Values

UNUSED	Ring function is not enabled
NORMAL	Normal condition with no errors detected
BACKUP	A single error in the ring has occurred and is healed by the ring protection function. Communication continues
ERROR	Errors in the ring have been detected. These cannot be recovered. Possible communication loss
REMOTE_CONFIG_MISMATCH	The overall configuration of the ring across all involved units is incorrect

OID 1.3.6.1.4.1.3181.10.6.2.45.100.1.2 (statusState)

last_state_change

Time and date string indication when the state of the ring protocol has last changed to the state now indicated.

Value String, max. 32 characters.

OID 1.3.6.1.4.1.3181.10.6.2.45.100.1.3 (statusLastStateChange)

ring_interrupt

This indicates that at least one of the two ring ports is blocked. It is an OR of the port_a and port_b interrupt status fields. Note that the name may be misleading. Interrupted is to be understood as the port being actively blocked by the protocol to interrupt the traffic to prevent a network loop. This is part of normal operation.

Values true, false

OID 1.3.6.1.4.1.3181.10.6.2.45.100.1.4 (statusRingInterrupt)

global_ring_alarm

This indicates that somewhere in the overall ring a failure exists. It does not neccessarily indicate loss of data. Observe the overall state to determine this.

Values true, false

OID 1.3.6.1.4.1.3181.10.6.2.45.100.1.5 (statusGlobalRingAlarm)

error_detected

Applies to the ring master. Indicates that the master has detected an error on one of the ports.

Values true, false

OID 1.3.6.1.4.1.3181.10.6.2.45.100.1.6 (statusErrorDetected)

©2026 MICROSENS GmbH & Co. KG - Hamm/Germany - www.microsens.com

ring_port_a_interrupted	Indicates that ring port_a is blocked. See parameter ring_interrupt for details.		
	Values	true, false	
	OID	1.3.6.1.4.1.3181.10.6.2.45.100.1.7 (statusRingPortAInterrupted)	
ring_port_b_interrupted	Indicates that ring port_a is blocked. See parameter ring_interrupt for details.		
	Values	true, false	
	OID	1.3.6.1.4.1.3181.10.6.2.45.100.1.8 (statusRingPortBInterrupted)	
ring_port_a_neighbor	This field indicates problems associated with the device connect to ring port_a. The issue may be located in the connected device, not locally!		
	Values	*UNUSED*	Ring not enabled locally
		OK	No Ring configuration error detected
		LOCAL_LLDP_DISABLED	LLDP disabled locally
		WAITING_FOR_REMOTE_LLDP	No remote LLDP received but not yet in timeout. Timeout will result in next state.
		REMOTE_LLDP_DISABLED	LLDP disabled remotely
		ILLEGAL_DEVICE_DETECTED	Connected device which is not MICROSENS compatible and not a ring switch
		REMOTE_OLDER_FW_VERSION	Detection of device that should be updated to include this verification process. Further verification impossible. The setup may be correct otherwise.
		REMOTE_RING_DISBLED	Ring function not enabled at remote unit
		WRONG_REMOTE_PORT	Wrong port connected at remote site
		WRONG_REMOTE_RING_ID	Connected device with incompatible ring id
		DIFFERENT_PROTOCOL_VERSIONS	Different ring protocol version (for possible future changes)
		MULTIPLE_MASTER_ERROR	Detection of multiple ring masters. Detected by master only.
	OID	1.3.6.1.4.1.3181.10.6.2.45.100.1.9 (statusRingPortANeighbor)	

©2026 MICROSENS GmbH & Co. KG - Hamm/Germany - www.microsens.com

ring_port_b_neighbor	This field indicates problems associated with the device connect to ring port_b. The issue may be located in the connected device, not locally!		
	Values	*UNUSED*	Ring not enabled locally
		OK	No Ring configuration error detected
		LOCAL_LLDP_DISABLED	LLDP disabled locally
		WAITING_FOR_REMOTE_LLDP	No remote LLDP received but not yet in timeout. Timeout will result in next state.
		REMOTE_LLDP_DISABLED	LLDP disabled remotely
		ILLEGAL_DEVICE_DETECTED	Connected device which is not MICROSENS compatible and not a ring switch
		REMOTE_OLDER_FW_VERSION	Detection of device that should be updated to include this verification process. Further verification impossible. The setup may be correct otherwise.
		REMOTE_RING_DISBLED	Ring function not enabled at remote unit
		WRONG_REMOTE_PORT	Wrong port connected at remote site
		WRONG_REMOTE_RING_ID	Connected device with incompatible ring id
		DIFFERENT_PROTOCOL_VERSIONS	Different ring protocol version (for possible future changes)
		MULTIPLE_MASTER_ERROR	Detection of multiple ring masters. Detected by master only.
	OID	1.3.6.1.4.1.3181.10.6.2.45.100.1.10 (statusRingPortBNeighbor)	

Group	**statistics**, for all ring indices [1..4]
Path	Protocol.Ring.statistics[index]
Description	Statistics of the ring network performance.

number_of_backups	Counts the number of backups engaged since the last power up.	
	Value	Number in range 0-0xFFFFFFFF
	OID	1.3.6.1.4.1.3181.10.6.2.45.101.1.2 (statisticsNumberOfBackups)

©2026 MICROSENS GmbH & Co. KG - Hamm/Germany - www.microsens.com

current_backup_duration	Indicates since how long a currently active backup is established. When no backup is active a 0 is displayed. **Value** PERIOD0-0xFFFFFFFF **OID** 1.3.6.1.4.1.3181.10.6.2.45.101.1.3 (statisticsCurrentBackupDuration)
last_backup_duration	Indicates since how long the last backup was established. Indicates 0 if there was no backup since last reboot. **Value** PERIOD0-0xFFFFFFFF **OID** 1.3.6.1.4.1.3181.10.6.2.45.101.1.4 (statisticsLastBackupDuration)
total_backup_duration	Total time the ring was in backup since last reboot. **Value** PERIOD0-0xFFFFFFFF **OID** 1.3.6.1.4.1.3181.10.6.2.45.101.1.5 (statisticsTotalBackupDuration)

Group	**mrp_status**
Path	Protocol.Ring.mrp_status
Description	Status common to manager and client

operation	Indicates if MRP function is enabled. **Values** *DISABLED* MRP is disabled *ENABLED* MRP is enabled **OID** 1.3.6.1.4.1.3181.10.6.2.45.103.1.2 (mrpStatusOperation)
admin_role	Mirrors expected role configuration. **Values** *DISABLED* MRP is disabled *CLIENT* Client (slave) mode *MANAGER* Manager (master) node **OID** 1.3.6.1.4.1.3181.10.6.2.45.103.1.3 (mrpStatusAdminRole) 1.0.62439.1.1.1.4 (mrpDomainAdminRole)
operational_role	real_role ?? **Values** *DISABLED* MRP is disabled *CLIENT* Client (slave) mode *MANAGER* Manager (master) node **OID** 1.3.6.1.4.1.3181.10.6.2.45.103.1.4 (mrpStatusOperationalRole) 1.0.62439.1.1.1.5 (mrpDomainOperRole)

©2026 MICROSENS GmbH & Co. KG - Hamm/Germany - www.microsens.com

port_1_state

Values	*UNUSED*	MRP is disabled
	BLOCKING	Port is blocked. No communication. Ethernet LED indicates yellow.
	FORWARDING	Port is forwarding data
	NOT_CONNECTED	Port is not connected to network
OID	1.3.6.1.4.1.3181.10.6.2.45.103.1.5 (mrpStatusPort1State) 1.0.62439.1.1.1.7 (mrpDomainRingPort1State)	

port_2_state

Values	*UNUSED*	MRP is disabled
	BLOCKING	Port is blocked. No communication. Ethernet LED indicates yellow.
	FORWARDING	Port is forwarding data
	NOT_CONNECTED	Port is not connected to network
OID	1.3.6.1.4.1.3181.10.6.2.45.103.1.6 (mrpStatusPort2State) 1.0.62439.1.1.1.9 (mrpDomainRingPort2State)	

domain_id

When left blank the default id of all bits 1 is used.

Value	String, max. 65 characters.
OID	1.3.6.1.4.1.3181.10.6.2.45.103.1.7 (mrpStatusDomainId) 1.0.62439.1.1.1.2 (mrpDomainID)

domain_error

Values	*DISABLED*	MRP is disabled
	NO_ERROR	MRP is running and redundancy is available
	INVALID_VLAN	The configured VLAN is not permitted
	INVALID	General error code
	MULTI_MGR	Multiple managers in the ring
	SINGLE_SIDE	Test frames only received on one port
	LINK_ERROR	Link error
OID	1.3.6.1.4.1.3181.10.6.2.45.103.1.8 (mrpStatusDomainError) 1.0.62439.1.1.1.11 (mrpDomainError)	

Group	**mrp_manager_status**
Path	Protocol.Ring.mrp_manager_status
Description	Status that applies to manager only. Invalid when in client mode.

©2026 MICROSENS GmbH & Co. KG - Hamm/Germany - www.microsens.com

ring_state	Indicates of MRP is enabled on this device.		
	Values	*DISABLED*	MRP is disabled
		RING_CLOSED	MRP is running and redundancy is available
		RING_OPEN	Ring open. No redundancy at this time
		UNDEFINED	Undefined protocol state
	OID	1.3.6.1.4.1.3181.10.6.2.45.104.1.2 (mrpManagerStatusRingState) 1.0.62439.1.1.1.10 (mrpDomainState)	
manager_priority	The priority of this MRP entity.		
	Value	Number in range 0-0xFFFFFFFF	
	OID	1.3.6.1.4.1.3181.10.6.2.45.104.1.3 (mrpManagerStatusManagerPriority) 1.0.62439.1.1.1.14 (mrpDomainManagerPriority)	
ring_open_count	Counts how many times was the ring broken.		
	Value	Number in range 0-0xFFFFFFFF	
	OID	1.3.6.1.4.1.3181.10.6.2.45.104.1.4 (mrpManagerStatusRingOpenCount) 1.0.62439.1.1.1.15 (mrpDomainRingOpenCount)	
time_since_last_ring_open	Seconds since the ring was last opened.		
	Value	PERIOD0-0xFFFFFFFF	
	OID	1.3.6.1.4.1.3181.10.6.2.45.104.1.5 (mrpManagerStatusTimeSinceLastRingOpen) 1.0.62439.1.1.1.16 (mrpDomainLastRingOpenChange)	
max_round_trip_delay	The longest round trip delay that was measured since value reset. Value in microseconds		
	Value	Number in range 0-0xFFFFFFFF	
	OID	1.3.6.1.4.1.3181.10.6.2.45.104.1.6 (mrpManagerStatusMaxRoundTripDelay) 1.0.62439.1.1.1.17 (mrpDomainRoundTripDelayMax)	
min_round_trip_delay	The shortest round trip delay that was measured since value reset. Value in microseconds		
	Value	Number in range 0-0xFFFFFFFF	
	OID	1.3.6.1.4.1.3181.10.6.2.45.104.1.7 (mrpManagerStatusMinRoundTripDelay) 1.0.62439.1.1.1.18 (mrpDomainRoundTripDelayMin)	
topology_change_interval	Interval for sending of MRP_TopologyChange messages		
	Value	Number in range 0-65535	
	OID	1.3.6.1.4.1.3181.10.6.2.45.104.1.8 (mrpManagerStatusTopologyChangeInterval)	

©2026 MICROSENS GmbH & Co. KG - Hamm/Germany - www.microsens.com

topo_change_repeat_count	Topology change repeat count for repeated transmission of MRP_TopologyChange messages **Value** Number in range 0-65535 **OID** 1.3.6.1.4.1.3181.10.6.2.45.104.1.9 (mrpManagerStatusTopoChangeRepeatCount)
short_test_interval	Short interval for sending of MRP_Test messages after link changes on the ring **Value** Number in range 0-65535 **OID** 1.3.6.1.4.1.3181.10.6.2.45.104.1.10 (mrpManagerStatusShortTestInterval)
default_test_interval	Default interval for sending of MRP_Test messages on the ring **Value** Number in range 0-65535 **OID** 1.3.6.1.4.1.3181.10.6.2.45.104.1.11 (mrpManagerStatusDefaultTestInterval)
test_monitor_count	Count for monitoring the reception of MRP_Test messages **Value** Number in range 0-65535 **OID** 1.3.6.1.4.1.3181.10.6.2.45.104.1.12 (mrpManagerStatusTestMonitorCount)
test_monitor_ext_count	The extended interval count for monitoring the reception of MRP_Test messages **Value** Number in range 0-65535 **OID** 1.3.6.1.4.1.3181.10.6.2.45.104.1.13 (mrpManagerStatusTestMonitorExtCount)
nonblocking_support	False indicates that the manager requires ring clients that support port blocking. This is standard behavior of any modern switch. **Values** true, false **OID** 1.3.6.1.4.1.3181.10.6.2.45.104.1.14 (mrpManagerStatusNonblockingSupport)

Group	**mrp_client_status**
Path	Protocol.Ring.mrp_client_status
Description	Status that applies to client only. Invalid when in manager mode.
link_down_timer	The interval for sending of MRP_linkDown messages **Value** Number in range 0-65535 **OID** 1.3.6.1.4.1.3181.10.6.2.45.105.1.2 (mrpClientStatusLinkDownTimer)

©2026 MICROSENS GmbH & Co. KG - Hamm/Germany - www.microsens.com

link_up_timer	The interval for sending of MRP_linkUp messages **Value** Number in range 0-65535 **OID** 1.3.6.1.4.1.3181.10.6.2.45.105.1.3 (mrpClientStatusLinkUpTimer)
link_change_count	The count for repeated transmission of MRP_LinkChange messages **Value** Number in range 0-65535 **OID** 1.3.6.1.4.1.3181.10.6.2.45.105.1.4 (mrpClientStatusLinkChangeCount)
blocked_support	True indicates that this client supports port blocking. The value is always true. **Values** true, false **OID** 1.3.6.1.4.1.3181.10.6.2.45.105.1.5 (mrpClientStatusBlockedSupport) 1.0.62439.1.1.1.12 (mrpDomainBlocked)

©2026 MICROSENS GmbH & Co. KG - Hamm/Germany - www.microsens.com

36 Message Queue Telemetry Transport (MQTT)

36.1 Key Features

Auto publish actor, sensor and GUI data

Any changes to sensor or actor data of the entire SmartOffice system can automatically be published. Likewise, any GUI activity can be published. Features can be enabled individually.

This enables other systems to track SmartOffice activities in a very convienient way.

Auto subscribe actor, sensor and GUI data

Any sensor or actor data of the entire SmartOffice system can automatically be accessed. Likewise, the GUI can be remote controlled. Features can be enabled individually.

This enables other systems to remote control the SmartOffice System. It also permit for automatic sensor creation to incorporate foreign data.

Topic Map

MQTT data from other systems can be subscribed to and are automatically mapped to local SmartOffice sensors. Similarly, individual actor group changes can be published to control remote devices.

While auto publish provides a simple and generic way to interconnect with others, the topic map provides a detailed precise way to do so, while keeping other data obscure.

Configuration via MQTT

MQTT may be used to access any configuration parameter. Read and write access is supported. For security the feature canbe switched off or limited to read only. In addition user access rights of command level can be applied.

Configuration access via MQTT is a further step to permit full control of the system via MQTT.

Script Execution via MQTT

MicroScripts that already reside on the system can be executed via MQTT. Topic payload and extra topic elements are forwarded to the Script as parameters. The permitted scripts can precisely be defined.

Running a script via MQTT offers a flexible way to adapt a foreign system.

Local broker

Typically, a third party broker is accessed to transfer information. When such a broker is not available, a local broker can be provided.

In smaller application the embedded broker can suffice and may be used as the third party broker for other devices, saving cost for an extra device.

Encrypted broker

For security encryption broker connection are used featuring SSL with custom certificates etc.

Encrypted connection are used to ensure a third party cannot eavesdrop on the communication or can simulate a fake publisher.

©2026 MICROSENS GmbH & Co. KG - Hamm/Germany - www.microsens.com

Data Transformation

Often data are not available in a compatible format among several devices of different vendors. Transformation rules permit on-the-fly transformation and calculations to achieve uniform data representation.

Ensure data uniformity across vendors and interfaces.

Retain Flag

When a message it sent marked as retained then it is saved by the broker and retured to a new client upon connect, even if the originating device is not sending it again.

Support for the retain function of MQTT via table and script.

36.2 Functional Description

Preface

Message Queue Telemetry Transport (MQTT) is a recent protocol specially designed for the Internet of Things (IoT). In MQTT all data are referenced using topics. These look like directories.

For example: '*Frankfurt/MyBuilding/ground floor/room 1/lighting/desktop*'

The G6 fully supports MQTT being able to publish all SmartOffice functions and to subscribe to any kind of topic with translation to internal representation. Additionally, a broker (Server) is included to and from which other devices can connect.

Function

Small sensor devices can sent updates of their values to a central broker. The broker (server) keeps a record of all received messages. Other systems can register with the broker to receive updates of certain topics. In this way there is no direct connection between the end devices. The G6 can be setup to publish precisely defined objects (and hide all others) or may be setup to publish any changes to actors, sensors or groups. Additionally, any operation on the SmartOffice GUI (web page) can be forwarded. In this way the GUI could be used to control a completely separate device.

The G6 may also subscribe to topics from other devices. Since the topic structure is only loosely defined, a look up table is used to map topics to internal sensors. Once the sensor is defined, it can be used in the SmartOffice context, just like any other sensor data. The G6 may connect to any MQTT broker or use the local broker. Which scenario is better suited depends on the overall network design.

Security

Reliability is ensured by supported by allowing all three defined quality of service levels. Security is fully supported by optional AES256 encryption including the use of certificates. The internal broker supports username controlled topic access control lists.

For simple applications, or for easier testing, security features can be switched off.

Topics

In MQTT all data are referenced using topics. When G6 is publishing it needs to create topics. This done by combining a configurable prefix followed by the scheme '*prefix/device/instance/attribute*' for actors or sensors. For actor- or sensor groups the logic '*prefix/groupname/attribute*' is used.

To permit the deployment of several G6 devices in a SmartOffice network, while using the same configuration in each device, it is possible to use variables in the topic prefix.

Variables

These are:

©2026 MICROSENS GmbH & Co. KG - Hamm/Germany - www.microsens.com

Variable	Inserts
{SMO}	'SmartOffice' text
{MFG}	the manufacturer name (MICROSENS)
{MAC}	the MAC address of this device (using ':' separators)
{IP4}	the IPv4 address of this device
{IP6}	the first IPv6 address of this device (if IP V6 is enabled)
{DMN}	'*smartoffice.director_config.domain_name*'
{ART}	the article number of this device
{SER}	the serial number of this device
{LOC}	the SNMP SysLocation value
{NAM}	the SNMP SysName value

Several variables may be used in one topic like: {SMO}/{MFG}_{MAC}

This parameter expansion is available for:

- MQTT.publisher_config_topic_prefix
- MQTT.broker_access.client_id
- MQTT.topic_map.topic

Topic Wildcards

In MQTT it is possible to listen to any topic by using the wildcard '+' to do not care for a certain level such as '*floor/+/temperature*' to listen to the temperature in any room of this floor.

In the G6 this wildcard is NOT supported!

The wildcard may be specified to receive all elements from the server, but in the subsequent comparison using the topic_map to map to a particular internal sensor it does not make sense anymore. If let's say 5 rooms could publish data of interest, 5 distinct entries must be made.

Tip!

When setting up the configuration the precise topics to subscribe to may be unclear. In this situation it could be useful to use MQTT wildcards in the mapping table AND enable MQTT tracing '*MQTT.broker_access.trace_mode = Enabled*'.

This will display all incoming topics that match the wildcard. There will, however, be no update of any sensor. The display may be used to discover the exact topic to enter.

microScript

In general MQTT integrates into the SmartOffice system though actor and sensor emulation. This is detailed in this chapter. It may, however, also be useful to use MQTT under program control.

Through microScript it is also possible to publish and subscribe to topics. Subscribing via script has the advantage that wildcards may be used to receive an undetermined number of topics as compared to the straight 1:1 mapping of topic to sensor available via configuration. Configured and scripted MQTT operation may be used in parallel.

Further details about the microScript solution are available is a separate handbook.

©2026 MICROSENS GmbH & Co. KG - Hamm/Germany - www.microsens.com

36.3 MQTT CLI Command Reference

The following table lists all CLI commands applicable for this feature section. For each parameter, the access mode is given:

R = Read Only, R/W = Read/Write, X = Executable Action.

Please note that the effective access rights are dependent on the login level of the user.

Category	Group	Table	Parameter	Options	Access	Description
Protocol.						
	mqtt.					MQTT Internet of Things protocol.
			enable_mqtt		R/W	Master enable for all MQTT related functions.
			help_topic_variables		X	Displays useful information about topic expansion using curly brackets. Note that help is only displayed when MQTT is generally enabled.
		publisher_config.				This section defines outgoing messages published by this system to the outside world.
			enable_publishing		R/W	Master enable for publishing function. When enabled outgoing MQTT messages indicating the changes according to the selected smart office elements will be generated.
			topic_prefix		R/W	This prefix is prepended to all outgoing topics. Any valid string may be used. Trailing slash is optional. Any number of levels may be specified. The system will append in the following logic: prefix/device/instance/attribute for individual actor/sensors and in this format for groups: prefix/groupname/attribute or prefix/gui/gui_element. Topic variable expansion is available. Additional information available with mqtt.help_topic_variables command. Variables may by used like location/{MAC}/subtopic.
			quality_of_service		R/W	This defines the QoS with which the publish_all.. elements are published. Actors published through the topic_map use their own local QoS setting.
			publish_all_actorgroups		R/W	When enabled any changes to any actor_group are reported.
			publish_all_sensorgroups		R/W	When enabled any changes to any sensor_group are reported.
			publish_all_actors		R/W	When enabled any changes to any actor are reported. This can create a significant amount of traffic. Usually it is preferred to only publish actorgroup changes.
			publish_all_sensors		R/W	When enabled any changes from any sensor are reported. This can create a significant amount of traffic. Usually it is preferred to only publish sensorgroup changes.
			publish_gui_elements		R/W	When enabled any GUI activity of elements for which the parameter remote_accessible is enabled is reported. NOTE: For now the remote_accessible is ignored and all activities are reported.

©2026 MICROSENS GmbH & Co. KG - Hamm/Germany - www.microsens.com

set_retain_flag	R/W	When enabled all of the publish_all_.. messages will have the retain flag set, causing the last value to be stored in the broker. This can cause high memory requirements on the broker. Only select when required.
subscriber_config.		This section defines reaction to incoming messages not defined in the topic map.
enable_subscription	R/W	Master enable for subscription function. When enabled incoming MQTT messages matching the following topics will be accepted. This is independent from specific definitions defined by the topic map. It is intended when the system is generally MQTT controlled to avoid the requirement for a very large topic map.
match_topic_prefix	R/W	When a topic starting with the defined prefix is received, then the next keyword is used to select actor, actorgroup, sensor or gui. For additional syntax check the individual subscription enable text. The wildcard + is permitted in the match topic. Topic variable expansion is available. Additional information available with mqtt.help_topic_variables command. Variables may by used like location/{MAC}/subtopic.
quality_of_service	R/W	This QoS defines with which level the match_topic is subscribed.
subscribe_all_actorgroups	R/W	When enabled actor groups can be set via MQTT. Format: match_topic_prefix/actorgroup/groupname (using default priority 10) or match_topic_prefix/actorgroup/groupname/attribute/priority. Only use priority format if fully understood. Send empty double quotes to release a priority level. 1is highest, 32 lowest priority. Standard is 10.
subscribe_all_actors	R/W	When enabled individual actors can be set via MQTT provided thy are not part of any actor group. Format: match_topic_prefix/actor/device/instance/attribute.
permit_actor_creation	R/W	When enabled, incoming actor_topics that specify an actor that does not already exist in the system will automatically be created. This simplifies adding new external data sources but also implies the danger that to many actors (due to incorrect or rouge data) could be created filling up the actor table.
subscribe_gui_elements	R/W	When enabled individual gui elements can be set via MQTT. A possible associated script as defined in the gui configuration is executed as well. Format: match_topic_prefix/gui/gui_element/instance/attribute.
subscribe_all_sensors	R/W	When enabled any sensor value can be set via MQTT. Format: match_topic_prefix/sensor/device/instance/attribute.
permit_sensor_creation	R/W	When enabled, incoming sensor_topics that specify a sensor that does not already exist in the system will automatically be created. This simplifies adding new external data sources but also implies the danger that to many sensors (due to incorrect or rouge data) could be created filling up the sensor table.
limit_to_mqtt_sensors	R/W	When enabled, only sensor that were initially created by MQTT can be set. This way MQTT cannot be (mis)used to overwrite the values of other sensors.

©2026 MICROSENS GmbH & Co. KG - Hamm/Germany - www.microsens.com

event_command_access	R/W	When enabled, internal system events used to register SmartOffice elements are exposed. This permits, for example, fully integrated device drivers via MQTT.
run_script_access	R/W	When enabled, scripts can be run via MQTT. The script must already reside on the system. Command line parameter can be used via topic or payload. The script access rights are governed by the mqtt_cfg_username.
permitted_scripts	R/W	When run_script_access is enabled, this field can be used to limit the available scripts to protect the system. Wildcards can be used. Enter * to permit any script. When subroutines are used, follow the script name with * to permit all subroutines of file. The more precise the name, the more secure. Also observe possible app names prepended to the script name.
configuration_access	R/W	Depending on the setting it is possible to see and/or modify the configuration of the system via MQTT. This is very powerful but also potentially dangerous. Therefore, this option should be used with care. Observe the associated parameter mqtt_cfg_username. This must also be configured to define which access restrictions apply.
mqtt_cfg_username	R/W	The access restrictions defined for the selected user also apply for access via MQTT. When no username or an invalid user name is configured, MQTT configuration access is blocked.
topic_map[DYNAMIC].		This table is used to map topics to local names that fit into the SmartOffice naming scheme. No wildcards are permitted. This table permits publishing of individual actors, rather then publishing all. Also this table is used to receive well defined topics and make them internally available as sensors or variables or to directly execute a script. Note the parameter defined in subscriber_config table like topic_prefix, mqtt_only or limited sensor creation do NOT apply to the topic map. This permits precise definition without compromizing security when global subscriptions are used in parallel.
name	R/W	Unique name to reference this entry and to remember its functionality.
mode	R/W	Defines whether the topic is subscribed to and mapped to local name or if an existing local name is published. The entry may be disabled to turn off all activity without loosing the mapping information.
topic	R/W	Unique name of the element. {xxx} expansion as shown in mqtt.help_topic_variables command may be used here. Wildcards + or # cannot be used. No additional topic_prefix applies. The topic must be complete.

©2026 MICROSENS GmbH & Co. KG - Hamm/Germany - www.microsens.com

	local_name	R/W	For mode=SUBSCRIBE: reference the GUI element (gui_list) or sensor name (sensor_list) to receive data into. If the name does not exist a new sensor is created. When the local_name starts with $ a persistent variable is used as receiver. if the variable does not exist, it is created. Define /scriptfile:subroutine to directly call a microScript upon topic reception. Note this should not be used if rapid topic execution is expected. In this case use a sensor and sensorgroup with appended script. For mode=PUBLISH the name of an actor_group or sensor_group can be specified which is reported according to the group settings for run_script. Alternatively, the local_name can be an actor (from actor_list) or a GUI element (gui_list). In both modes the sensor/actor name must be in the format: device:instance:attribute. Example: mqtt:1:temperature.
	transformation	R/W	May be used to transform the value between external and internal format. The transformation is applied before the local name is written. Syntax: text=value,text=value or value=text or text=other_text,.. Or calculations: =$*10 Example C to F: =($*1.8)+32
	quality_of_service	R/W	This QoS defines with which level the subscriber subscribes or with which QoS is published.
broker_access.			This section defines all connectivity and security aspects between this system and the MQTT broker. This applies regardless of the fact that a local or remote broker is used.
	broker_address	R/W	IP address or symbolic name of the MQTT broker. When empty the local broker is used. Use broker:port syntax to specifiy a particular TCP port. Defaults to 1883 for non-security mode and 8883 for SSL modes.
	fallback_address	R/W	IP address or symbolic name of a backup MQTT broker only to be used when the primary broker is unavailable. Syntax: address[:port] [,other_server:port] . Several fallback brokers can be defined with comma separated list. The same credentials are used for primary and all fallback connections.
	client_id	R/W	The client id is used by the broker to verify permissions to access topics. An empty field will use a random id which will only allow access to unprotected brokers. The expanded client id can be up to 127 characters but may be cut off after 23 characters by the broker according to MQTT 3.1 protocol specification. Topic expansion as shown with mqtt.help_topic_variables command applies.
	security_mode	R/W	Define the security method to apply for all messages. Use SSL for encrypted messaging.
	username	R/W	The username is optional and will be added to outgoing messages if set.
	enter_password	X	Set a password for the user. No spaces are permitted.
	encrypted_password	R/W	This holds the encrypted password. Do not modify.

©2026 MICROSENS GmbH & Co. KG - Hamm/Germany - www.microsens.com

	ca_filename	R/W	Name of a file containing the PEM encoded trusted CA certificate files.Only used in SSL mode.
	certificate_filename	R/W	The certificate file must be located in public certification folder. Only used in SSL mode.
	key_filename	R/W	PEM encoded private key. The key file must be located in public certification folder. Only used in SSL mode.
	enter_key_password	X	Set private key password if encrypted key file is specified. Note: trailing spaces or multiple spaces in the password are automatically removed. Only used in SSL mode.
	encrypted_key_password	R/W	The encrypted private key password. Can be set with enter_private_key_password action.
	verify_server_certificate	R/W	When enabled the certificate of the broker is checked for validity. Only used in SSL mode.
	pre_shared_key	R/W	Pre-shared-key in hex format with no leading "0x". Only used in PSK mode.
	psk_identity	R/W	Identiy or user name string. Only used in PSK mode.
	keep_alive_timer	R/W	The system will periodically send keep alive messages when the value is not 0. The time is specified in seconds.
	trace_mode	R/W	For testing a trace mode may be enabled that displays MQTT activity to the console for quick trouble shooting.
local_broker_config.			This section only applies if this system should also provide the broker. It may be accessed by remote and local clients.
	enable_local_broker	R/W	Run a local MQTT broker on port 1883 and secure port 8883. Also websocket on port 9001 is available.
	permit_anonymous	R/W	Permit access without any username. This should be used for initial testing only!
	permit_insecure_sessions	R/W	Permit access using standard MQTT port 1883. When disabled only SSL encrypted connections on port 8883 are permitted by the local broker.
	ca_filename	R/W	Name of a file containing the PEM encoded trusted CA certificate files.
	certificate_filename	R/W	The certificate file must be located in public certification folder.
	key_filename	R/W	PEM encoded private key. The key file must be located in public certification folder.
	require_client_certificate	R/W	When enabled a connecting client must present a valid certificate or the connection is dropped.
local_broker_user[DYNAMIC].			Define user/password pairs to protect access to the broker. The username can further be used to restrict access to certain topics.
	username	R/W	Define a username to protect access to the broker. Must be 3 character at least. Remeber to disable local_broker_config.permit_anonymous to force password verfication.
	enter_password	X	Set a password for the user. No spaces and no : are permitted.
	encrypted_password	R/W	This holds the encrypted password. Do not modify.

©2026 MICROSENS GmbH & Co. KG - Hamm/Germany - www.microsens.com

	permitted_topic	R/W	Wildcards as per MQTT are permitted here. Use # for the remainder of the topic and /+/ to create a wildcard for a section. At this time only one topic is configurable. Use the pattern table for more granularity.
	topic_access	R/W	Define the allowed access method of the permitted topic.
	acl_list	R/W	Contains the names of local_broker_acl name entries that apply to this user separated by commas. Please beware of typing errors. Default value full-access provides full read and write access. Replace this entry with more restricted acls when needed.
local_broker_acl[DYNAMIC].			The access control list can be used to enable topic access. The acl names must be associated to a certain user to become effective.
	name	R/W	Unique name to reference this entry and to remember its function.
	permitted_topic	R/W	Wildcards as per MQTT are permitted here. In addition the terms /%c/ may be used to specify the current client_id and /%u/ can be used to specify current user. Use # for the remainder of the topic and /+/ to create a wildcard for a section.
	topic_access	R/W	Define the allowed access method of the permitted topic.
bridge_config[DYNAMIC].			This section permits to setup broker to broker bridging. The local broker may connect to up to 4 other brokers. All bridges are maintained in parallel and each bridge can have a fallback address. IMPORTANT: Any changes to the bridge config only apply after MQTT has been disabled/enabled.
	name	R/W	connection name of MQTT bridge
	local_username	R/W	The username to access the local broker. May be omitted when permit_anonymous is enabled.
	enter_local_password	X	Set a password to access the local broker. No spaces are permitted.
	encrypted_local_pwd	R/W	This holds the encrypted password. Do not modify.
	remote_address	R/W	IP address or symbolic name of a remote MQTT broker. Syntax: address[:port] optional port. For IPv6 the port number must be included. If the remote address field is empty, the entire bridge definition for this name entry is ignored.
	fallback_address	R/W	IP address or symbolic name of a backup remote MQTT broker only to be used when the primary broker is unavailable. Syntax: address[:port] optional port. The same credentials are used for primary and falllback connections.
	client_id	R/W	The client id is used by the remote broker to verify permissions to access topics. An empty field will use a default id which will only allow access to unprotected brokers. The expanded client id can be up to 127 characters but may be cut off after 23 characters by the broker according to MQTT 3.1 protocol specification. Topic expansion as shown with mqtt.help_topic_variables command applies.

©2026 MICROSENS GmbH & Co. KG - Hamm/Germany - www.microsens.com

remote_username	R/W	The username is optional and will be added to outgoing messages if set.
enter_remote_password	W	Set a password for the user. No spaces are permitted.
encrypted_remote_pwd	R/W	This holds the encrypted password. Do not modify.
bridge_security_mode	R/W	Define the security method to apply for all messages.
ca_filename	R/W	Name of a file containing the PEM encoded trusted CA certificate files.Only used in SSL mode.
certificate_filename	R/W	The certificate file must be located in public certification folder. Only used in SSL mode.
key_filename	R/W	PEM encoded private key. The key file must be located in public certification folder. Only used in SSL mode.
enter_key_password	W	Set private key password if encrypted key file is specified. Note: trailing spaces or multiple spaces in the password are automatically removed. Only used in SSL mode.
encrypted_key_password	R/W	The encrypted private key password. Can be set with enter_private_key_password action.
pre_shared_key	R/W	Pre-shared-key in hex format with no leading "0x". Only used in PSK mode.
psk_identity	R/W	Identiy or user name string. Only used in PSK mode.
connection_mode	R/W	Determines how long the broker connection is held active.
out_match_pattern	R/W	Define a topic pattern to be shared between the two brokers. Any topics matching the pattern (which may include wildcards) are shared
out_local_topic_prefix	R/W	The bridge will prepend the out_match_pattern with the local prefix and subscribe to the resulting topic on the local broker. Topic variables may be used.
out_remote_topic_prefix	R/W	When an outgoing message is processed, the out_local_topic_prefix will be exchanged with the out_remote_topic_prefix defined here. Topic variables may be used.
out_qos	R/W	Quality of service used for the outgoing topics.
in_match_pattern	R/W	Define a topic pattern to be shared between the two brokers. Any topics matching the pattern (which may include wildcards) are shared. Topic variables may be used.
in_local_topic_prefix	R/W	When a matching incoming message is received, the in_remote_topic_prefix will be removed from the topic and then the in_local_topic_prefix is added. Topic variables may be used.
in_remote_topic_prefix	R/W	For incoming topics, the bridge will prepend the in_match_pattern with the in_remote_topic_prefix and subscribe to the resulting topic on the remote broker. Topic variables may be used.
in_qos	R/W	Quality of service used for the incoming topics.

©2026 MICROSENS GmbH & Co. KG - Hamm/Germany - www.microsens.com

monitor.			The controls an independen MQTT monitor that can subscribe to all topics and permits further filtering and data display. The monitor uses colors to visualize data intended to be consumed by this device or send out to another one.
	enable_monitor	R/W	The monitor uses the same broker and credentials are configured under broker_access section. It is advisable to open a new CLI just to run the monitor in.
	match_pattern_in	R/W	The monitor can match only to specific data or very global. This topic pattern should match topics intended to be consumed by this device. Further filtering is provided with the filter parameter.
	topic_filter_in	R/W	The filter applies to all matched topics to futher filter out specific messages. This pattern is matched against incoming topics. Note that this is a textual filter using * and ? as wild card pattern!
	payload_filter_in	R/W	The filter applies to all incoming messages that have passed the previous two filters. It permits to look for specific data in the payload of the matched messages. Note that this is a textual filter using * and ? as wild card pattern!
	match_pattern_out	R/W	The monitor can match only to specific data or very global. This topic pattern should match topics outgoing from this device. Leave this entry empty if the distinction between incoming and going coloring is not required. Further filtering is provided with the filter parameter.
	topic_filter_out	R/W	The filter applies to all matched outgoing topics to futher filter out specific messages. Note that this is a textual filter using * and ? as wild card pattern!
	payload_filter_out	R/W	The filter applies to all outgoing messages that have passed the previous two filters. It permits to look for specific data in the payload of the matched messages. Note that this is a textual filter using * and ? as wild card pattern!
	display_timestamp	R/W	When enabled the time of reception is displayed.
	display_payload	R/W	When enabled the payload is displayed (if possible) It may be cut off indicated by a tilde.
	suppress_events	R/W	When enabled most other CLI messages that disturb monitoring are supressed while the monitor is active. Use in combination with a separate CLI for monitoring.
	write_logfile	R/W	When enabled the captured data are ALSO written to a logfile located in ftp accessible folder script_logs. Automatic name creation.

©2026 MICROSENS GmbH & Co. KG - Hamm/Germany - www.microsens.com

36.4 MQTT Configuration Parameters

Group	**General Parameters**
Path	Protocol.MQTT

enable_mqtt	Master enable for all MQTT related functions.	
	Values	enabled, disabled
	OID	1.3.6.1.4.1.3181.10.6.2.110.1 (mqttEnableMqtt)
help_topic_variables	Displays useful information about topic expansion using curly brackets. Note that help is only displayed when MQTT is generally enabled.	
	Action	Excecute command.
	OID	1.3.6.1.4.1.3181.10.6.2.110.2 (mqttHelpTopicVariables)

Group	**topic_map**, dynamical size
Path	Protocol.MQTT.topic_map
Description	This table is used to map topics to local names that fit into the SmartOffice naming scheme. No wildcards are permitted. This table permits publishing of individual actors, rather then publishing all. Also this table is used to receive well defined topics and make them internally available as sensors or variables or to directly execute a script. Note the parameter defined in subscriber_config table like topic_prefix, mqtt_only or limited sensor creation do NOT apply to the topic map. This permits precise definition without compromizing security when global subscriptions are used in parallel.

name	Unique name to reference this entry and to remember its functionality.		
	Value	String, max. 32 characters.	
	OID	1.3.6.1.4.1.3181.10.6.2.110.5.1.2 (topicMapName)	
mode	Defines whether the topic is subscribed to and mapped to local name or if an existing local name is published. The entry may be disabled to turn off all activity without loosing the mapping information.		
	Values	*DISABLED*	This entry is ignored
		SUBSCRIBE	The topic is subscribed too (received)
		PUBLISH	The topic is published (send)
		PUBLISH_RETAINED	The topic is published (send) and retained in broker
	OID	1.3.6.1.4.1.3181.10.6.2.110.5.1.3 (topicMapMode)	

©2026 MICROSENS GmbH & Co. KG - Hamm/Germany - www.microsens.com

topic	Unique name of the element. {xxx} expansion as shown in mqtt.help_topic_variables command may be used here. Wildcards + or # cannot be used. No additional topic_prefix applies. The topic must be complete. **Value** String, max. 128 characters. **OID** 1.3.6.1.4.1.3181.10.6.2.110.5.1.4 (topicMapTopic)
local_name	For mode=SUBSCRIBE: reference the GUI element (gui_list) or sensor name (sensor_list) to receive data into. If the name does not exist a new sensor is created. When the local_name starts with $ a persistent variable is used as receiver. if the variable does not exist, it is created. Define /scriptfile:subroutine to directly call a microScript upon topic reception. Note this should not be used if rapid topic execution is expected. In this case use a sensor and sensorgroup with appended script. For mode=PUBLISH the name of an actor_group or sensor_group can be specified which is reported according to the group settings for run_script. Alternatively, the local_name can be an actor (from actor_list) or a GUI element (gui_list). In both modes the sensor/actor name must be in the format: device:instance:attribute. Example: mqtt:1:temperature. **Value** String, max. 64 characters. **OID** 1.3.6.1.4.1.3181.10.6.2.110.5.1.5 (topicMapLocalName)
transformation	May be used to transform the value between external and internal format. The transformation is applied before the local name is written. Syntax: text=value,text=value or value=text or text=other_text,.. Or calculations: =$*10 Example C to F: =($*1.8)+32 **Value** String, max. 128 characters. **OID** 1.3.6.1.4.1.3181.10.6.2.110.5.1.6 (topicMapTransformation)
quality_of_service	This QoS defines with which level the subscriber subscribes or with which QoS is published. **Values** *AT_MOST_ONCE* Unacknowledged transfer *AT_LEAST_ONCE* Acknowledged transfer *EXACTLY_ONCE* Acknowledged transfer. Safest but slowest. **OID** 1.3.6.1.4.1.3181.10.6.2.110.5.1.7 (topicMapQualityOfService)

Group	**local_broker_user**, dynamical size
Path	Protocol.MQTT.local_broker_user
Description	Define user/password pairs to protect access to the broker. The username can further be used to restrict access to certain topics.

©2026 MICROSENS GmbH & Co. KG - Hamm/Germany - www.microsens.com

username	Define a username to protect access to the broker. Must be 3 character at least. Remeber to disable local_broker_config.permit_anonymous to force password verfication. **Value** String, max. 32 characters. **OID** 1.3.6.1.4.1.3181.10.6.2.110.8.1.2 (localBrokerUserUsername)
enter_password	Set a password for the user. No spaces and no : are permitted. **Action** Excecute command with parameter string max. 64 characters. **OID** 1.3.6.1.4.1.3181.10.6.2.110.8.1.3 (localBrokerUserEnterPassword)
encrypted_password	This holds the encrypted password. Do not modify. **Value** String, max. 128 characters. **OID** 1.3.6.1.4.1.3181.10.6.2.110.8.1.4 (localBrokerUserEncryptedPassword)
permitted_topic	Wildcards as per MQTT are permitted here. Use # for the remainder of the topic and /+/ to create a wildcard for a section. At this time only one topic is configurable. Use the pattern table for more granularity. ATTENTION: Not implemented. **Value** String, max. 128 characters. **OID** 1.3.6.1.4.1.3181.10.6.2.110.8.1.5 (localBrokerUserPermittedTopic)
topic_access	Define the allowed access method of the permitted topic. ATTENTION: Not implemented. **Values** *SUBSCRIBE* The topic may be subscribed too *PUBLISH* The topic may be published *FULL* The topic may be read and written **OID** 1.3.6.1.4.1.3181.10.6.2.110.8.1.6 (localBrokerUserTopicAccess)
acl_list	Contains the names of local_broker_acl name entries that apply to this user separated by commas. Please beware of typing errors. Default value full-access provides full read and write access. Replace this entry with more restricted acls when needed. ATTENTION: Not implemented. **Value** String, max. 128 characters. **OID** 1.3.6.1.4.1.3181.10.6.2.110.8.1.7 (localBrokerUserAclList)

©2026 MICROSENS GmbH & Co. KG - Hamm/Germany - www.microsens.com

Group	**local_broker_acl**, dynamical size
Path	Protocol.MQTT.local_broker_acl
Description	The access control list can be used to enable topic access. The acl names must be associated to a certain user to become effective.

name	Unique name to reference this entry and to remember its function.		
	Value	String, max. 32 characters.	
	OID	1.3.6.1.4.1.3181.10.6.2.110.9.1.2 (localBrokerAclName)	
permitted_topic	Wildcards as per MQTT are permitted here. In addition the terms /%c/ may be used to specify the current client_id and /%u/ can be used to specify current user. Use # for the remainder of the topic and /+/ to create a wildcard for a section.		
	Value	String, max. 128 characters.	
	OID	1.3.6.1.4.1.3181.10.6.2.110.9.1.3 (localBrokerAclPermittedTopic)	
topic_access	Define the allowed access method of the permitted topic.		
	Values	*SUBSCRIBE*	The topic may be subscribed too
		PUBLISH	The topic may be published
		FULL	The topic may be read and written
	OID	1.3.6.1.4.1.3181.10.6.2.110.9.1.4 (localBrokerAclTopicAccess)	

Group	**bridge_config**, dynamical size
Path	Protocol.MQTT.bridge_config
Description	This section permits to setup broker to broker bridging. The local broker may connect to up to 4 other brokers. All bridges are maintained in parallel and each bridge can have a fallback address. IMPORTANT: Any changes to the bridge config only apply after MQTT has been disabled/enabled.

name	connection name of MQTT bridge	
	Value	String, max. 32 characters.
	OID	1.3.6.1.4.1.3181.10.6.2.110.10.1.2 (bridgeConfigName)
local_username	The username to access the local broker. May be omitted when permit_anonymous is enabled.	
	Value	String, max. 32 characters.
	OID	1.3.6.1.4.1.3181.10.6.2.110.10.1.3 (bridgeConfigLocalUsername)

©2026 MICROSENS GmbH & Co. KG - Hamm/Germany - www.microsens.com

enter_local_password	Set a password to access the local broker. No spaces are permitted. **Action** Excecute command with parameter string max. 64 characters. **OID** 1.3.6.1.4.1.3181.10.6.2.110.10.1.4 (bridgeConfigEnterLocalPassword)
encrypted_local_pwd	This holds the encrypted password. Do not modify. **Value** String, max. 128 characters. **OID** 1.3.6.1.4.1.3181.10.6.2.110.10.1.5 (bridgeConfigEncryptedLocalPwd)
remote_address	IP address or symbolic name of a remote MQTT broker. Syntax: address[:port] optional port. For IPv6 the port number must be included. If the remote address field is empty, the entire bridge definition for this name entry is ignored. **Value** String, max. 128 characters. **OID** 1.3.6.1.4.1.3181.10.6.2.110.10.1.6 (bridgeConfigRemoteAddress)
fallback_address	IP address or symbolic name of a backup remote MQTT broker only to be used when the primary broker is unavailable. Syntax: address[:port] optional port. The same credentials are used for primary and falllback connections. **Value** String, max. 128 characters. **OID** 1.3.6.1.4.1.3181.10.6.2.110.10.1.7 (bridgeConfigFallbackAddress)
client_id	The client id is used by the remote broker to verify permissions to access topics. An empty field will use a default id which will only allow access to unprotected brokers. The expanded client id can be up to 127 characters but may be cut off after 23 characters by the broker according to MQTT 3.1 protocol specification. Topic expansion as shown with mqtt.help_topic_variables command applies. **Value** String, max. 128 characters. **OID** 1.3.6.1.4.1.3181.10.6.2.110.10.1.8 (bridgeConfigClientId)
remote_username	The username is optional and will be added to outgoing messages if set. **Value** String, max. 32 characters. **OID** 1.3.6.1.4.1.3181.10.6.2.110.10.1.9 (bridgeConfigRemoteUsername)
enter_remote_password	Set a password for the user. No spaces are permitted. **Action** Excecute command with parameter string max. 64 characters. **OID** 1.3.6.1.4.1.3181.10.6.2.110.10.1.10 (bridgeConfigEnterRemotePassword)

©2026 MICROSENS GmbH & Co. KG - Hamm/Germany - www.microsens.com

encrypted_remote_pwd	This holds the encrypted password. Do not modify. **Value** String, max. 128 characters. **OID** 1.3.6.1.4.1.3181.10.6.2.110.10.1.11 (bridgeConfigEncryptedRemotePwd)
bridge_security_mode	Define the security method to apply for all messages. **Values** *NONE* No encryption is used *SSL_TLS* Use SSL encryption with certification file. *PSK_TLS* Use pre-shared-key based TLS support **OID** 1.3.6.1.4.1.3181.10.6.2.110.10.1.12 (bridgeConfigBridgeSecurityMode)
ca_filename	Name of a file containing the PEM encoded trusted CA certificate files.Only used in SSL mode. **Value** String, max. 32 characters. **OID** 1.3.6.1.4.1.3181.10.6.2.110.10.1.13 (bridgeConfigCaFilename)
certificate_filename	The certificate file must be located in public certification folder. Only used in SSL mode. **Value** String, max. 32 characters. **OID** 1.3.6.1.4.1.3181.10.6.2.110.10.1.14 (bridgeConfigCertificateFilename)
key_filename	PEM encoded private key. The key file must be located in public certification folder. Only used in SSL mode. **Value** String, max. 32 characters. **OID** 1.3.6.1.4.1.3181.10.6.2.110.10.1.15 (bridgeConfigKeyFilename)
enter_key_password	Set private key password if encrypted key file is specified. Note: trailing spaces or multiple spaces in the password are automatically removed. Only used in SSL mode. **Action** Excecute command with parameter string max. 128 characters. **OID** 1.3.6.1.4.1.3181.10.6.2.110.10.1.16 (bridgeConfigEnterKeyPassword)
encrypted_key_password	The encrypted private key password. Can be set with enter_private_key_password action. **Value** String, max. 128 characters. **OID** 1.3.6.1.4.1.3181.10.6.2.110.10.1.17 (bridgeConfigEncryptedKeyPassword)

©2026 MICROSENS GmbH & Co. KG - Hamm/Germany - www.microsens.com

pre_shared_key	Pre-shared-key in hex format with no leading "0x". Only used in PSK mode. **Value** String, max. 40 characters. **OID** 1.3.6.1.4.1.3181.10.6.2.110.10.1.18 (bridgeConfigPreSharedKey)
psk_identity	Identiy or user name string. Only used in PSK mode. **Value** String, max. 32 characters. **OID** 1.3.6.1.4.1.3181.10.6.2.110.10.1.19 (bridgeConfigPskIdentity)
connection_mode	Determines how long the broker connection is held active. **Values** *ALWAYS* The bridge connection is always maintained *ON_DEMAND* The bridge connects when data need to be send and disconnects after 1 minute of idle **OID** 1.3.6.1.4.1.3181.10.6.2.110.10.1.20 (bridgeConfigConnectionMode)
out_match_pattern	Define a topic pattern to be shared between the two brokers. Any topics matching the pattern (which may include wildcards) are shared **Value** String, max. 128 characters. **OID** 1.3.6.1.4.1.3181.10.6.2.110.10.1.21 (bridgeConfigOutMatchPattern)
out_local_topic_prefix	The bridge will prepend the out_match_pattern with the local prefix and subscribe to the resulting topic on the local broker. Topic variables may be used. **Value** String, max. 128 characters. **OID** 1.3.6.1.4.1.3181.10.6.2.110.10.1.22 (bridgeConfigOutLocalTopicPrefix)
out_remote_topic_prefix	When an outgoing message is processed, the out_local_topic_prefix will be exchanged with the out_remote_topic_prefix defined here. Topic variables may be used. **Value** String, max. 128 characters. **OID** 1.3.6.1.4.1.3181.10.6.2.110.10.1.23 (bridgeConfigOutRemoteTopicPrefix)
out_qos	Quality of service used for the outgoing topics. **Values** *AT_MOST_ONCE* Unacknowledged transfer *AT_LEAST_ONCE* Acknowledged transfer *EXACTLY_ONCE* Acknowledged transfer. Safest but slowest. **OID** 1.3.6.1.4.1.3181.10.6.2.110.10.1.24 (bridgeConfigOutQos)

©2026 MICROSENS GmbH & Co. KG - Hamm/Germany - www.microsens.com

in_match_pattern	Define a topic pattern to be shared between the two brokers. Any topics matching the pattern (which may include wildcards) are shared. Topic variables may be used. **Value** String, max. 128 characters. **OID** 1.3.6.1.4.1.3181.10.6.2.110.10.1.25 (bridgeConfigInMatchPattern)
in_local_topic_prefix	When a matching incoming message is received, the in_remote_topic_prefix will be removed from the topic and then the in_local_topic_prefix is added. Topic variables may be used. **Value** String, max. 128 characters. **OID** 1.3.6.1.4.1.3181.10.6.2.110.10.1.26 (bridgeConfigInLocalTopicPrefix)
in_remote_topic_prefix	For incoming topics, the bridge will prepend the in_match_pattern with the in_remote_topic_prefix and subscribe to the resulting topic on the remote broker. Topic variables may be used. **Value** String, max. 128 characters. **OID** 1.3.6.1.4.1.3181.10.6.2.110.10.1.27 (bridgeConfigInRemoteTopicPrefix)
in_qos	Quality of service used for the incoming topics. **Values** *AT_MOST_ONCE* Unacknowledged transfer *AT_LEAST_ONCE* Acknowledged transfer *EXACTLY_ONCE* Acknowledged transfer. Safest but slowest. **OID** 1.3.6.1.4.1.3181.10.6.2.110.10.1.28 (bridgeConfigInQos)

Group	**publisher_config**
Path	Protocol.MQTT.publisher_config
Description	This section defines outgoing messages published by this system to the outside world.

enable_publishing	Master enable for publishing function. When enabled outgoing MQTT messages indicating the changes according to the selected smart office elements will be generated. **Values** enabled, disabled **OID** 1.3.6.1.4.1.3181.10.6.2.110.3.1.2 (publisherConfigEnablePublishing)

©2026 MICROSENS GmbH & Co. KG - Hamm/Germany - www.microsens.com

topic_prefix	This prefix is prepended to all outgoing topics. Any valid string may be used. Trailing slash is optional. Any number of levels may be specified. The system will append in the following logic: prefix/device/instance/attribute for individual actor/sensors and in this format for groups: prefix/groupname/attribute or prefix/gui/gui_element. Topic variable expansion is available. Additional information available with mqtt.help_topic_variables command. Variables may by used like location/{MAC}/subtopic. **Value** String, max. 128 characters. **OID** 1.3.6.1.4.1.3181.10.6.2.110.3.1.3 (publisherConfigTopicPrefix)
quality_of_service	This defines the QoS with which the publish_all.. elements are published. Actors published through the topic_map use their own local QoS setting. **Values** *AT_MOST_ONCE* Unacknowledged transfer *AT_LEAST_ONCE* Acknowledged transfer *EXACTLY_ONCE* Acknowledged transfer. Safest but slowest. **OID** 1.3.6.1.4.1.3181.10.6.2.110.3.1.4 (publisherConfigQualityOfService)
publish_all_actorgroups	When enabled any changes to any actor_group are reported. **Values** enabled, disabled **OID** 1.3.6.1.4.1.3181.10.6.2.110.3.1.5 (publisherConfigPublishAllActorgroups)
publish_all_sensorgroups	When enabled any changes to any sensor_group are reported. **Values** enabled, disabled **OID** 1.3.6.1.4.1.3181.10.6.2.110.3.1.6 (publisherConfigPublishAllSensorgroups)
publish_all_actors	When enabled any changes to any actor are reported. This can create a significant amount of traffic. Usually it is preferred to only publish actorgroup changes. **Values** enabled, disabled **OID** 1.3.6.1.4.1.3181.10.6.2.110.3.1.7 (publisherConfigPublishAllActors)
publish_all_sensors	When enabled any changes from any sensor are reported. This can create a significant amount of traffic. Usually it is preferred to only publish sensorgroup changes. **Values** enabled, disabled **OID** 1.3.6.1.4.1.3181.10.6.2.110.3.1.8 (publisherConfigPublishAllSensors)

©2026 MICROSENS GmbH & Co. KG - Hamm/Germany - www.microsens.com

publish_gui_elements	When enabled any GUI activity of elements for which the parameter remote_accessible is enabled is reported. NOTE: For now the remote_accessible is ignored and all activities are reported. **Values** enabled, disabled **OID** 1.3.6.1.4.1.3181.10.6.2.110.3.1.9 (publisherConfigPublishGuiElements)
set_retain_flag	When enabled all of the publish_all_.. messages will have the retain flag set, causing the last value to be stored in the broker. This can cause high memory requirements on the broker. Only select when required. **Values** enabled, disabled **OID** 1.3.6.1.4.1.3181.10.6.2.110.3.1.10 (publisherConfigSetRetainFlag)

Group	**subscriber_config**
Path	Protocol.MQTT.subscriber_config
Description	This section defines reaction to incoming messages not defined in the topic map.

enable_subscription	Master enable for subscription function. When enabled incoming MQTT messages matching the following topics will be accepted. This is independent from specific definitions defined by the topic map. It is intended when the system is generally MQTT controlled to avoid the requirement for a very large topic map. **Values** enabled, disabled **OID** 1.3.6.1.4.1.3181.10.6.2.110.4.1.2 (subscriberConfigEnableSubscription)
match_topic_prefix	When a topic starting with the defined prefix is received, then the next keyword is used to select actor, actorgroup, sensor or gui. For additional syntax check the individual subscription enable text. The wildcard + is permitted in the match topic. Topic variable expansion is available. Additional information available with mqtt.help_topic_variables command. Variables may by used like location/{MAC}/subtopic. **Value** String, max. 128 characters. **OID** 1.3.6.1.4.1.3181.10.6.2.110.4.1.3 (subscriberConfigMatchTopicPrefix)
quality_of_service	This QoS defines with which level the match_topic is subscribed. **Values** *AT_MOST_ONCE* Unacknowledged transfer *AT_LEAST_ONCE* Acknowledged transfer *EXACTLY_ONCE* Acknowledged transfer. Safest but slowest. **OID** 1.3.6.1.4.1.3181.10.6.2.110.4.1.4 (subscriberConfigQualityOfService)

©2026 MICROSENS GmbH & Co. KG - Hamm/Germany - www.microsens.com

subscribe_all_actorgroups	When enabled actor groups can be set via MQTT. Format: match_topic_prefix/actorgroup/groupname (using default priority 10) or match_topic_prefix/actorgroup/groupname/attribute/priority. Only use priority format if fully understood. Send empty double quotes to release a priority level. 1is highest, 32 lowest priority. Standard is 10. **Values** enabled, disabled **OID** 1.3.6.1.4.1.3181.10.6.2.110.4.1.5 (subscriberConfigSubscribeAllActorgroups)
subscribe_all_actors	When enabled individual actors can be set via MQTT provided thy are not part of any actor group. Format: match_topic_prefix/actor/device/instance/attribute. **Values** enabled, disabled **OID** 1.3.6.1.4.1.3181.10.6.2.110.4.1.6 (subscriberConfigSubscribeAllActors)
permit_actor_creation	When enabled, incoming actor_topics that specify an actor that does not already exist in the system will automatically be created. This simplifies adding new external data sources but also implies the danger that to many actors (due to incorrect or rouge data) could be created filling up the actor table. **Values** enabled, disabled **OID** 1.3.6.1.4.1.3181.10.6.2.110.4.1.7 (subscriberConfigPermitActorCreation)
subscribe_gui_elements	When enabled individual gui elements can be set via MQTT. A possible associated script as defined in the gui configuration is executed as well. Format: match_topic_prefix/gui/gui_element/instance/attribute. **Values** enabled, disabled **OID** 1.3.6.1.4.1.3181.10.6.2.110.4.1.8 (subscriberConfigSubscribeGuiElements)
subscribe_all_sensors	When enabled any sensor value can be set via MQTT. Format: match_topic_prefix/sensor/device/instance/attribute. **Values** enabled, disabled **OID** 1.3.6.1.4.1.3181.10.6.2.110.4.1.9 (subscriberConfigSubscribeAllSensors)
permit_sensor_creation	When enabled, incoming sensor_topics that specify a sensor that does not already exist in the system will automatically be created. This simplifies adding new external data sources but also implies the danger that to many sensors (due to incorrect or rouge data) could be created filling up the sensor table. **Values** enabled, disabled **OID** 1.3.6.1.4.1.3181.10.6.2.110.4.1.10 (subscriberConfigPermitSensorCreation)

©2026 MICROSENS GmbH & Co. KG - Hamm/Germany - www.microsens.com

limit_to_mqtt_sensors	When enabled, only sensor that were initially created by MQTT can be set. This way MQTT cannot be (mis)used to overwrite the values of other sensors. **Values** enabled, disabled **OID** 1.3.6.1.4.1.3181.10.6.2.110.4.1.11 (subscriberConfigLimitToMqttSensors)
event_command_access	When enabled, internal system events used to register SmartOffice elements are exposed. This permits, for example, fully integrated device drivers via MQTT. **Values** enabled, disabled **OID** 1.3.6.1.4.1.3181.10.6.2.110.4.1.12 (subscriberConfigEventCommandAccess)
run_script_access	When enabled, scripts can be run via MQTT. The script must already reside on the system. Command line parameter can be used via topic or payload. The script access rights are governed by the mqtt_cfg_username. **Values** enabled, disabled **OID** 1.3.6.1.4.1.3181.10.6.2.110.4.1.13 (subscriberConfigRunScriptAccess)
permitted_scripts	When run_script_access is enabled, this field can be used to limit the available scripts to protect the system. Wildcards can be used. Enter * to permit any script. When subroutines are used, follow the script name with * to permit all subroutines of file. The more precise the name, the more secure. Also observe possible app names prepended to the script name. **Value** String, max. 128 characters. **OID** 1.3.6.1.4.1.3181.10.6.2.110.4.1.14 (subscriberConfigPermittedScripts)
configuration_access	Depending on the setting it is possible to see and/or modify the configuration of the system via MQTT. This is very powerful but also potentially dangerous. Therefore, this option should be used with care. Observe the associated parameter mqtt_cfg_username. This must also be configured to define which access restrictions apply. **Values** *DISABLED* No configuration access via MQTT *READ_ONLY* Configuration and status is read only via MQTT *READ_WRITE* Full access to configuration and status **OID** 1.3.6.1.4.1.3181.10.6.2.110.4.1.15 (subscriberConfigConfigurationAccess)
mqtt_cfg_username	The access restrictions defined for the selected user also apply for access via MQTT. When no username or an invalid user name is configured, MQTT configuration access is blocked. **Value** String, max. 32 characters. **OID** 1.3.6.1.4.1.3181.10.6.2.110.4.1.16 (subscriberConfigMqttCfgUsername)

©2026 MICROSENS GmbH & Co. KG - Hamm/Germany - www.microsens.com

Group	**broker_access**
Path	Protocol.MQTT.broker_access
Description	This section defines all connectivity and security aspects between this system and the MQTT broker. This applies regardless of the fact that a local or remote broker is used.

broker_address

IP address or symbolic name of the MQTT broker. When empty the local broker is used. Use broker:port syntax to specifiy a particular TCP port. Defaults to 1883 for non-security mode and 8883 for SSL modes.

Value String, max. 128 characters.

OID 1.3.6.1.4.1.3181.10.6.2.110.6.1.2 (brokerAccessBrokerAddress)

fallback_address

IP address or symbolic name of a backup MQTT broker only to be used when the primary broker is unavailable. Syntax: address[:port][,other_server:port] . Several fallback brokers can be defined with comma separated list. The same credentials are used for primary and all fallback connections.

Value String, max. 128 characters.

OID 1.3.6.1.4.1.3181.10.6.2.110.6.1.3 (brokerAccessFallbackAddress)

client_id

The client id is used by the broker to verify permissions to access topics. An empty field will use a random id which will only allow access to unprotected brokers. The expanded client id can be up to 127 characters but may be cut off after 23 characters by the broker according to MQTT 3.1 protocol specification. Topic expansion as shown with mqtt.help_topic_variables command applies.

Value String, max. 128 characters.

OID 1.3.6.1.4.1.3181.10.6.2.110.6.1.4 (brokerAccessClientId)

security_mode

Define the security method to apply for all messages. Use SSL for encrypted messaging.

Values

NONE	No encryption is used
SSL_TLS	Use SSL encryption with certification file.
PSK_TLS	Use pre-shared-key based TLS support

OID 1.3.6.1.4.1.3181.10.6.2.110.6.1.5 (brokerAccessSecurityMode)

username

The username is optional and will be added to outgoing messages if set.

Value String, max. 32 characters.

OID 1.3.6.1.4.1.3181.10.6.2.110.6.1.6 (brokerAccessUsername)

©2026 MICROSENS GmbH & Co. KG - Hamm/Germany - www.microsens.com

enter_password	Set a password for the user. No spaces are permitted. **Action** Excecute command with parameter string max. 64 characters. **OID** 1.3.6.1.4.1.3181.10.6.2.110.6.1.7 (brokerAccessEnterPassword)
encrypted_password	This holds the encrypted password. Do not modify. **Value** String, max. 128 characters. **OID** 1.3.6.1.4.1.3181.10.6.2.110.6.1.8 (brokerAccessEncryptedPassword)
ca_filename	Name of a file containing the PEM encoded trusted CA certificate files.Only used in SSL mode. **Value** String, max. 32 characters. **OID** 1.3.6.1.4.1.3181.10.6.2.110.6.1.9 (brokerAccessCaFilename)
certificate_filename	The certificate file must be located in public certification folder. Only used in SSL mode. **Value** String, max. 32 characters. **OID** 1.3.6.1.4.1.3181.10.6.2.110.6.1.10 (brokerAccessCertificateFilename)
key_filename	PEM encoded private key. The key file must be located in public certification folder. Only used in SSL mode. **Value** String, max. 32 characters. **OID** 1.3.6.1.4.1.3181.10.6.2.110.6.1.11 (brokerAccessKeyFilename)
enter_key_password	Set private key password if encrypted key file is specified. Note: trailing spaces or multiple spaces in the password are automatically removed. Only used in SSL mode. **Action** Excecute command with parameter string max. 128 characters. **OID** 1.3.6.1.4.1.3181.10.6.2.110.6.1.12 (brokerAccessEnterKeyPassword)
encrypted_key_password	The encrypted private key password. Can be set with enter_private_key_password action. **Value** String, max. 128 characters. **OID** 1.3.6.1.4.1.3181.10.6.2.110.6.1.13 (brokerAccessEncryptedKeyPassword)
verify_server_certificate	When enabled the certificate of the broker is checked for validity. Only used in SSL mode. **Values** enabled, disabled **OID** 1.3.6.1.4.1.3181.10.6.2.110.6.1.14 (brokerAccessVerifyServerCertificate)

©2026 MICROSENS GmbH & Co. KG - Hamm/Germany - www.microsens.com

pre_shared_key	Pre-shared-key in hex format with no leading "0x". Only used in PSK mode. **Value** String, max. 40 characters. **OID** 1.3.6.1.4.1.3181.10.6.2.110.6.1.15 (brokerAccessPreSharedKey)
psk_identity	Identiy or user name string. Only used in PSK mode. **Value** String, max. 32 characters. **OID** 1.3.6.1.4.1.3181.10.6.2.110.6.1.16 (brokerAccessPskIdentity)
keep_alive_timer	The system will periodically send keep alive messages when the value is not 0. The time is specified in seconds. **Value** Number in range 0-0xFFFFFFFF **OID** 1.3.6.1.4.1.3181.10.6.2.110.6.1.17 (brokerAccessKeepAliveTimer)
trace_mode	For testing a trace mode may be enabled that displays MQTT activity to the console for quick trouble shooting. **Values** enabled, disabled **OID** 1.3.6.1.4.1.3181.10.6.2.110.6.1.18 (brokerAccessTraceMode)

Group	**local_broker_config**
Path	Protocol.MQTT.local_broker_config
Description	This section only applies if this system should also provide the broker. It may be accessed by remote and local clients.

enable_local_broker	Run a local MQTT broker on port 1883 and secure port 8883. Also websocket on port 9001 is available. **Values** enabled, disabled **OID** 1.3.6.1.4.1.3181.10.6.2.110.7.1.2 (localBrokerConfigEnableLocalBroker)
permit_anonymous	Permit access without any username. This should be used for initial testing only! **Values** enabled, disabled **OID** 1.3.6.1.4.1.3181.10.6.2.110.7.1.3 (localBrokerConfigPermitAnonymous)
permit_insecure_sessions	Permit access using standard MQTT port 1883. When disabled only SSL encrypted connections on port 8883 are permitted by the local broker. **Values** enabled, disabled **OID** 1.3.6.1.4.1.3181.10.6.2.110.7.1.4 (localBrokerConfigPermitInsecureSessions)

©2026 MICROSENS GmbH & Co. KG - Hamm/Germany - www.microsens.com

ca_filename	Name of a file containing the PEM encoded trusted CA certificate files. **Value** String, max. 32 characters. **OID** 1.3.6.1.4.1.3181.10.6.2.110.7.1.5 (localBrokerConfigCaFilename)
certificate_filename	The certificate file must be located in public certification folder. **Value** String, max. 32 characters. **OID** 1.3.6.1.4.1.3181.10.6.2.110.7.1.6 (localBrokerConfigCertificateFilename)
key_filename	PEM encoded private key. The key file must be located in public certification folder. **Value** String, max. 32 characters. **OID** 1.3.6.1.4.1.3181.10.6.2.110.7.1.7 (localBrokerConfigKeyFilename)
require_client_certificate	When enabled a connecting client must present a valid certificate or the connection is dropped. **Values** enabled, disabled **OID** 1.3.6.1.4.1.3181.10.6.2.110.7.1.8 (localBrokerConfigRequireClientCertificate)

Group	**monitor**
Path	Protocol.MQTT.monitor
Description	The controls an independen MQTT monitor that can subscribe to all topics and permits further filtering and data display. The monitor uses colors to visualize data intended to be consumed by this device or send out to another one.

enable_monitor	The monitor uses the same broker and credentials are configured under broker_access section. It is advisable to open a new CLI just to run the monitor in. ATTENTION: Not implemented. **Values** enabled, disabled **OID** 1.3.6.1.4.1.3181.10.6.2.110.11.1.2 (monitorEnableMonitor)
match_pattern_in	The monitor can match only to specific data or very global. This topic pattern should match topics intended to be consumed by this device. Further filtering is provided with the filter parameter. **Value** String, max. 128 characters. **OID** 1.3.6.1.4.1.3181.10.6.2.110.11.1.3 (monitorMatchPatternIn)

©2026 MICROSENS GmbH & Co. KG - Hamm/Germany - www.microsens.com

topic_filter_in	The filter applies to all matched topics to futher filter out specific messages. This pattern is matched against incoming topics. Note that this is a textual filter using * and ? as wild card pattern! **Value** String, max. 128 characters. **OID** 1.3.6.1.4.1.3181.10.6.2.110.11.1.4 (monitorTopicFilterIn)
payload_filter_in	The filter applies to all incoming messages that have passed the previous two filters. It permits to look for specific data in the payload of the matched messages. Note that this is a textual filter using * and ? as wild card pattern! **Value** String, max. 32 characters. **OID** 1.3.6.1.4.1.3181.10.6.2.110.11.1.5 (monitorPayloadFilterIn)
match_pattern_out	The monitor can match only to specific data or very global. This topic pattern should match topics outgoing from this device. Leave this entry empty if the distinction between incoming and going coloring is not required. Further filtering is provided with the filter parameter. **Value** String, max. 128 characters. **OID** 1.3.6.1.4.1.3181.10.6.2.110.11.1.6 (monitorMatchPatternOut)
topic_filter_out	The filter applies to all matched outgoing topics to futher filter out specific messages. Note that this is a textual filter using * and ? as wild card pattern! **Value** String, max. 128 characters. **OID** 1.3.6.1.4.1.3181.10.6.2.110.11.1.7 (monitorTopicFilterOut)
payload_filter_out	The filter applies to all outgoing messages that have passed the previous two filters. It permits to look for specific data in the payload of the matched messages. Note that this is a textual filter using * and ? as wild card pattern! **Value** String, max. 32 characters. **OID** 1.3.6.1.4.1.3181.10.6.2.110.11.1.8 (monitorPayloadFilterOut)
display_timestamp	When enabled the time of reception is displayed. **Values** enabled, disabled **OID** 1.3.6.1.4.1.3181.10.6.2.110.11.1.9 (monitorDisplayTimestamp)
display_payload	When enabled the payload is displayed (if possible) It may be cut off indicated by a tilde. **Values** enabled, disabled **OID** 1.3.6.1.4.1.3181.10.6.2.110.11.1.10 (monitorDisplayPayload)

©2026 MICROSENS GmbH & Co. KG - Hamm/Germany - www.microsens.com

suppress_events	When enabled most other CLI messages that disturb monitoring are supressed while the monitor is active. Use in combination with a separate CLI for monitoring. **Values** enabled, disabled **OID** 1.3.6.1.4.1.3181.10.6.2.110.11.1.11 (monitorSuppressEvents)
write_logfile	When enabled the captured data are ALSO written to a logfile located in ftp accessible folder script_logs. Automatic name creation. **Values** enabled, disabled **OID** 1.3.6.1.4.1.3181.10.6.2.110.11.1.12 (monitorWriteLogfile)

©2026 MICROSENS GmbH & Co. KG - Hamm/Germany - www.microsens.com

37 Modbus

37.1 Functional Description

Preface

The Modbus/TCP industrial communications protocol. Often used with SCADA and PLC applications.

©2026 MICROSENS GmbH & Co. KG - Hamm/Germany - www.microsens.com

37.2 Modbus CLI Command Reference

The following table lists all CLI commands applicable for this feature section. For each parameter, the access mode is given:

R = Read Only, R/W = Read/Write, X = Executable Action.

Please note that the effective access rights are dependent on the login level of the user.

Category	Group	Table	Parameter	Options	Access	Description
Protocol.						
	modbus.					Modbus industrial communications protocol often used with SCADA and PLC applications.
			enable_modbus		R/W	Master enable for all Modbus TCP related functions.
		device_config[DYNAMIC].				This dynamic table is used to specify access parameter to one or more Modbus devices.
			name		R/W	Unique name used to identify the Modbus device. This name is referenced in the mapping tables.
			address		R/W	IP address or symbolic name of the Modbus device. IPv4 or IPv6 address may be specified.
			tcp_port		R/W	TCP port for Modbus IP connection. Standard port is 502.
			device_id		R/W	The device_id can be used to address sub-devices. Usually, the broadcast id 255 or a 1 should be selected.
			trace_mode		R/W	For testing a trace mode may be enabled that displays Modbus activity for this device to the console for trouble shooting.
		element_map[DYNAMIC].				This table is used to map Modbus data to local names that fit into the SmartOffice naming scheme.
			name		R/W	Unique name to reference this entry and to remember its functionality.
			mode		R/W	Defines whether the register or element is read from the device and mapped to local name or if the value of an existing local name is written to the device. The entry may be disabled to turn off all activity without loosing the mapping information.
			device		R/W	The device name must exactly match the defined name of the device as defined in previous table.
			type		R/W	This entry defines which type of data are accessed which in turn defines the modbus function code to be used.

©2026 MICROSENS GmbH & Co. KG - Hamm/Germany - www.microsens.com

address	R/W	Coil or register address to be mapped. Value may be decimal or hex using 0xFF syntax. Careful, do not use leading 0 for decimal values or octal representation is expected.
length	R/W	Number of elements of requested type to be transferred. When multiple elements are transferred, the data are stored comma separated in one local element. The maximum length may be limited by the receiving data buffer and the selected formatting. A length of 0 skips the entry. For floating point or 32 bit values a length of 1 writes 2 registers (4 bytes).
poll_rate	R/W	The entry will be refreshed with the polling rate specified here. Same rate applies to writes. For writes only, the rate ON_CHANGE may be selected, which limits write to only when the local value has changed.
local_name	R/W	When the value is left empty, the data are only written to the element_data table or taken from there for write mode. When used, this defines the sensor list entry that is generated and linked to this element for read mode. In write mode the name of an existing actor or a new virtual actor is required. In both cases the name must be in the format: device:instance:attribute. Example: modbus_device: 1:temperature. Alternative a persistent variable can be assigned starting with $. Such variables can be used directly in microScript.
format	R/W	Since Modbus has no method to convey information about the data type this field allows to specify the best way to display the data. In combination with the unit parameter for example a meaningless value can be converted to easily understood value before further processing.
transformation	R/W	May be used to transform the value between external and internal format. Syntax: text=value,text=value or value=text or text=other_text,.. Or calculations: =$*10 Example C to F: =($*1.8)+32. Use # to append a unit to the value. Also in combination with calculation like: $/1000#mW. For more options please refer to separate documentation. Note: Transformation is applied after format was applied.

©2026 MICROSENS GmbH & Co. KG - Hamm/Germany - www.microsens.com

	manual_set_value	X	This command permits setting of the element_data value manually bypassing any internal script logic. The value is remains unchanged until the next manual write or any internal write to the element_data memory. Note: when a local_name is defined for an entry it has precedence and this action is meaningless.
device_status[16].			Summarizes the status of each configured Modbus device.
	name	R	Unique name for reference. This correlates to the configured name.
	operational_state	R	Indicates the operational state of the device. Device (not attribute) specific errors will be indicated here.
	error_message	R	Contains the last error message related to the current state.
	number_of_reads	R	Increments with every successful read message. This relates to one entry in the map.
	number_of_read_errors	R	Increments with every unsuccessful read attempt. Error counter are reset when the device disconnects.
	number_of_writes	R	Increments with every successful write message. This relates to one entry in the map.
	number_of_write_errors	R	Increments with every unsuccessful write attempt. Error counter are reset when the device disconnects.
element_data[128].			Array of string variables that can be written and read by scripts. Several scripts may share data in these variables. The variables may also be accessed via SNMP.
	name	R	Copy of the element name as configured in element_map.
	operation_mode	R	Indicates the operational mode defined for this entry.
	state	R	Indicates the operational state of this particular element entry.
	error_message	R	Contains an error message if an error condition is pending.
	number_of_updates	R	Increments every time this record is updated by reading the device or accessed to write data to the device.
	last_update	R	Indicates the time when this entry was last updated or read or last accessed when writing to device.
	value	R	For read elements this contains the received and formatted data. For elements that write to modbus, this contains a copy of the formatted data to be send out. Usually the send data are created programmatically but may also be set using the .manual_set_value action.

©2026 MICROSENS GmbH & Co. KG - Hamm/Germany - www.microsens.com

37.3 Modbus Configuration Parameters

Group	**General Parameters**
Path	Protocol.Modbus

enable_modbus	Master enable for all Modbus TCP related functions. **Values** enabled, disabled **OID** 1.3.6.1.4.1.3181.10.6.2.114.1 (modbusEnableModbus)

Group	**device_config**, dynamical size
Path	Protocol.Modbus.device_config
Description	This dynamic table is used to specify access parameter to one or more Modbus devices.

name	Unique name used to identify the Modbus device. This name is referenced in the mapping tables. **Value** String, max. 32 characters. **OID** 1.3.6.1.4.1.3181.10.6.2.114.2.1.2 (deviceConfigName)
address	IP address or symbolic name of the Modbus device. IPv4 or IPv6 address may be specified. **Value** String, max. 128 characters. **OID** 1.3.6.1.4.1.3181.10.6.2.114.2.1.3 (deviceConfigAddress)
tcp_port	TCP port for Modbus IP connection. Standard port is 502. **Value** Number in range 0-65535 **OID** 1.3.6.1.4.1.3181.10.6.2.114.2.1.4 (deviceConfigTcpPort)
device_id	The device_id can be used to address sub-devices. Usually, the broadcast id 255 or a 1 should be selected. **Value** Number in range 0-255 **OID** 1.3.6.1.4.1.3181.10.6.2.114.2.1.5 (deviceConfigDeviceId)
trace_mode	For testing a trace mode may be enabled that displays Modbus activity for this device to the console for trouble shooting. **Values** enabled, disabled **OID** 1.3.6.1.4.1.3181.10.6.2.114.2.1.6 (deviceConfigTraceMode)

©2026 MICROSENS GmbH & Co. KG - Hamm/Germany - www.microsens.com

Group	**element_map**, dynamical size
Path	Protocol.Modbus.element_map
Description	This table is used to map Modbus data to local names that fit into the SmartOffice naming scheme.

name

Unique name to reference this entry and to remember its functionality.

Value String, max. 32 characters.

OID 1.3.6.1.4.1.3181.10.6.2.114.3.1.2 (elementMapName)

mode

Defines whether the register or element is read from the device and mapped to local name or if the value of an existing local name is written to the device. The entry may be disabled to turn off all activity without loosing the mapping information.

Values

DISABLED	This entry is ignored
READ	The coil or memory is read (received)
WRITE	The coil or memory is written (send)

OID 1.3.6.1.4.1.3181.10.6.2.114.3.1.3 (elementMapMode)

device

The device name must exactly match the defined name of the device as defined in previous table.

Value String, max. 32 characters.

OID 1.3.6.1.4.1.3181.10.6.2.114.3.1.4 (elementMapDevice)

type

This entry defines which type of data are accessed which in turn defines the modbus function code to be used.

Values

COIL	One bit coil may be read or written. Boolean value. (FC01)
DISCRETE_INPUT	One bit input is read only. Boolean value. (FC02)
INPUT_REGISTER	16 bit value is read only (FC03)
HOLDING_REGISTER	16 bit value is read and writeable (FC04)

OID 1.3.6.1.4.1.3181.10.6.2.114.3.1.5 (elementMapType)

address

Coil or register address to be mapped. Value may be decimal or hex using 0xFF syntax. Careful, do not use leading 0 for decimal values or octal representation is expected.

Value Number in range 0-0xFFFFFFFF

OID 1.3.6.1.4.1.3181.10.6.2.114.3.1.6 (elementMapAddress)

length

Number of elements of requested type to be transferred. When multiple elements are transferred, the data are stored comma separated in one local element. The maximum length may be limited by the receiving data buffer and the selected formatting. A length of 0 skips the entry. For floating point or 32 bit values a length of 1 writes 2 registers (4 bytes).

Value Number in range 0-65535

OID 1.3.6.1.4.1.3181.10.6.2.114.3.1.7 (elementMapLength)

©2026 MICROSENS GmbH & Co. KG - Hamm/Germany - www.microsens.com

poll_rate	The entry will be refreshed with the polling rate specified here. Same rate applies to writes. For writes only, the rate ON_CHANGE may be selected, which limits write to only when the local value has changed. **Values** *ON_CHANGE* Only applied to write mode. Update modbus device only when local actor value changes. *POLL_250MS* Poll 4 times per second *POLL_500MS* Poll twice per second *POLL_1000MS* Poll every second *POLL_5000MS* Poll every 5 seconds **OID** 1.3.6.1.4.1.3181.10.6.2.114.3.1.8 (elementMapPollRate)
local_name	When the value is left empty, the data are only written to the element_data table or taken from there for write mode. When used, this defines the sensor list entry that is generated and linked to this element for read mode. In write mode the name of an existing actor or a new virtual actor is required. In both cases the name must be in the format: device:instance:attribute. Example: modbus_device:1:temperature. Alternative a persistent variable can be assigned starting with $. Such variables can be used directly in microScript. **Value** String, max. 64 characters. **OID** 1.3.6.1.4.1.3181.10.6.2.114.3.1.9 (elementMapLocalName)

©2026 MICROSENS GmbH & Co. KG - Hamm/Germany - www.microsens.com

format

Since Modbus has no method to convey information about the data type this field allows to specify the best way to display the data. In combination with the unit parameter for example a meaningless value can be converted to easily understood value before further processing.

Values

RAW	Values are stored as they are received
BOOL	Null is false, anything else is true
UNSIGNED	Non-negative 16bit decimal number
SIGNED	Signed decimal 16bit number
STRING	Treat bytes as string and append termination 0 if required.
HEX_PACKED	Encode every byte into 2 chars representing a hex value. No spaces between bytes. E.g.: 7EAC
HEX_LIST	Encode every byte into 4 chars representing a hex value comma separated. E.G.: 0x7E,0xAC
FLOAT_ABCD	Four successive byte are treated as floating point value. Note the byte order to match the device.
FLOAT_BADC	Four successive byte are treated as floating point value. Note the byte order to match the device.
FLOAT_CDAB	Four successive byte are treated as floating point value. Note the byte order to match the device.
FLOAT_DCBA	Four successive byte are treated as floating point value. Note the byte order to match the device.
UNSIGNED32_BIG	Non-negative 32bit decimal number in big endian format
UNSIGNED32_LTL	Non-negative 32bit decimal number in little endian format
SIGNED32_BIG	Signed 32bit decimal number in big endian format
SIGNED32_LTL	Signed 32bit decimal number in little endian format

OID 1.3.6.1.4.1.3181.10.6.2.114.3.1.10 (elementMapFormat)

transformation

May be used to transform the value between external and internal format. Syntax: text=value,text=value or value=text or text=other_text,.. Or calculations: =$*10 Example C to F: =($*1.8)+32. Use # to append a unit to the value. Also in combination with calculation like: $/1000#mW. For more options please refer to separate documentation. Note: Transformation is applied after format was applied.

Value String, max. 128 characters.

OID 1.3.6.1.4.1.3181.10.6.2.114.3.1.11 (elementMapTransformation)

©2026 MICROSENS GmbH & Co. KG - Hamm/Germany - www.microsens.com

manual_set_value	This command permits setting of the element_data value manually bypassing any internal script logic. The value is remains unchanged until the next manual write or any internal write to the element_data memory. Note: when a local_name is defined for an entry it has precedence and this action is meaningless. **Action** Excecute command with parameter string max. 1024 characters. **OID** 1.3.6.1.4.1.3181.10.6.2.114.3.1.12 (elementMapManualSetValue)

©2026 MICROSENS GmbH & Co. KG - Hamm/Germany - www.microsens.com

37.4 Modbus Status Parameters

©2026 MICROSENS GmbH & Co. KG - Hamm/Germany - www.microsens.com

38 Frequently Asked Questions

Q: How do I assign an IP address to the switch?

There are different ways to assign an initial IP address.

NMP Autodiscovery

The Network Management Platform provides a simple mechanism to detect and configure MICROSENS switches, called 'MAC Discovery'.

As this function works on the Ethernet-Layer, the switch to be configured must be directly connected to the Ethernet segment the PC running NMP is attached to.

Before starting the procedure, check the interface setting in the 'Application settings' and select the correct host network interface. NMP has to be restarted before the new setting is applied.

By pressing the 'MAC Discovery' button in the toolbar, a window with a list of the detected devices opens. If the switch to be configured is not displayed, please check the NMP application host interface settings again. If the switch is in an unknown state, it may be helpful to execute a reset to factory defaults by pressing the factory button for more than 20 sec.

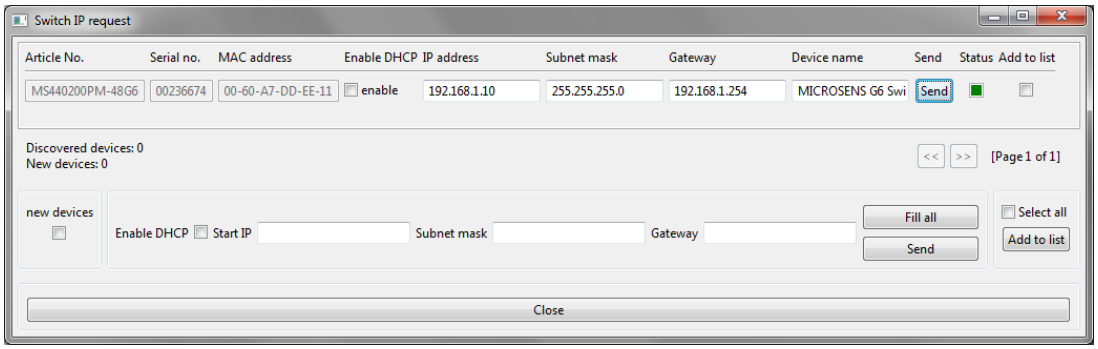

Now the IP settings of the switch can be entered. By pressing the 'Send' button, these settings are applied to the device. If the settings were applied successfully, the Status box left to the send button turns green.

The new IP settings take effect immediately, no reset of the device is required. Now the switch can be accessed with the IP settings assigned.

> ***INFO:*** *NMP is a separate product developed and licensed by MICROSENS. For productive use in networks, a commecial license is required. For configuring single devices, an evaluation license can be used free of charge. Please contact MICROSENS sales team for further information about NMP.*

DHCP

By factory default, the switch IP stack is configured for dynamic IP address assignment via DHCP (Dynamic Host Configuration Protocol). Connecting the switch to a network with a running DHCP server should automatically provide the device with a valid IP address. Under this address the switch management can be accessed.

©2026 MICROSENS GmbH & Co. KG - Hamm/Germany - www.microsens.com

Q: How do I update the firmware of a switch?

The firmware of the switch is stored in a single archive file on the memory card. Such a firmware file can include a full image, to replace all files including the Linux Kernel, or an incremental update, including only the files affected by changes. All update files contain an individual script file that installs the included files to the right locations. So a firmware update requires basically just two steps: transfer the update file and start the update script. This procedure can be executed via different interfaces:

Firmware update via CLI

Before the update file can be transferred to the switch, the appropriate file transfer server must be activated on the device. File Transfer to and from the switch can be done via TFTP, FTP and SFTP. To enable the intended server, the corresponding parameter must be enabled via CLI. '*Management.Files.server.ftp_server = Enabled*' activates the FTP server. Using an external FTP tool (e.g. 'Filezilla' from Mozilla foundation), the firmware update file can be downloaded on the switch.

After successful download, the file availability can be checked via '*Management.Files.firmware.display_files*' command. Now the update can be installed by executing the command '*Management.Files.firmware.install_software_update = filename*'. The script file executed will provide feedback about the operation. After the execution, the update is installed. In most cases no reboot is required.

Firmware Update via NMP

The Network Management Platform is a separate tool to facilitate the configuration, administration and management of MICROSENS switches. By right-clicking on the device to be updated in the device list, the option 'firmware update' can be selected. Now the firmware file to be installed can be selected. The firmware is then automatically transferred to the device and installed. The status is shown in a separate window.

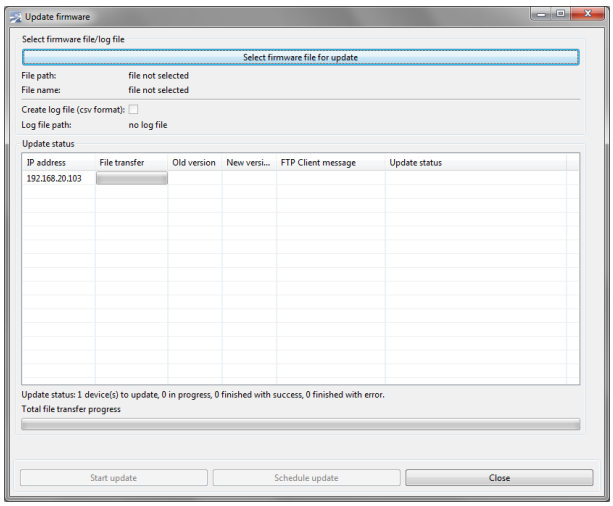

The transfer is done via FTP protocol using the internal FTP server of the switch. The server is automatically enabled before and disabled after the transfer.

©2026 MICROSENS GmbH & Co. KG - Hamm/Germany - www.microsens.com

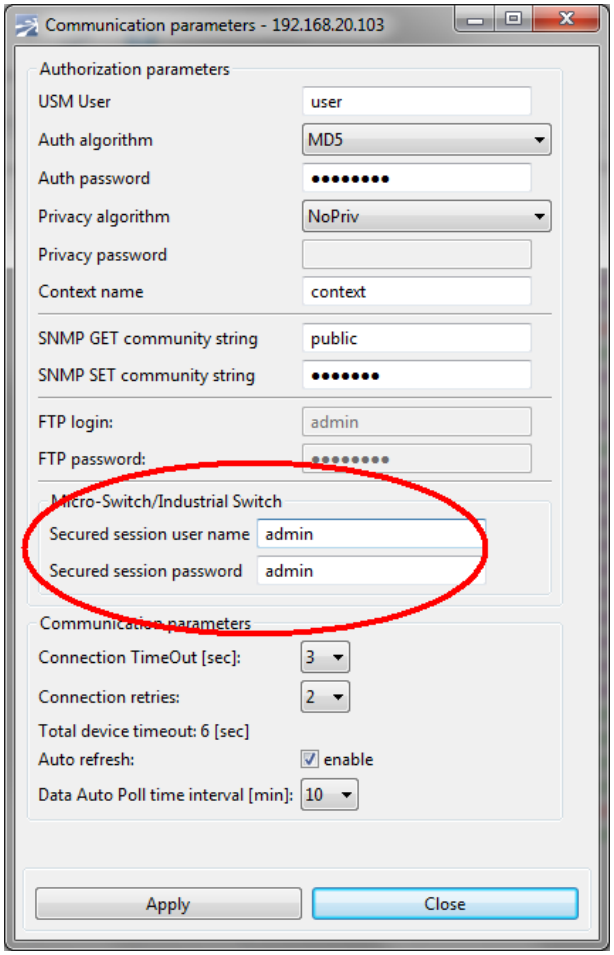

Please check the username/password settings in the 'communication parameters setting' for the device. For a successful firmware update, the username/password of a valid administrator account on the switch must be configured.

Q: What do I do if anything went wrong during the firmware update and now the device is not functional anymore?

Don't panic, if the device is not responding to any action due to a software problem, it can always be reactivated by exchanging the memory card with a card of a known good status.

As the memory card stores the full system including kernel and configuration, the switch can always be reactivated. The switch device-internally only stores the basic device-specific parameters (article number, serial number etc.) and the boot loader. These files are write protected and never altered at runtime.

Generally the situation should occur only in rare cases. The memory card utilizes a journaling filing system that is failure-tolerant by design.

©2026 MICROSENS GmbH & Co. KG - Hamm/Germany - www.microsens.com

Q: How do I store an individual switch configuration on the device?

The configuration parameters are stored in XML-files, separate for each feature group (e.g. 'VLAN' or 'Port-based Access Control'). All these XML-files stored in a directory folder define the device configuration. A nearly unlimited number of folders for different configurations can be created on the device.

With the command '*Management.Files.configuration.backup_to_folder = foldername*', the current device configuration is stored in a new folder with the given name.

The command '*Management.Files.configuration.restore_from_folder = foldername*', a stored config from the folder given is activated as running config. The folders are accessible externally by FTP, TFTP or SFTP file transfer.

Q: What does XML-file format mean?

XML means eXtensible Markup Language and defines a text-based format for storing information. All data content is encapsulated with tags. Keywords for these tags can be freely defined to fit best for the intended purpose. While XML files are mainly intended for automated processing by software, they still remain human readable and editable.

MICROSENS switch configuration files use a flexible format that can be easily adapted and extended for different device types.

Q: How do I reset the switch configuration to factory default settings?

In some cases it can be required to set back the switch configuration to factory default values. This may be necessary if a misconfiguration blocks any access to the switch (e.g. by incomplete VLAN settings) or a clean system is required.

The factory default settings are stored in the internal configuration folder 'factory'. This folder is always available and write protected.

Via CLI, the command '*Management.Files.configuration.restore_from_folder = factory*' overwrites the running configuration with the stored factory default values.

If no network access to the device is possible, the configuration can also be restored by pressing the system button on the device front panel. The button must be pressed continuously for approx. 10 sec. to initiate the restore process. The system LED is blinking blue during the operation.

> ***INFO:*** *The factory default settings do not affect the IP address settings. After a reset to factory default, the device is still accessible via the configured IP address before the restore. The IP address can always be reassigned using NMP Auto-Discovery function.*

Q: How do I define an individual factory default configuration for the switch?

Especially in locations with public access to the switch, it may not be desirable that the switch can be reset to a completely blank configuration, may allowing unrestricted access to the network and the switch management, leading to possible security threats.

For these cases, the folder from which the configuration is restored by pressing the system button can be configured. The parameter '*Management.Files.configuration.factory_default_folder*' holds the name of the configuration folder to be used. Changing this parameter to a different folder name that has been created with an alternative configuration makes this folder to the new factory default configuration.

©2026 MICROSENS GmbH & Co. KG - Hamm/Germany - www.microsens.com

The folder 'factory' is not altered and can always be reactivated.

ATTENTION: ***Please check the function of the individual configuration used as default setting carefully before activation. If this configuration is faulty, there is no way to change it back. If a problem occurs with a faulty default configuration, it is always possible to reactivate the switch by exchanging the memory card to a new one with standard default settings.***

©2026 MICROSENS GmbH & Co. KG - Hamm/Germany - www.microsens.com

39 GNU General Public License v3

GNU GENERAL PUBLIC LICENSE

Version 3, 29 June 2007

Copyright © 2007 Free Software Foundation, Inc. http://fsf.org/

Everyone is permitted to copy and distribute verbatim copies of this license document, but changing it is not allowed.

Preamble

The GNU General Public License is a free, copyleft license for software and other kinds of works.

The licenses for most software and other practical works are designed to take away your freedom to share and change the works. By contrast, the GNU General Public License is intended to guarantee your freedom to share and change all versions of a program--to make sure it remains free software for all its users. We, the Free Software Foundation, use the GNU General Public License for most of our software; it applies also to any other work released this way by its authors. You can apply it to your programs, too.

When we speak of free software, we are referring to freedom, not price. Our General Public Licenses are designed to make sure that you have the freedom to distribute copies of free software (and charge for them if you wish), that you receive source code or can get it if you want it, that you can change the software or use pieces of it in new free programs, and that you know you can do these things.

To protect your rights, we need to prevent others from denying you these rights or asking you to surrender the rights. Therefore, you have certain responsibilities if you distribute copies of the software, or if you modify it: responsibilities to respect the freedom of others.

For example, if you distribute copies of such a program, whether gratis or for a fee, you must pass on to the recipients the same freedoms that you received. You must make sure that they, too, receive or can get the source code. And you must show them these terms so they know their rights.

Developers that use the GNU GPL protect your rights with two steps: (1) assert copyright on the software, and (2) offer you this License giving you legal permission to copy, distribute and/or modify it.

For the developers' and authors' protection, the GPL clearly explains that there is no warranty for this free software. For both users' and authors' sake, the GPL requires that modified versions be marked as changed, so that their problems will not be attributed erroneously to authors of previous versions.

Some devices are designed to deny users access to install or run modified versions of the software inside them, although the manufacturer can do so. This is fundamentally incompatible with the aim of protecting users' freedom to change the software. The systematic pattern of such abuse occurs in the area of products for individuals to use, which is precisely where it is most unacceptable. Therefore, we have designed this version of the GPL to prohibit the practice for those products. If such problems arise substantially in other domains, we stand ready to extend this provision to those domains in future versions of the GPL, as needed to protect the freedom of users.

Finally, every program is threatened constantly by software patents. States should not allow patents to restrict development and use of software on general-purpose computers, but in those that do, we wish to avoid the special danger that patents applied to a free program could make it effectively proprietary. To prevent this, the GPL assures that patents cannot be used to render the program non-free.

The precise terms and conditions for copying, distribution and modification follow.

TERMS AND CONDITIONS

0. Definitions.

"This License" refers to version 3 of the GNU General Public License.

"Copyright" also means copyright-like laws that apply to other kinds of works, such as semiconductor masks.

"The Program" refers to any copyrightable work licensed under this License. Each licensee is addressed as "you". "Licensees" and "recipients" may be individuals or organizations.

To "modify" a work means to copy from or adapt all or part of the work in a fashion requiring copyright permission, other than the making of an exact copy. The resulting work is called a "modified version" of the earlier work or a work "based on" the earlier work.

A "covered work" means either the unmodified Program or a work based on the Program.

To "propagate" a work means to do anything with it that, without permission, would make you directly or secondarily liable for infringement under applicable copyright law, except executing it on a computer or modifying a private copy. Propagation includes copying, distribution (with or without modification), making available to the public, and in some countries other activities as well.

To "convey" a work means any kind of propagation that enables other parties to make or receive copies. Mere interaction with a user through a computer network, with no transfer of a copy, is not conveying.

An interactive user interface displays "Appropriate Legal Notices" to the extent that it includes a convenient and prominently visible feature that (1) displays an appropriate copyright notice, and (2) tells the user that there is no warranty for the work (except to the extent that warranties are provided), that licensees may convey the work under this License, and how to view a copy of this License. If the interface presents a list of user commands or options, such as a menu, a prominent item in the list meets this criterion.

1. Source Code.

The "source code" for a work means the preferred form of the work for making modifications to it. "Object code" means any non-source form of a work.

A "Standard Interface" means an interface that either is an official standard defined by a recognized standards body, or, in the case of interfaces specified for a particular programming language, one that is widely used among developers working in that language.

The "System Libraries" of an executable work include anything, other than the work as a whole, that (a) is included in the normal form of packaging a Major Component, but which is not part of that Major Component, and (b) serves only to enable use of the work with that Major Component, or to implement a Standard Interface for which an implementation is available to the public in source code form. A "Major Component", in this context, means a major essential component (kernel, window system, and so on) of the specific operating system (if any) on which the executable work runs, or a compiler used to produce the work, or an object code interpreter used to run it.

The "Corresponding Source" for a work in object code form means all the source code needed to generate, install, and (for an executable work) run the object code and to modify the work, including scripts to control those activities. However, it does not include the work's System Libraries, or general-purpose tools or generally available free programs which are used unmodified in performing those activities but which are not part of the work. For example, Corresponding Source includes interface definition files associated with source files for the work, and the source code for shared libraries and dynamically linked subprograms that the work is specifically designed to require, such as by intimate data communication or control flow between those subprograms and other parts of the work.

The Corresponding Source need not include anything that users can regenerate automatically from other parts of the Corresponding Source.

The Corresponding Source for a work in source code form is that same work.

©2026 MICROSENS GmbH & Co. KG - Hamm/Germany - www.microsens.com

2. Basic Permissions.

All rights granted under this License are granted for the term of copyright on the Program, and are irrevocable provided the stated conditions are met. This License explicitly affirms your unlimited permission to run the unmodified Program. The output from running a covered work is covered by this License only if the output, given its content, constitutes a covered work. This License acknowledges your rights of fair use or other equivalent, as provided by copyright law.

You may make, run and propagate covered works that you do not convey, without conditions so long as your license otherwise remains in force. You may convey covered works to others for the sole purpose of having them make modifications exclusively for you, or provide you with facilities for running those works, provided that you comply with the terms of this License in conveying all material for which you do not control copyright. Those thus making or running the covered works for you must do so exclusively on your behalf, under your direction and control, on terms that prohibit them from making any copies of your copyrighted material outside their relationship with you.

Conveying under any other circumstances is permitted solely under the conditions stated below. Sublicensing is not allowed; section 10 makes it unnecessary.

3. Protecting Users' Legal Rights From Anti-Circumvention Law.

No covered work shall be deemed part of an effective technological measure under any applicable law fulfilling obligations under article 11 of the WIPO copyright treaty adopted on 20 December 1996, or similar laws prohibiting or restricting circumvention of such measures.

When you convey a covered work, you waive any legal power to forbid circumvention of technological measures to the extent such circumvention is effected by exercising rights under this License with respect to the covered work, and you disclaim any intention to limit operation or modification of the work as a means of enforcing, against the work's users, your or third parties' legal rights to forbid circumvention of technological measures.

4. Conveying Verbatim Copies.

You may convey verbatim copies of the Program's source code as you receive it, in any medium, provided that you conspicuously and appropriately publish on each copy an appropriate copyright notice; keep intact all notices stating that this License and any non-permissive terms added in accord with section 7 apply to the code; keep intact all notices of the absence of any warranty; and give all recipients a copy of this License along with the Program.

You may charge any price or no price for each copy that you convey, and you may offer support or warranty protection for a fee.

5. Conveying Modified Source Versions.

You may convey a work based on the Program, or the modifications to produce it from the Program, in the form of source code under the terms of section 4, provided that you also meet all of these conditions:

1. The work must carry prominent notices stating that you modified it, and giving a relevant date.
2. The work must carry prominent notices stating that it is released under this License and any conditions added under section 7. This requirement modifies the requirement in section 4 to "keep intact all notices".
3. You must license the entire work, as a whole, under this License to anyone who comes into possession of a copy. This License will therefore apply, along with any applicable section 7 additional terms, to the whole of the work, and all its parts, regardless of how they are packaged. This License gives no permission to license the work in any other way, but it does not invalidate such permission if you have separately received it.
4. If the work has interactive user interfaces, each must display Appropriate Legal Notices; however, if the Program has interactive interfaces that do not display Appropriate Legal Notices, your work need not make them do so.

©2026 MICROSENS GmbH & Co. KG - Hamm/Germany - www.microsens.com

A compilation of a covered work with other separate and independent works, which are not by their nature extensions of the covered work, and which are not combined with it such as to form a larger program, in or on a volume of a storage or distribution medium, is called an "aggregate" if the compilation and its resulting copyright are not used to limit the access or legal rights of the compilation's users beyond what the individual works permit. Inclusion of a covered work in an aggregate does not cause this License to apply to the other parts of the aggregate.

6. Conveying Non-Source Forms.

You may convey a covered work in object code form under the terms of sections 4 and 5, provided that you also convey the machine-readable Corresponding Source under the terms of this License, in one of these ways:

1. Convey the object code in, or embodied in, a physical product (including a physical distribution medium), accompanied by the Corresponding Source fixed on a durable physical medium customarily used for software interchange.
2. Convey the object code in, or embodied in, a physical product (including a physical distribution medium), accompanied by a written offer, valid for at least three years and valid for as long as you offer spare parts or customer support for that product model, to give anyone who possesses the object code either (1) a copy of the Corresponding Source for all the software in the product that is covered by this License, on a durable physical medium customarily used for software interchange, for a price no more than your reasonable cost of physically performing this conveying of source, or (2) access to copy the Corresponding Source from a network server at no charge.
3. Convey individual copies of the object code with a copy of the written offer to provide the Corresponding Source. This alternative is allowed only occasionally and noncommercially, and only if you received the object code with such an offer, in accord with subsection 6b.
4. Convey the object code by offering access from a designated place (gratis or for a charge), and offer equivalent access to the Corresponding Source in the same way through the same place at no further charge. You need not require recipients to copy the Corresponding Source along with the object code. If the place to copy the object code is a network server, the Corresponding Source may be on a different server (operated by you or a third party) that supports equivalent copying facilities, provided you maintain clear directions next to the object code saying where to find the Corresponding Source. Regardless of what server hosts the Corresponding Source, you remain obligated to ensure that it is available for as long as needed to satisfy these requirements.
5. Convey the object code using peer-to-peer transmission, provided you inform other peers where the object code and Corresponding Source of the work are being offered to the general public at no charge under subsection 6d.

A separable portion of the object code, whose source code is excluded from the Corresponding Source as a System Library, need not be included in conveying the object code work.

A "User Product" is either (1) a "consumer product", which means any tangible personal property which is normally used for personal, family, or household purposes, or (2) anything designed or sold for incorporation into a dwelling. In determining whether a product is a consumer product, doubtful cases shall be resolved in favor of coverage. For a particular product received by a particular user, "normally used" refers to a typical or common use of that class of product, regardless of the status of the particular user or of the way in which the particular user actually uses, or expects or is expected to use, the product. A product is a consumer product regardless of whether the product has substantial commercial, industrial or non-consumer uses, unless such uses represent the only significant mode of use of the product.

"Installation Information" for a User Product means any methods, procedures, authorization keys, or other information required to install and execute modified versions of a covered work in that User Product from a modified version of its Corresponding Source. The information must suffice to ensure that the continued functioning of the modified object code is in no case prevented or interfered with solely because modification has been made.

If you convey an object code work under this section in, or with, or specifically for use in, a User Product, and the conveying occurs as part of a transaction in which the right of possession and use of the User Product is transferred to the recipient in perpetuity or for a fixed term (regardless of how

the transaction is characterized), the Corresponding Source conveyed under this section must be accompanied by the Installation Information. But this requirement does not apply if neither you nor any third party retains the ability to install modified object code on the User Product (for example, the work has been installed in ROM).

The requirement to provide Installation Information does not include a requirement to continue to provide support service, warranty, or updates for a work that has been modified or installed by the recipient, or for the User Product in which it has been modified or installed. Access to a network may be denied when the modification itself materially and adversely affects the operation of the network or violates the rules and protocols for communication across the network.

Corresponding Source conveyed, and Installation Information provided, in accord with this section must be in a format that is publicly documented (and with an implementation available to the public in source code form), and must require no special password or key for unpacking, reading or copying.

7. Additional Terms.

"Additional permissions" are terms that supplement the terms of this License by making exceptions from one or more of its conditions. Additional permissions that are applicable to the entire Program shall be treated as though they were included in this License, to the extent that they are valid under applicable law. If additional permissions apply only to part of the Program, that part may be used separately under those permissions, but the entire Program remains governed by this License without regard to the additional permissions.

When you convey a copy of a covered work, you may at your option remove any additional permissions from that copy, or from any part of it. (Additional permissions may be written to require their own removal in certain cases when you modify the work.) You may place additional permissions on material, added by you to a covered work, for which you have or can give appropriate copyright permission.

Notwithstanding any other provision of this License, for material you add to a covered work, you may (if authorized by the copyright holders of that material) supplement the terms of this License with terms:

1. Disclaiming warranty or limiting liability differently from the terms of sections 15 and 16 of this License; or
2. Requiring preservation of specified reasonable legal notices or author attributions in that material or in the Appropriate Legal Notices displayed by works containing it; or
3. Prohibiting misrepresentation of the origin of that material, or requiring that modified versions of such material be marked in reasonable ways as different from the original version; or
4. Limiting the use for publicity purposes of names of licensors or authors of the material; or
5. Declining to grant rights under trademark law for use of some trade names, trademarks, or service marks; or
6. Requiring indemnification of licensors and authors of that material by anyone who conveys the material (or modified versions of it) with contractual assumptions of liability to the recipient, for any liability that these contractual assumptions directly impose on those licensors and authors.

All other non-permissive additional terms are considered "further restrictions" within the meaning of section 10. If the Program as you received it, or any part of it, contains a notice stating that it is governed by this License along with a term that is a further restriction, you may remove that term. If a license document contains a further restriction but permits relicensing or conveying under this License, you may add to a covered work material governed by the terms of that license document, provided that the further restriction does not survive such relicensing or conveying.

If you add terms to a covered work in accord with this section, you must place, in the relevant source files, a statement of the additional terms that apply to those files, or a notice indicating where to find the applicable terms.

Additional terms, permissive or non-permissive, may be stated in the form of a separately written license, or stated as exceptions; the above requirements apply either way.

©2026 MICROSENS GmbH & Co. KG - Hamm/Germany - www.microsens.com

8. Termination.

You may not propagate or modify a covered work except as expressly provided under this License. Any attempt otherwise to propagate or modify it is void, and will automatically terminate your rights under this License (including any patent licenses granted under the third paragraph of section 11).

However, if you cease all violation of this License, then your license from a particular copyright holder is reinstated (a) provisionally, unless and until the copyright holder explicitly and finally terminates your license, and (b) permanently, if the copyright holder fails to notify you of the violation by some reasonable means prior to 60 days after the cessation.

Moreover, your license from a particular copyright holder is reinstated permanently if the copyright holder notifies you of the violation by some reasonable means, this is the first time you have received notice of violation of this License (for any work) from that copyright holder, and you cure the violation prior to 30 days after your receipt of the notice.

Termination of your rights under this section does not terminate the licenses of parties who have received copies or rights from you under this License. If your rights have been terminated and not permanently reinstated, you do not qualify to receive new licenses for the same material under section 10.

9. Acceptance Not Required for Having Copies.

You are not required to accept this License in order to receive or run a copy of the Program. Ancillary propagation of a covered work occurring solely as a consequence of using peer-to-peer transmission to receive a copy likewise does not require acceptance. However, nothing other than this License grants you permission to propagate or modify any covered work. These actions infringe copyright if you do not accept this License. Therefore, by modifying or propagating a covered work, you indicate your acceptance of this License to do so.

10. Automatic Licensing of Downstream Recipients.

Each time you convey a covered work, the recipient automatically receives a license from the original licensors, to run, modify and propagate that work, subject to this License. You are not responsible for enforcing compliance by third parties with this License.

An "entity transaction" is a transaction transferring control of an organization, or substantially all assets of one, or subdividing an organization, or merging organizations. If propagation of a covered work results from an entity transaction, each party to that transaction who receives a copy of the work also receives whatever licenses to the work the party's predecessor in interest had or could give under the previous paragraph, plus a right to possession of the Corresponding Source of the work from the predecessor in interest, if the predecessor has it or can get it with reasonable efforts.

You may not impose any further restrictions on the exercise of the rights granted or affirmed under this License. For example, you may not impose a license fee, royalty, or other charge for exercise of rights granted under this License, and you may not initiate litigation (including a cross-claim or counterclaim in a lawsuit) alleging that any patent claim is infringed by making, using, selling, offering for sale, or importing the Program or any portion of it.

11. Patents.

A "contributor" is a copyright holder who authorizes use under this License of the Program or a work on which the Program is based. The work thus licensed is called the contributor's "contributor version".

A contributor's "essential patent claims" are all patent claims owned or controlled by the contributor, whether already acquired or hereafter acquired, that would be infringed by some manner, permitted by this License, of making, using, or selling its contributor version, but do not include claims that would be infringed only as a consequence of further modification of the contributor version. For purposes of this definition, "control" includes the right to grant patent sublicenses in a manner consistent with the requirements of this License.

Each contributor grants you a non-exclusive, worldwide, royalty-free patent license under the contributor's essential patent claims, to make, use, sell, offer for sale, import and otherwise run, modify and propagate the contents of its contributor version.

©2026 MICROSENS GmbH & Co. KG - Hamm/Germany - www.microsens.com

In the following three paragraphs, a "patent license" is any express agreement or commitment, however denominated, not to enforce a patent (such as an express permission to practice a patent or covenant not to sue for patent infringement). To "grant" such a patent license to a party means to make such an agreement or commitment not to enforce a patent against the party.

If you convey a covered work, knowingly relying on a patent license, and the Corresponding Source of the work is not available for anyone to copy, free of charge and under the terms of this License, through a publicly available network server or other readily accessible means, then you must either (1) cause the Corresponding Source to be so available, or (2) arrange to deprive yourself of the benefit of the patent license for this particular work, or (3) arrange, in a manner consistent with the requirements of this License, to extend the patent license to downstream recipients. "Knowingly relying" means you have actual knowledge that, but for the patent license, your conveying the covered work in a country, or your recipient's use of the covered work in a country, would infringe one or more identifiable patents in that country that you have reason to believe are valid.

If, pursuant to or in connection with a single transaction or arrangement, you convey, or propagate by procuring conveyance of, a covered work, and grant a patent license to some of the parties receiving the covered work authorizing them to use, propagate, modify or convey a specific copy of the covered work, then the patent license you grant is automatically extended to all recipients of the covered work and works based on it.

A patent license is "discriminatory" if it does not include within the scope of its coverage, prohibits the exercise of, or is conditioned on the non-exercise of one or more of the rights that are specifically granted under this License. You may not convey a covered work if you are a party to an arrangement with a third party that is in the business of distributing software, under which you make payment to the third party based on the extent of your activity of conveying the work, and under which the third party grants, to any of the parties who would receive the covered work from you, a discriminatory patent license (a) in connection with copies of the covered work conveyed by you (or copies made from those copies), or (b) primarily for and in connection with specific products or compilations that contain the covered work, unless you entered into that arrangement, or that patent license was granted, prior to 28 March 2007.

Nothing in this License shall be construed as excluding or limiting any implied license or other defenses to infringement that may otherwise be available to you under applicable patent law.

12. No Surrender of Others' Freedom.

If conditions are imposed on you (whether by court order, agreement or otherwise) that contradict the conditions of this License, they do not excuse you from the conditions of this License. If you cannot vconvey a covered work so as to satisfy simultaneously your obligations under this License and any other pertinent obligations, then as a consequence you may not convey it at all. For example, if you agree to terms that obligate you to collect a royalty for further conveying from those to whom you convey the Program, the only way you could satisfy both those terms and this License would be to refrain entirely from conveying the Program.

13. Use with the GNU Affero General Public License.

Notwithstanding any other provision of this License, you have permission to link or combine any covered work with a work licensed under version 3 of the GNU Affero General Public License into a single combined work, and to convey the resulting work. The terms of this License will continue to apply to the part which is the covered work, but the special requirements of the GNU Affero General Public License, section 13, concerning interaction through a network will apply to the combination as such.

14. Revised Versions of this License.

The Free Software Foundation may publish revised and/or new versions of the GNU General Public License from time to time. Such new versions will be similar in spirit to the present version, but may differ in detail to address new problems or concerns.

Each version is given a distinguishing version number. If the Program specifies that a certain numbered version of the GNU General Public License "or any later version" applies to it, you have the option of following the terms and conditions either of that numbered version or of any later version published by the Free Software Foundation. If the Program does not specify a version

©2026 MICROSENS GmbH & Co. KG - Hamm/Germany - www.microsens.com

number of the GNU General Public License, you may choose any version ever published by the Free Software Foundation.

If the Program specifies that a proxy can decide which future versions of the GNU General Public License can be used, that proxy's public statement of acceptance of a version permanently authorizes you to choose that version for the Program.

Later license versions may give you additional or different permissions. However, no additional obligations are imposed on any author or copyright holder as a result of your choosing to follow a later version.

15. Disclaimer of Warranty.

THERE IS NO WARRANTY FOR THE PROGRAM, TO THE EXTENT PERMITTED BY APPLICABLE LAW. EXCEPT WHEN OTHERWISE STATED IN WRITING THE COPYRIGHT HOLDERS AND/OR OTHER PARTIES PROVIDE THE PROGRAM "AS IS" WITHOUT WARRANTY OF ANY KIND, EITHER EXPRESSED OR IMPLIED, INCLUDING, BUT NOT LIMITED TO, THE IMPLIED WARRANTIES OF MERCHANTABILITY AND FITNESS FOR A PARTICULAR PURPOSE. THE ENTIRE RISK AS TO THE QUALITY AND PERFORMANCE OF THE PROGRAM IS WITH YOU. SHOULD THE PROGRAM PROVE DEFECTIVE, YOU ASSUME THE COST OF ALL NECESSARY SERVICING, REPAIR OR CORRECTION.

16. Limitation of Liability.

IN NO EVENT UNLESS REQUIRED BY APPLICABLE LAW OR AGREED TO IN WRITING WILL ANY COPYRIGHT HOLDER, OR ANY OTHER PARTY WHO MODIFIES AND/OR CONVEYS THE PROGRAM AS PERMITTED ABOVE, BE LIABLE TO YOU FOR DAMAGES, INCLUDING ANY GENERAL, SPECIAL, INCIDENTAL OR CONSEQUENTIAL DAMAGES ARISING OUT OF THE USE OR INABILITY TO USE THE PROGRAM (INCLUDING BUT NOT LIMITED TO LOSS OF DATA OR DATA BEING RENDERED INACCURATE OR LOSSES SUSTAINED BY YOU OR THIRD PARTIES OR A FAILURE OF THE PROGRAM TO OPERATE WITH ANY OTHER PROGRAMS), EVEN IF SUCH HOLDER OR OTHER PARTY HAS BEEN ADVISED OF THE POSSIBILITY OF SUCH DAMAGES.

17. Interpretation of Sections 15 and 16.

If the disclaimer of warranty and limitation of liability provided above cannot be given local legal effect according to their terms, reviewing courts shall apply local law that most closely approximates an absolute waiver of all civil liability in connection with the Program, unless a warranty or assumption of liability accompanies a copy of the Program in return for a fee.

END OF TERMS AND CONDITIONS

©2026 MICROSENS GmbH & Co. KG - Hamm/Germany - www.microsens.com

40 Disclaimer

All information in this document is provided "as is" and subject to change without notice. MICROSENS GmbH & Co. KG disclaims any liability for the correctness, completeness or quality of the information provided, fitness for a particular purpose or consecutive damage. Any product names mentioned herein may be trademarks and/or registered trademarks of their respective companies. "MICROSENS" is a trademark of MICROSENS GmbH & Co. KG. "IEEE" is a trademark of the Institute of Electrical and Electronics Engineers, Inc. "Microsoft", "Windows" and "Internet Explorer" are either registered trademarks or trademarks of Microsoft Corporation in the United States and/or other countries. "Mozilla" and "Firefox" are registered trademarks of the Mozilla Foundation.

©2026 MICROSENS GmbH & Co. KG, Küferstr. 16, 59067 Hamm/Germany. All rights reserved. This document in whole or in part may not be duplicated, reproduced, stored or retransmitted without prior written permission of MICROSENS GmbH & Co. KG.

Document generated using Documentation rev. 268 and Unified_Config rev. 12892.