MICROSENS

Quick Start Guide - 24-Port Gigabit PoE++ 4-Port SFP L2+ Managed Ethernet Switch

MICROSENS GmbH & Co. KG
Kueferstr. 16
59067 Hamm/Germany

Tel. +49 2381 9452-0
FAX +49 2381 9452-100
E-Mail info@microsens.de
Web www.microsens.de

Table of Contents

1. Packing List

Please check the following items after unpacking, if any missing, please contact your local dealer.

No.	Items	Quantity
1	Switch	1 set
2	AC Power Module and Cable	1 set
3	DC Power Module and Cable (Optional)	1 set
4	Mounting Accessory	1 set
5	Quick Installation Guide	1 pc

2. Safety Information

Before performing an operation, read the following operation instructions and precautions to be taken, and follow them to prevent accidents.

2.1. General Requirements

- Only qualified and skilled personnel must install, configure, and unmount the device. The device must not be disassembled.
- When operating the device, obey the local safety regulations. The safety precautions provided in the document are supplementary and shall be in compliance with the local safety regulations.
- When operating the device, in addition to the precautions (please see the notes below), follow the specific safety instructions.
- The installation and maintenance personnel need to understand the basic safety precautions to be taken.
- Do not block the ventilation while the device is running. Keep a minimum distance of 5 cm from the ventilation to the walls or the other objects that block the ventilation.
- Do not operate the device in an area that exceeds the maximum recommended ambient temperature of 45°C.
- Do not place the device in the environment that has inflammable and explosive air or fog. Do not perform any operation in this environment.

2.2. Electric Safety

- During the installation of the AC power supply facility, follow the local safety regulations. The personnel who install the AC facility must be qualified to perform high voltage and AC operations. *Before touching the device or hand-operating parts, wear a grounded electrostatic discharge (ESD) wrist strap. It can prevent the sensitive components from damage by the static electricity in the human body.

2.3. Optical Safety

- When handling optical fibers, do not stand close to, or look at the optical fiber outlet directly with unaided eyes.
- Cutting and splicing fibers must be performed by the trained personnel only.
- Before cutting or splicing a fiber, ensure the fiber is disconnected from the optical source. After disconnecting the fiber, use protecting caps to protect all the optical connectors.

3. Product Introduction

3.1. Overview

The product is 24-Port Gigabit PoE++ 4-Port SFP L2+ Managed Ethernet Switch.

The switch provides 24 Gigabit downlink RJ-45 Ethernet ports and 4 Gigabit uplink SFP ports. It meets IEEE802.3af/at/bt standard.

All downlink RJ-45 Ethernet ports support Power-over-Ethernet (PoE++) and deliver up to 90W power per port. The total PoE budget is up to 1900W. The function can be configured via software.

It has extensive L2+ management functions and can be easily managed via a WEB GUI (http/https), CLI (telnet/ssh/console) or SNMP.

The switch supports redundant power supply. It has 2 pluggable high performance power modules. 1 AC power module comes standard, and another module (AC or DC) needs to be purchased separately.

3.2. Hardware Introduction

Front Panel:

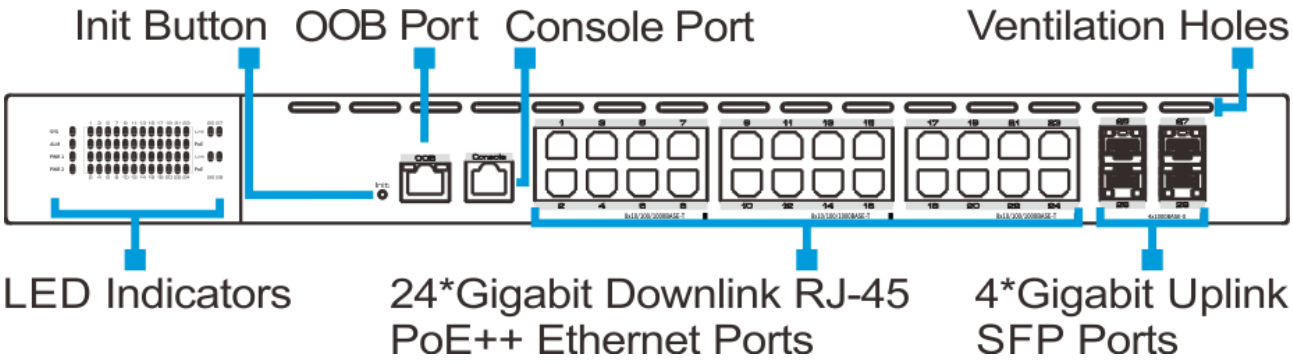

Rear Panel:

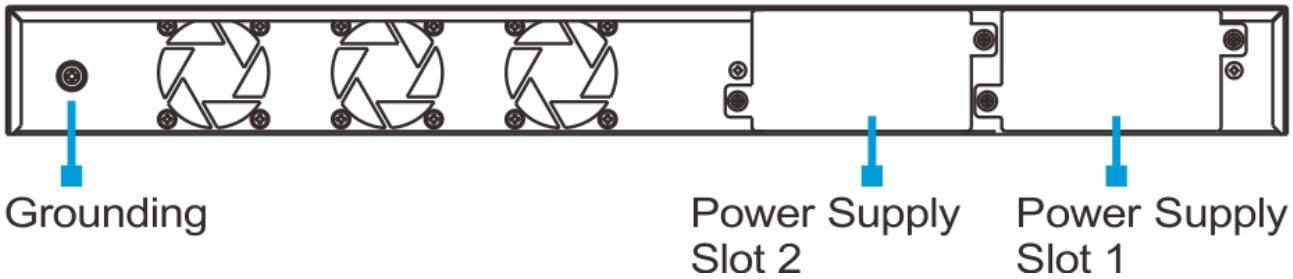

<u>LED Indicators</u>

Indicators	Status	Descriptions

PWR 1	Main power supply indicator	On	The main power supply is on.
		Off	The main power supply is off.
PWR 2	Backup power supply indicator	On	The backup power supply is on.
		Off	The backup power supply is off.
SYS	System indicator	Blink	System is working normally.
		On/Off	System failure
ALM	Alarm indicator	On	The device alarms.
		Off	The device is working normally.
Link	Port link indicators	On	The port is linking normally.
		Blink	The port is transmitting or receiving data.
		Off	The port links down.
PoE	Port PoE indicators	On	The port is supplying PoE normally.
		Off	The port stops supplying PoE.

Power Supply Slot 1/2

The switch has 2 power supply slots. Both slots can be plugged into AC or DC power module. When a power module is installed in slot 1, the PWR 1 indicator is on; when a power module is installed in slot 2, the PWR 2 indicator is on.

Console Port

The device contains a RJ-45 interface as the console port for local management interface. For the console port, a standard RJ-45 connector is used. Use a RS-232 calbe (Sub-D9 to RJ-45) to connect the console port with the COM port of a PC.

See the default configuration in chapter “6 Factory Settings”.

OOB Port

OOB (Out of Band) port is the management interface MEth0/0/1, a special Ethernet RJ-45 port that can be configured with IP address to provide users with configuration management support. Users can log in Web GUI of the switch through this interface. The OOB port does not

occupy bandwidth nor undertake business transmission. See the default configuration in chapter “6 Factory Settings”.

Init Button

The init button has two operating modes.

- By short pressing the button, the switch will be reset and the configuration is as previous setting saved.
- By pressing the button over 5s, the switch will be restored to the original factory default setting.

4. Installation

The switch support three installation modes:

- Rack mounted installation
- Desktop installation
- Wall mounted installation

Following with the dimensions of the switch and its accessories.

Dimensions (mm)

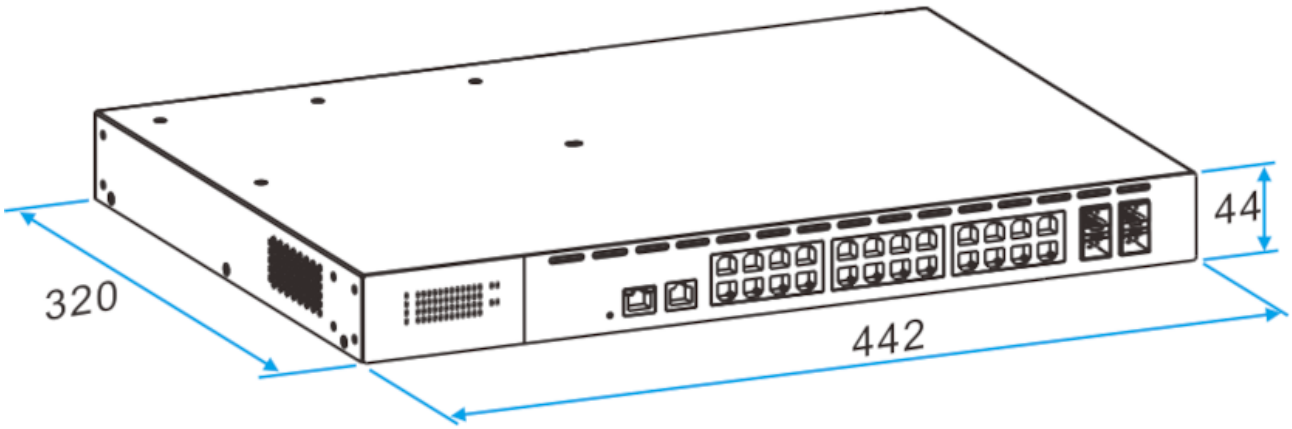

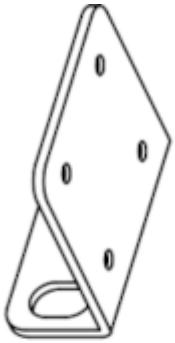

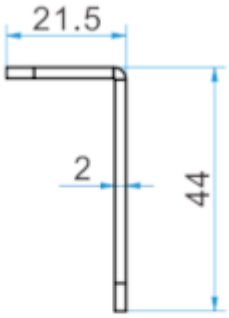

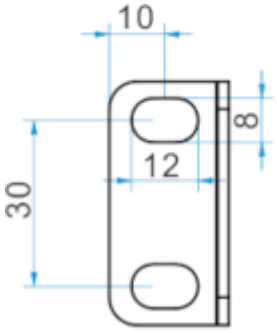

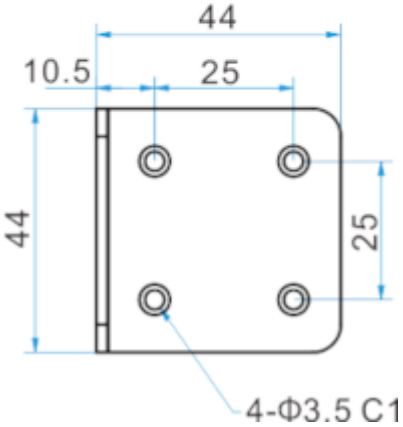

4.1. Rack Mounted Installation

This switch supports 19” rack mounted installation. Following with the installation steps below.

Step 1: Fix the provided rack mounted hangers to the left and right side of the device using 4 screws each. Use the four holes on the left and right side of the device.

Accessories

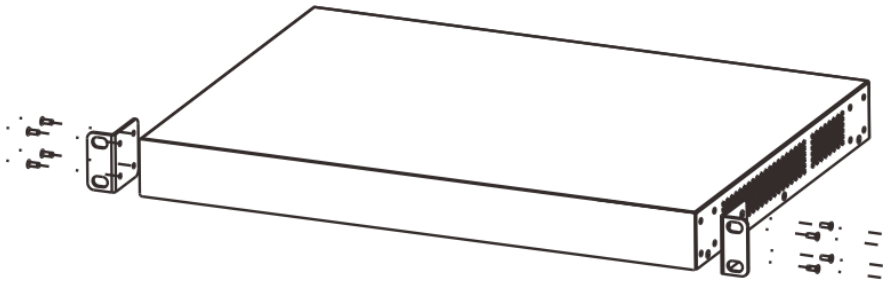

Step 2: Install the switch to the rack. The distance between the devices in the rack should be more than 5cm.

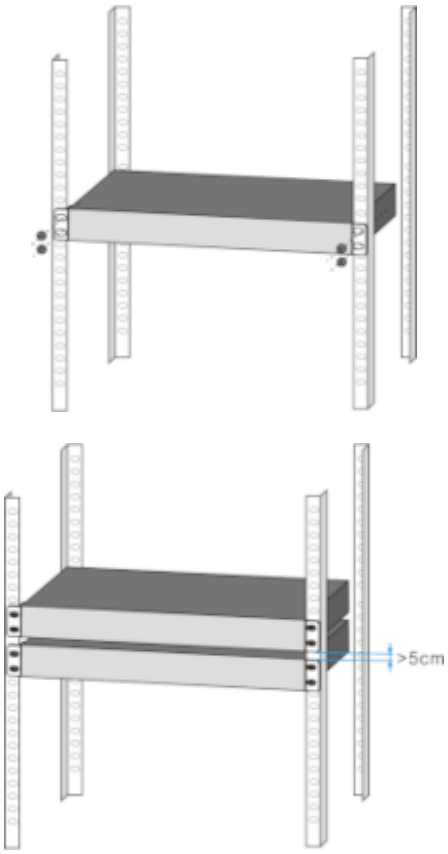

4.2. Desktop Installations

This series switch supports desktop installation. Users can put this product on clean, stable, grounded workbench. Please follow the steps below:

- Carefully put the device upside down, clean the grooves on the chassis backplane with soft cloth to make sure there is no oil or dust in it.
- Remove the stickers on the foot pad, paste the foot pad on the four corners at the bottom of the switch.
- Carefully put the device upright on the workbench.

4.3. Wall-mounted Installations

Drill 4 holes on the wall where the device is installed according to the dimensions of the switch and accessories. Insert an expansion anchor into each hole drilled in the wall, and beat the top of it with a rubber hammer until all the anchor is inserted into the wall.

Please follow the steps below:

Fix the provided rack mounted hangers to the left and right side of the device using 4 screws each. Use the four holes on the left and right side of the device. Fix to the switch to the wall

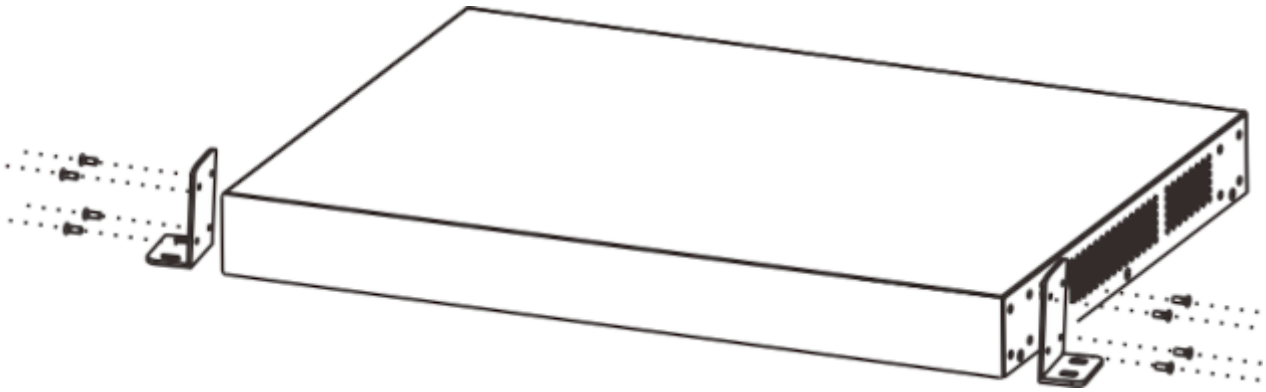

5. Connect the Power Supply

Ground the switch housing with the grounding screw on the side of the housing! Always make the ground connection first and disconnect it at the end.

Use one end of PGND cable to connect the M4 grounding connector of the switch, the other end to a ground point. The PGND of the switch is shorted to the copper protection ground bar provided by the user. The PGND cable used should be an alternating yellow and green plastic insulating one with copper core, with cross-sectional area greater than 2.5mm².

The figure below takes rack-mounted installation as example.

Ground the switch housing:

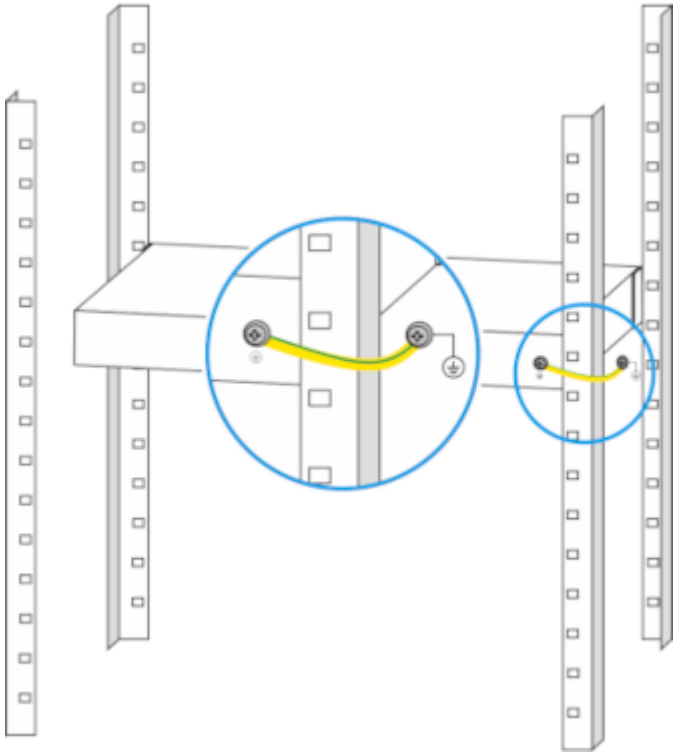

The switch supports redundant power supply. There are two typical options of power module:

Option 1

AC+AC Redundant power supply with the same specification, both pluggable.

Items	Specifications
AC	100~127V, 50~60Hz 13A max, Rated output power: 1000W max 200~240V, 50~60Hz 10A max, Rated output power: 2000W max
DC	Rated power: 54V; Power range: 53.5V~57V, 40A, Rated output power: 2000W max

Option 2

AC+DC Redundant power supply, both pluggable.

Items	Specifications
AC	100~127V, 50~60Hz 13A max, Rated output power: 1000W max 200~240V, 50~60Hz 10A max, Rated output power: 2000W max
DC	Rated power: 54V; Power range: 53.5V~57V, 40A, Rated output power: 2000W max

5.1. 100~240 VAC Supply

Use an AC power cable to connect the AC power connector of the switch. It is recommended to use the AC power cable provided in the package. Connect the mains supply to the building's power supply network.

Please observe the following specifications:

Items	Specifications
Input Voltage	AC 100~240V 50/60Hz
Input Current	2.5A max

The power module support hot swap. Users can remove or assemble the module as requirements. Here takes installing an AC power module into slot 1 as example. Please follow the steps below.

Step 1: Remove the bezel on the rear panel of the switch.

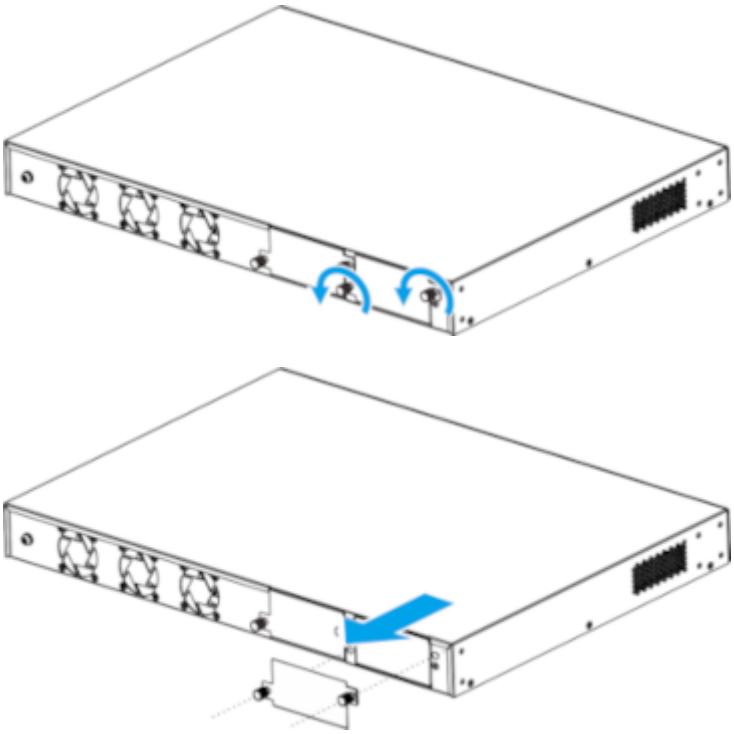

Step 2: Push the power supply module into the power supply slot. When you hear a "click" sound, it means that the power module has been installed in the correct position.

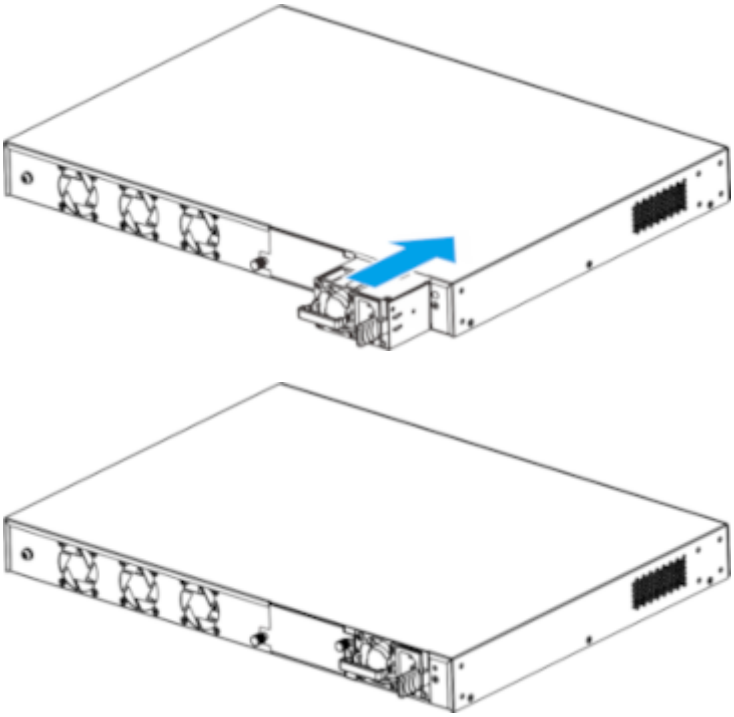

5.2. 53.5~57 VDC Supply

Use an DC power cable to connect the DC power connector of the switch. We recommend that you use the DC power cable provided in the package. Connect the mains supply to the building's power supply network.

Items	Specifications
Input Voltage	DC 53.5~57V
Input Current	40A max

The power module supports hot swap. Users can remove or assemble the module as requirements. Here takes installing a DC power module into slot 2 of a switch that has installed an AC power module in slot 1 as example. Please follow the steps below.

Step 1: Remove the bezel on the rear panel of the switch.

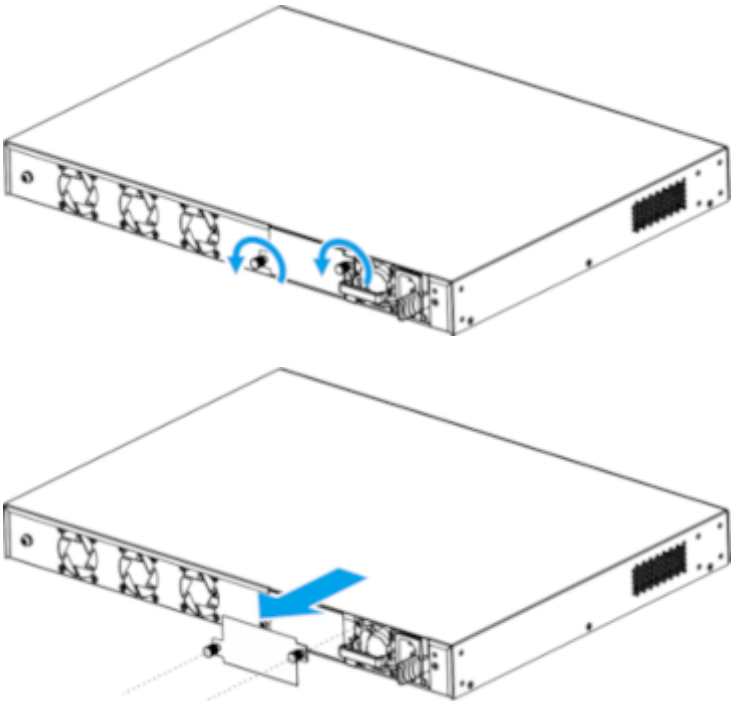

Step 2: Push the power module into the slot. Fix the screws stably.

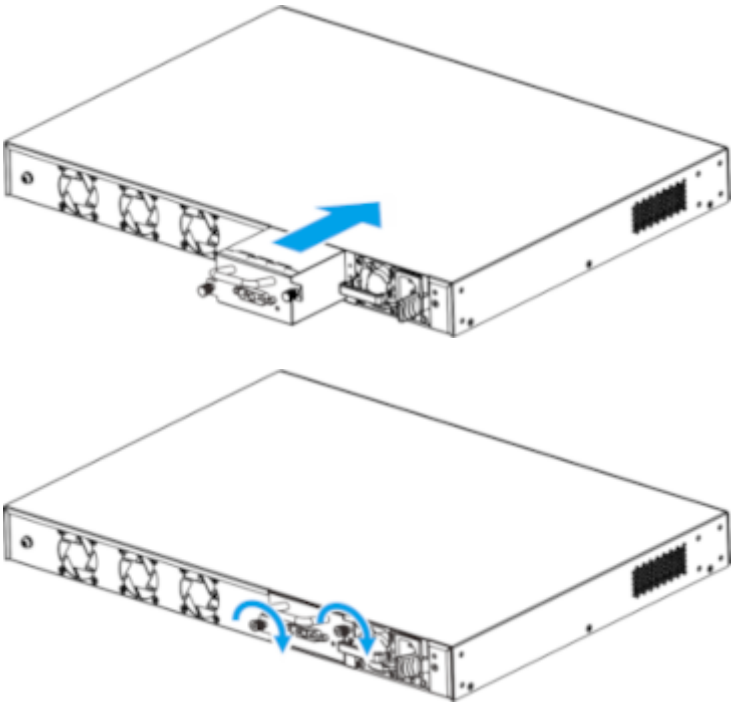

5.3. Starting Up

After connection to the power supply, the switch starts automatically. LED indicators “PWR 1” or “PWR 2” turns green.

With the Quick PoE feature, the switch provides PoE immediately when it is powered on, and after about 90s, the system is ready.

To switch off the device, always disconnect both the main and redundant power supply.

6. Factory Settings

Please note that the factory settings may change with future firmware versions. For this reason we recommend that you check the release notes for information about any changes to the factory settings before carrying out a firmware update.

Items	Specifications
Management Interfaces	
Console Port (Sub-D9 to RJ-45)	Enabled, Transfer rate: 115200 bit/s Flow control: no Test mode: no Stop bits: 1 Data bits: 8
OOB Port (Ethernet management port)	Enabled Transfer rate: 10/100Base-TX
SSH	Disabled
Telnet	Disabled
SNMP	Disabled
Web Manager	Enabled
User Level	User: admin Password: admin Access privilege: 15 (Full access rights, This user can adjust all settings of the switch.)
IP Configuration	
Default Static IP Address	192.168.1.200
Default Subnet Mask	255.255.255.0
Physical Ports	
Ethernet RJ-45 Ports	Ports 1~24 1000M bit/s operation enabled in VLAN 1
SFP Ports	Ports 25~28 SFP inserted: 1000Base-X operation

7. Access Network Management

After starting up successfully, connect the switch to your local network segment using a suitable cable to access the swtich network management system. For details, please refer to one of the following documents:

- Web Configuration Guide Describes Web network management system configuration instructions.
- CLI Configuration Guide Describes CLI-based configuration instructions.

8. Specifications

Items	Specifications
Hardware Specifications	
Downlink Ports	24*10/100/1000Base-T PoE++ RJ-45 (Auto-MDI/MDI-X)
Uplink Ports	4*1000Base-X SFP
Console Port	1*RJ-45 console port
OOB Port	1*100Base-TX RJ-45 port
Init Button	Short press to restart the switch long press >5s to initialize the system
Led Indicators	2*power indicators 1*system indicator, 1*alarm indicator 24*downlink port link indicators, 24*downlink port PoE indicators, 4*uplink port link indicators
Cable	Cat5e or better
Dimensions (W*D*H)	442*320*44mm
Net Weight	Standard with 1 AC power module: 5kg AC power module: 1 kg DC power module: 0.3kg
Input Voltage	Support redundant power supply, see the details in chapter"0 Connect the Power Supply"
Power Consumption	≤30W (Not include PoE)
Installation	Rack-mounted/desktop/wall-mounted
Material	Metal shell
Switch Property	
Forwarding Modes	Store and Forward

Switching Capacity	56Gbps / non-blocking
Packet Forwarding Rate	41.7Mpps
MAC Table	16k, supported auto learning
Packet Buffer	12Mbit
Jumbo Frame	9kB

PoE

PoE Device	Endpoint PSE (Power Sourcing Equipment)
PoE Standard	IEEE 802.3af/at/bt
PoE Pin Assignment	1/2(-), 3/6(), 4/5 (), 7/8 (-)
PoE Power Output	54V DC
PoE Budget	90W max for each port 1900W max for whole switch

Standard Conformance

Standards Compliance	IEEE 802.1p Priority Queuing IEEE 802.1Q VLAN tagging IEEE 802.1D Spanning Tree Algorithm IEEE 802.1w Rapid Spanning Tree IEEE 802.1x Authentication IEEE 802.3ad Link Aggregation IEEE 802.3x Flow Control IEEE 802.3 Ethernet IEEE 802.3u Fast Ethernet IEEE 802.3z Gigabit Ethernet IEEE 802.3af Power Over Ethernet IEEE 802.3at Power Over Ethernet IEEE 802.3bt Power Over Ethernet

EMC

EMC	FCC 47 CFR Part 15 Class A EN55032 Class A IEC61000-4-2, Level 3: Contact Discharge: ±6kV, Air Discharge: ±8kV IEC61000-4-3, Level 2: 3V/m IEC61000-4-4, Level 2: 1kV IEC61000-4-5, line to earth: 6kV IEC61000-4-6, Level 2 (0.15MHz~80MHz)

LVD

LVD	EN 62368-1:2014 EN 62328-A11:2017

Environments

Operating	Temperature: -5°C~45°C Relative Humidity: 5%~95% (Non-condensation)
Storage	Temperature: -40°C~85°C Relative Humidity: 5%~95% (Non-condensation)

Certifications

Certifications	CE, FCC

Disclaimer

All information in this document is provided 'as is' and is subject to change without notice.

MICROSENS GmbH & Co. KG disclaims any liability for the correctness, completeness or quality of the information provided, fitness for a particular purpose or ensuing damage.

Any product names mentioned herein may be trademarks and/or registered trademarks of their respective owners.

Document ID: QSG-EN-21022_Quick-Start-Guide_MS400970M_v1.0