Datasheet

MICROSENS

Entry Line
Industrial Fast Ethernet Micro Bridging Converter

Features

Fast Ethernet Bridging Converter

- SFP-Slot (100Base-X)
- 10/100Base-TX Port

Ports

- 1x 10/100Base-TX
  1x 100Base-X (SFP-Slot)
- An SFP Transceiver is not included in Scope of delivery
- 1x 3-Pin Terminal Block

Housing

- DIN rail bracket or wall bracket (scope of
- delivery)
- Protection class: IP 40
- Metal Housing

Power supply

- Input 18..36 V AC
- Input 12..60 V DC
- an external power supply (230 V AC) is not included in scope of delivery

Technical Details

Fast Ethernet Bridging Converter

Type	Fast Ethernet Bridging Converter, IEEE 802.3 compliant For industrial applications
Data Processing	Store-and-forward
MAC Table	1K
Packet Buffer	1MB

Environment

Operating temp.	-40..+75 °C
Humidity	5 ..95%, non condensing
Storage	-40..+85 °C

Twisted Pair Ports

Type	Fast Ethernet 10/100Base-TX
Connection	RJ-45 socket, shielded
Cable type	Shielded Twisted-Pair Cable, Cat. 5, Impedance 100 Ohm,
Flow Control	Pause Frames (IEEE 802.3x)

FO Port

Type	1x SFP, 100Base-X
Flow Control	IEEE 802.3x Flow Control
Connection	SFP with LC (typical)
SFP	not included in scope of delivery

Displays (LEDs)

Power PWR	ON: detected
Lnk/Act	On: Fiber detected Blinking: FO Data transfer
TP-Port left side	Green: TP detected Blinking: TP Data transfer
TP-Port right side	Orange On: 100Mbit/s detected Orange OFF: 10Mbit/s detected

DIP-Switch

DIP 1	Converter Mode / Switch Mode
DIP 2	LFP on / off

Power Supply (DC-Voltage)

Connection	3-Pin Terminal Block
Input	12..60 V DC / 18..36 V AC
Power consumption	1.44 W

Mechanical

Dimensions incl. DIN-Adapter	59 x 36 x 49 mm (L x W x H, without connections)
Mounting	DIN-ISO support rail (35mm) to DIN EN 50022 or wall mounting
Protection-class	IP40 (Metal Housing)

Standards

EMC	CE / ROHS
Safety	EN60950-1
IEEE	802.3 10Base-T 802.3u 100Base-TX / FX 802.3x Flow Control

LFP-Function

The Fast Ethernet Bridge has "Link Through" link transparency functionality to support link control. This function passes the link status of the fiber optic section to the twisted pair section (and vice versa). Thus interrupting the twisted pair link if the fiber link is lost or the fiber link if the twisted pair link is lost. This ensures a uniform link status of the entire connection. Connected end devices are therefore able to detect the loss of a segment by physically disconnecting the neighbouring segment.

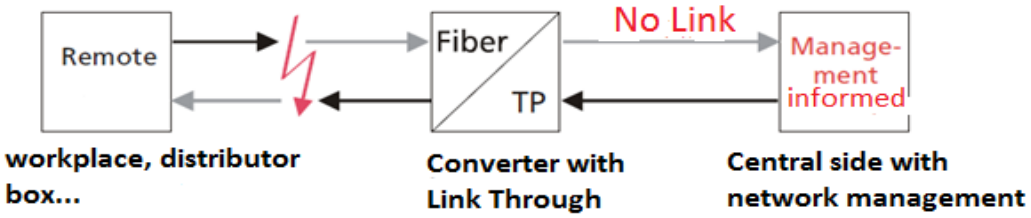

This function is enabled/disabled by DIP switch.

Attention: if the Link Through function is activated, connections are only initialized if both sides (optical fiber and twisted pair) are connected to the bridge.

Dimensions

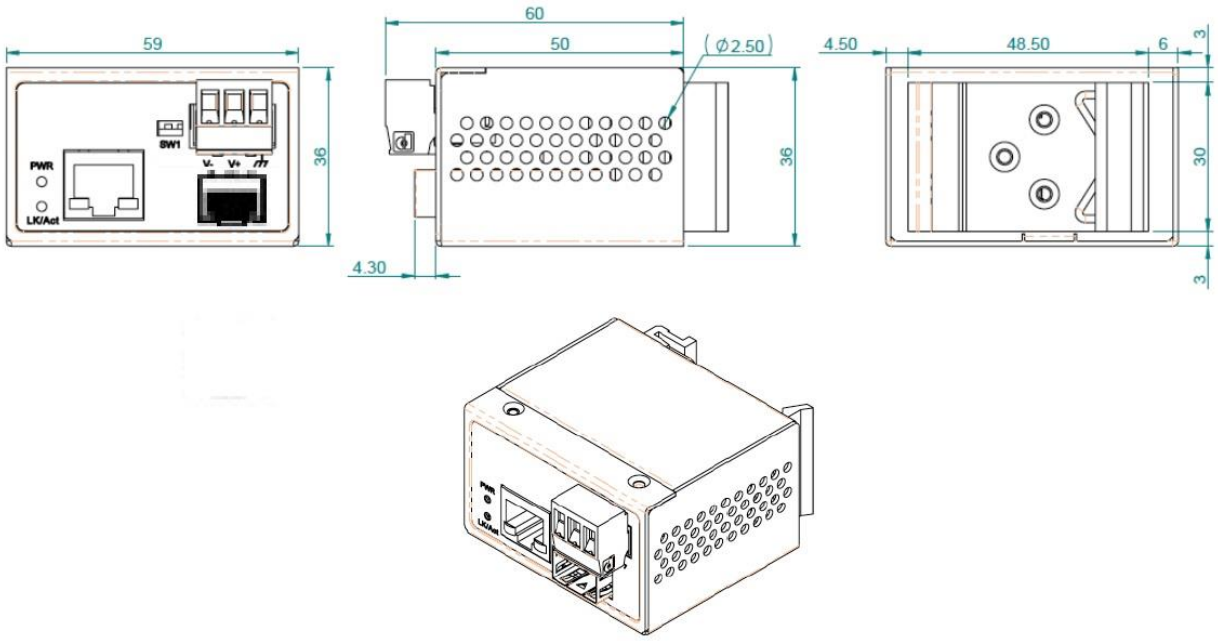

Power supply

Power is supplied by an external power supply with an output voltage of 12…60 V DC resp. 18…36 V AC. The power supply is not included in the scope of delivery, but can be ordered separately (e.g. MS700420). It is connected via the pluggable screw connector on the 3-Pin Terminal Block of the device.

Safety Notes

Attention: Infrared light, which is used for data transmission in a fiber optic network, is not visible to the human eye, but can still cause damage.

To avoid damage to the eyes:
- Never look directly with the eye into the outputs of optical components or fiber optics. Risk of blindness!
- Cover all unused optical connections with caps.
- Do not put the transmission line into operation until all connections have been made

The active laser technology used in this product complies with **Laser-Class 1**

DANGER: Conductive components of power and telecommunications networks can carry dangerously high voltage.

To avoid electric shock:
- Do not carry out installation or maintenance work during lightning storms.
- All electric installations must be carried out in accordance with local regulations.

Order Information

Industrial Fast Ethernet Micro-Bridge

Description	Art.-No.
Industrial Fast Ethernet Bridge, 1x 10/100Base-TX, 1x 100Base-X (SFP-Slot), Extended Temperature range -40..+75°C	
Industrial Fast Ethernet Bridging Converter 1x 10/100Base-TX to 1x 100Base-X SFP Port	**MS657049X**

Alternativ Entry Line Products

Description	Art.-N0.
Industrial Gigabit Bridge, 1x 10/100/1000Base-T, 1x 100/1000Base-X (SFP-Slot), Extended Temperature range -40..+75°C	
Industrial Gigabit Ethernet Bridging Converter 1x 10/100/1000Base-T to 1x 100/1000Base-X SFP Port	**MS657099X**
Industrial Gigabit Ethernet Bridging Converter with PoE+ 1x 10/100/1000Base-T with PoE+ (30 W) to 1x 100/1000Base-X SFP Port	**MS657099PX**

5-Port Industrial Fast Ethernet Switch, Extended Temperature range -40..+75°C (Single mode on request)	
Industrial Switch, 4x 10/100Base-TX, 1x 100Base-FX, Multimode SC, 9..56 V DC redundant	**MS657102X**
Industrial Switch, 4x 10/100Base-TX, of which 4x with PoE+, 1x 100Base-FX, Multimode SC, 48..56 V DC redundant	**MS657102PX**

Accesoires

Description	Art.-No.
SFP Transceiver, Extended Temperature range -40.+85°C (more versions available on request)	
Fast Ethernet, Digital Diagnostic 1310 nm Multimode, 100Base-FX, LC duplex	**MS100190DX**
Fast Ethernet, Digital Diagnostic 1310 nm Single mode, 100Base-FX, LC duplex	**MS100191DX**

(Abb.: MS700456)

Industrial DIN-Rail Power Supply	
Industrial DIN-Rail Power Supply 24VDC/1,25A (30W) Input 100..240VAC/120..375VDC, Out: 24..28VDC, -20..+70°C	**MS700440**
DIN-Rail power supply **48…56 VDC** / 1,05 A (50W), Wide range input 85…264 VAC / 180…264 VDC Operating temperature -10°C bis +70°C	**MS700455**
DIN-Rail power supply **45…55 VDC** / 2.5 A (120W), Wide range input 90…132 / 180…264 VAC Operating temperature -35…+70°C	**MS700456**