MICROSENS

Datasheet

RS-232 Serial Industrial Profi Line Converter

Made
in
Germany

Description

MICROSENS has developed the RS-232 Profi Line serial converter for extremely demanding applications in industrial environments. This converter is used for the coupling of devices, switchgear or machine controls, which are connected to each other via fiber optics.

The conversion takes place transparently including the signals for handshake. Signals from DC up to the maximum data rate can be converted. Depending on the cable type, fiber optic transmission is possible over a distance of up to 80 km, in special cases even up to 125 km. The serial converters are always used in pairs.

The connection of the respective end device can optionally be carried out via SUB-D9 or additionally parallel connected terminals.

In addition to the RS-232 converter, the product family includes converters for

- RS-422
- RS-485

Optical Parameter

	typ. Dsictance(km)	opt. Power (dBm)	Sensitivity (dBm)	Wavelength (nm)
Multimode	2	-19	-31	1310
Singlemode	15 40 80	-15 -5 -5	-31 -34 -34	1310 1310 1550

Technical Details

Type	RS-232 / FO converter for industrial use	
Fiber type	Multimode 50 or 62,5/125µm duplex Singlemode 9/125µm duplex	
Cable type	RS-232 with SUB-D9 pin plug or Fieldbus installation via 4-pin screw/clamp connector	
LED Displays	*Power*	Ready for operation
	FO-Xmt	Sending Data FO
	FX-Rcv	Receivind Data FO
	TXD	Sending Data TP
	RXD	Receiving Data TP
	Alarm	Link interrupted
Mounting	DIN-Rail 35mm, EN 50022	
Power supply	Redundant 18-36 VDC, max. 500mA	
Operating temp.	-20..+60 °C	
Storage temp.	-20..+80 °C	
Humidity	5% bis 90 % non condensing	
Dimensions	38 x 116 x 108 mm (B x H x T)	

Dimensions

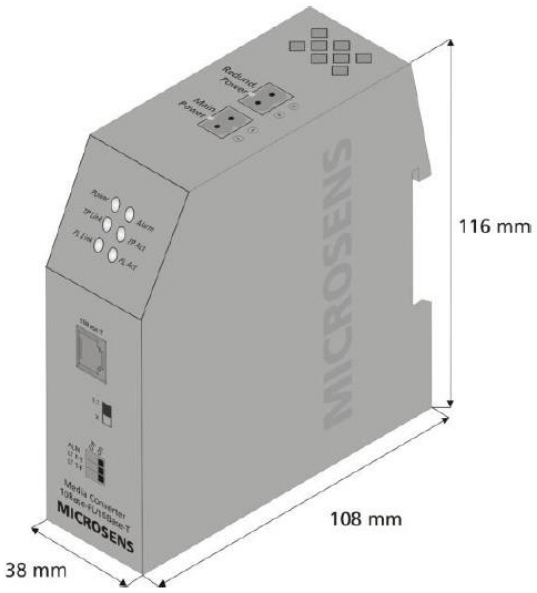

Method

This RS-232 converter transmits the data signals TXD and RXD as well as the handshake signals CTS and RTS.
The pinout of the SUB-D9 socket is designed so that it can be connected to a PC or a modem with an uncrossed cable. The fiber optic connection with two media converters behaves identically to a null modem cable.
In addition, DIP switches are available on the bottom of the device next to the fiber optic connection for configuration for test modes.

Remote-Loop, is used for testing the fiber optic connection. If this switch is activated, the data is transmitted on the FO, is also received on the FO side. When this function is active, the relay contact is activated, since no data is transmitted between the FO and copper connections.

Local-Loop, is used to test the copper connection. If this switch is activated, the data transmitted on the copper side is the same as the data received on the copper side. If this function is active, the relay contact is activated because no data is transmitted between the fiber-optic and copper connections.

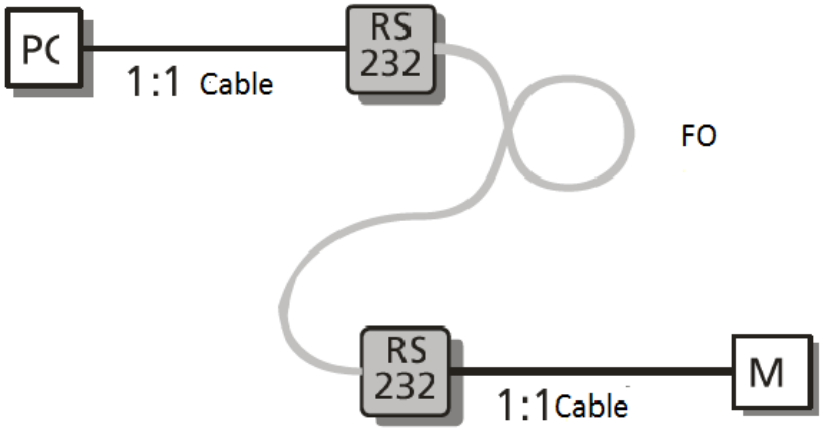

Configuration

The switches DIP1 to DIP4 are used to set a special operating mode for test purposes.

Switch	**Function**
DIP1	Remote Loop
DIP2	Local Loop
DIP3	not used
DIP4	not used

Attention! The loop function is for test purposes only. When the loop function is activated, there is no normal operating mode. Communication between the two terminals via RS-232 does not take place! The relay contact is in alarm condition.

PIN Assignment

The electrical RS-232 connection can be done either via a standard SUB-D9 socket or a 4-pin screw clamp.

The SUB-D9 socket is assigned as follows:

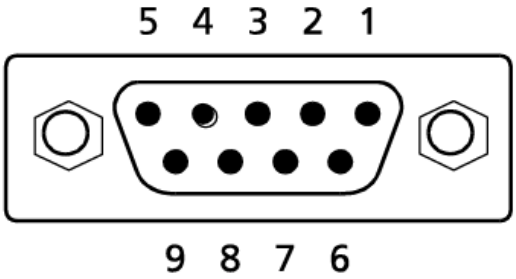

PIN	Signal	Desription
1		
2	TXD	Tranceiving data
3	RXD	Receiving Data
4		
5	GND	Grounding
6		
7	CTS	Handshake
8	RTS	Handshake
9		

Assignment 4-pin screw clamp:

RS-232	
1	RXD
2	GND
3	TXD
4	GND

Alarm contact

Connection

The three-pin, potential-free alarm contact enables monitoring of the operating status via a connected external signal transmitter.

The contact of the alarm relay is positioned in the form of a clamp underneath the device.

Assignment

The switch contact can be assigned as needed:

- NO = Normal Open
- NC = Normal Closed

The signal status is confirmed by LED indicators (alarm LED).

Important!

The status of the fiber link can be verified by checking the alarm LED.

For link tests it is possible to switch a simple loop (connection between transmitter and receiver).

Mounting

The converter has a solid stainless steel housing with integrated mounting on top-hat rails. Standardized 35 mm device mounting rails to DIN EN 50 022 can be used for mounting.

The MICROSENS device is snapped into place using the corresponding snap-on mounting on the back of the device. It can be released using an eyelet on the bottom. The optimized heat dissipation allows several units to be connected in a row without any problems

Quality – Made in Germany

In order to guarantee a consistently high quality of the Profi Line Converter, all versions are manufactured in Hamm, Germany.

Here, all devices are subjected to a so-called burn-in test, which guarantees the reliability of the switch in long-term operation. For this purpose, the switches are tested for a longer period of time in permanent operation (approx. 48 h) under high load to check their functionality. In this way, we are able to detect early failures even before delivery.

Safety Instructions

DANGER! Optical components can emit laser light.

Attention: Infrared light, which is used for data transmission in a fiber optic network, is not visible to the human eye, but can still cause damage.

To avoid damage to the eyes:

- Never look directly with the eye into the outputs of optical components or fiber optics. Risk of blindness!
- Cover all unused optical connections with caps.
- Do not put the transmission line into operation until all connections have been made

The active laser technology used in this product complies with **Laser-Class 1**

Order Information

Description	Art.-No.
Profi Line Converter RS-232/FO 1x RS-232, 1x FO 1310nm Multimode SC duplex, DIN-Rail, RC	**MS650143**
Profi Line Converter RS-232/FO 1x RS-232, 1x FO 1310nm Multimode ST duplex, DIN-Rail, RC	**MS650142**
Profi Line Converter RS-232/FO 1x RS-232, 1x FO 1310nm SingleMode SC duplex 15km, DIN-Rail, RC	**MS650147**
Profi Line Converter RS-232/FO 1x RS-232, 1x FO 1310nm SingleMode ST duplex 15km, DIN-Rail, RC	**MS650145**
Profi Line Converter RS-232/FO 1x RS-232, 1x FO 1310nm SingleMode SC duplex 40km, DIN-Rail, RC	**MS650146**
Profi Line Converter RS-232/FO 1x RS-232, 1x FO 1310nm SingleMode ST duplex 40km, DIN-Rail, RC	**MS650140**
Profi Line Converter RS-232/FO 1x RS-232, 1x FO 1550nm SingleMode SC duplex 80km, DIN-Rail, RC	**MS650148**

Accessories

Description	Art.-No.
external power supplies for industrial use 24 VDC	
Industrial DIN-Rail power supply 24VDC/1,25A (30W) Input 100..240VAC/120..375VDC, Out: 24..28VDC, -20..+70°C	**MS700440**

Service

Description	Art.-No.
Warranty extension after 24-month manufacturer's warranty **	
Warranty extension by 1 year	**MSGV01**
Warranty extension by 2 years	**MSGV02**
Warranty extension by 3 years	**MSGV03**

** The manufacturer's warranty is defined in the general terms and conditions AGB (§9) of MICROSENS GmbH & Co. KG.